Sitara™ AM335x ARM® Cortex™-A8 Microprocessors (MPUs)

Check for Samples: AM3359, AM3358

1 Device Summary

1.1 Features

- **Highlights**
  - **Up to 1-GHz Sitara™ ARM® Cortex™-A8 32-Bit RISC Microprocessor**
    - **NEON™ SIMD Coprocessor**
    - **32KB of L1 Instruction and 32KB Data Cache with Single-Error Detection (parity)**
    - **256KB of L2 Cache with Error Correcting Code (ECC)**
  - **mDDR(LPDDR), DDR2, DDR3, DDR3L Support**
  - **General-Purpose Memory Support (NAND, NOR, SRAM) Supporting Up to 16-bit ECC**
  - **SGX530 3D Graphics Engine**
  - **LCD and Touchscreen Controller**
  - **Programmable Real-Time Unit and Industrial Communication Subsystem (PRU-ICSS)**
  - **Real-Time Clock (RTC)**
  - **Up to Two USB 2.0 High-Speed OTG Ports with Integrated PHY**
  - **10, 100, 1000 Ethernet Switch Supporting Up to Two Ports**
  - **Serial Interfaces Including:**
    - **Two Controller Area Network Ports (CAN)**
    - **Six UARTs, Two McASPs, Two McSPI, and Three I2C Ports**
  - **12-Bit Successive Approximation Register (SAR) ADC**
  - **Up to Three 32-Bit Enhanced Capture Modules (eCAP)**
  - **Up to Three Enhanced High-Resolution PWM Modules (eHRPWM)**
  - **Crypto Hardware Accelerators (AES, SHA, PKA, RNG)**
- **MPU Subsystem**
  - **Up to 1-GHz ARM® Cortex™-A8 32-Bit RISC Microprocessor**
  - **NEON™ SIMD Coprocessor**
  - **32KB of L1 Instruction Cache with Single-Error Detection (parity)**
  - **32KB of L1 Data Cache with Single Error-Detection (parity)**
  - **256KB of L2 Cache with Error Correcting Code (ECC)**
  - **176KB of On-Chip Boot ROM**
  - **64KB of Dedicated RAM**
  - **Emulation and Debug**
    - **JTAG**
  - **Interrupt Controller (up to 128 interrupt requests)**
- **On-Chip Memory (Shared L3 RAM)**
  - **64 KB of General-Purpose On-Chip Memory Controller (OCMC) RAM**
  - **Accessible to all Masters**
  - **Supports Retention for Fast Wake-Up**
- **External Memory Interfaces (EMIF)**
  - **mDDR(LPDDR), DDR2, DDR3, DDR3L Controller:**
    - **mDDR: 200-MHz Clock (400-MHz Data Rate)**
    - **DDR2: 266-MHz Clock (532-MHz Data Rate)**
    - **DDR3: 400-MHz Clock (800-MHz Data Rate)**
    - **DDR3L: 400-MHz Clock (800-MHz Data Rate)**
    - **16-Bit Data Bus**
    - **1 GB of Total Addressable Space**
    - **Supports One x16 or Two x8 Memory Device Configurations**
  - **General-Purpose Memory Controller (GPMC)**
    - **Flexible 8-Bit and 16-Bit Asynchronous Memory Interface with Up to seven Chip Selects (NAND, NOR, Muxed-NOR, SRAM)**
    - **Uses BCH Code to Support 4-Bit, 8-Bit, or 16-Bit ECC**
    - **Uses Hamming Code to Support 1-Bit ECC**
  - **Error Locator Module (ELM)**
    - **Used in Conjunction with the GPMC to**

Please be aware that an important notice concerning availability, standard warranty, and use in critical applications of Texas Instruments semiconductor products and disclaimers thereto appears at the end of this data sheet.

Sitara, SmartReflex, DSP/BIOS, XDS are trademarks of Texas Instruments.
Cortex, NEON are trademarks of ARM Ltd or its subsidiaries.
ARM is a registered trademark of ARM Ltd or its subsidiaries.
EtherCAT is a registered trademark of EtherCAT Technology Group.
POWERVR SGX is a trademark of Imagination Technologies Limited.
All other trademarks are the property of their respective owners.

PRODUCTION DATA information is current as of publication date. Products conform to specifications per the terms of the Texas Instruments standard warranty. Production processing does not necessarily include testing of all parameters.

Copyright © 2011–2013, Texas Instruments Incorporated

Locate Addresses of Data Errors from Syndrome Polynomials Generated Using a BCH Algorithm
    - Supports 4-Bit, 8-Bit, and 16-Bit per 512-byte Block Error Location Based on BCH Algorithms
- Programmable Real-Time Unit and Industrial Communication Subsystem (PRU-ICSS)
  - Supports protocols such as EtherCAT®, PROFIBUS, PROFINET, EtherNet/IP™, and more
  - Peripherals Inside the PRU-ICSS
    - One UART Port with Flow Control Pins, Supports Up to 12 Mbps
    - Two MII Ethernet Ports that Support Industrial Ethernet, such as EtherCAT
    - One MDIO Port
    - One Enhanced Capture (eCAP) Module
- Power Reset and Clock Management (PRCM) Module
  - Controls the entry and Exit of Stand-By and Deep-Sleep Modes
  - Responsible for Sleep Sequencing, Power Domain Switch-Off Sequencing, Wake-Up Sequencing and Power Domain Switch-On Sequencing
  - Clocks
    - Integrated 15-35 MHz High-Frequency Oscillator Used to Generate a Reference Clock for Various System and Peripheral Clocks
    - Supports Individual Clock Enable and Disable Control for Subsystems and Peripherals to Facilitate Reduced Power Consumption
    - Five ADPLLs to Generate System Clocks (MPU Subsystem, DDR Interface, USB and Peripherals [MMC and SD, UART, SPI, I2C], L3, L4, Ethernet, GFX [SGX530], LCD Pixel Clock)
  - Power
    - Two Non-Switchable Power Domains (Real-Time Clock [RTC], Wake-Up Logic [WAKE-UP])
    - Three Switchable Power Domains (MPU Subsystem [MPU], SGX530 [GFX], Peripherals and Infrastructure [PER])
    - Implements SmartReflex™ Class 2B for Core Voltage Scaling Based On Die Temperature, Process Variation and Performance (Adaptive Voltage Scaling [AVS])
    - Dynamic Voltage Frequency Scaling (DVFS)
- Real-Time Clock (RTC)
  - Real-Time Date (Day-Month-Year-Day of Week) and Time (Hours-Minutes-Seconds) Information
  - Internal 32.768-kHz Oscillator, RTC Logic and 1.1-V Internal LDO
  - Independent Power-on-Reset (RTC_PWRONRSTn) Input
  - Dedicated Input Pin (EXT_WAKEUP) for External Wake Events
  - Programmable Alarm Can be Used to Generate Internal Interrupts to the PRCM (for Wake Up) or Cortex-A8 (for Event Notification)
  - Programmable Alarm Can be Used with External Output (PMIC_POWER_EN) to Enable the Power Management IC to Restore Non-RTC Power Domains
- Peripherals
  - Up to Two USB 2.0 High-Speed OTG Ports with Integrated PHY
  - Up to Two Industrial Gigabit Ethernet MACs (10, 100, 1000 Mbps)
    - Integrated Switch
    - Each MAC Supports MII, RMII, RGMII and MDIO Interfaces
    - Ethernet MACs and Switch Can Operate Independent of Other Functions
    - IEEE 1588v2 Precision Time Protocol (PTP)
  - Up to Two Controller-Area Network (CAN) Ports
    - Supports CAN Version 2 Parts A and B
  - Up to Two Multichannel Audio Serial Ports (McASP)
    - Transmit and Receive Clocks Up to 50 MHz
    - Up to Four Serial Data Pins per McASP Port with Independent TX and RX Clocks
    - Supports Time Division Multiplexing (TDM), Inter-IC Sound (I2S), and similar Formats
    - Supports Digital Audio Interface Transmission (SPDIF, IEC60958-1, and AES-3 Formats)
    - FIFO Buffers for Transmit and Receive (256 bytes)
  - Up to Six UARTs
    - All UARTs Support IrDA and CIR Modes
    - All UARTs Support RTS and CTS Flow Control
    - UART1 Supports Full Modem control
  - Up to Two Master and Slave McSPI Serial Interfaces
    - Up to Two Chip Selects
    - Up to 48 MHz
  - Up to Three MMC, SD, and SDIO Ports

Copyright © 2011–2013, Texas Instruments Incorporated

- 1-Bit, 4-Bit and 8-Bit MMC, SD, and SDIO Modes
- MMCSD0 has dedicated Power Rail for 1.8-V or 3.3-V Operation
- Up to 48-MHz Data Transfer Rate
- Supports Card Detect and Write Protect
- Complies with MMC4.3 and SD and SDIO 2.0 Specifications

– Up to Three I2C Master and Slave Interfaces
  - Standard Mode (up to 100 kHz)
  - Fast Mode (up to 400 kHz)

– Up to Four Banks of General-Purpose IO (GPIO)
  - 32 GPIOs per Bank (Multiplexed with Other Functional Pins)
  - GPIOs Can be Used as Interrupt Inputs (Up to Two Interrupt Inputs per Bank)

– Up to Three External DMA Event Inputs That Can Also be Used as Interrupt Inputs

– Eight 32-Bit General-Purpose Timers
  - DMTIMER1 is a 1-ms Timer Used for Operating System (OS) Ticks
  - DMTIMER4 - DMTIMER7 are Pinned Out

– One Watchdog Timer

– SGX530 3D Graphics Engine
  - Tile-Based Architecture Delivering Up to 20 Million Polygons per second
  - Universal Scalable Shader Engine is a Multi-Threaded Engine Incorporating Pixel and Vertex Shader Functionality
  - Advanced Shader Feature Set in Excess of Microsoft VS3.0, PS3.0 and OGL2.0
  - Industry Standard API Support of Direct3D Mobile, OGL-ES 1.1 and 2.0, OpenVG 1.0, and OpenMax
  - Fine-Grained Task Switching, Load Balancing and Power Management
  - Advanced Geometry DMA Driven Operation for Minimum CPU Interaction
  - Programmable High-Quality Image Anti-Aliasing
  - Fully Virtualized Memory Addressing for OS Operation in a Unified Memory Architecture

– LCD Controller
  - Up to 24-Bits Data Output; 8-Bits per Pixel (RGB)
  - Resolution Up to 2048x2048 (With Maximum 126-MHz Pixel Clock)
  - Integrated LCD Interface Display Driver (LIDD) Controller
  - Integrated Raster Controller
  - Integrated DMA Engine to Pull Data from the External Frame Buffer without Burdening the Processor via Interrupts or a Firmware Timer
  - 512-Word Deep Internal FIFO
  - Supported Display Types:
    – Character Displays - Uses LCD Interface Display Driver (LIDD) Controller to Program these Displays
    – Passive Matrix LCD Displays - Uses LCD Raster Display Controller to Provide Timing and Data for Constant Graphics Refresh to a Passive Display
    – Active Matrix LCD Displays - Uses External Frame Buffer Space and the Internal DMA Engine to Drive Streaming Data to the Panel

– 12-Bit Successive Approximation Register (SAR) ADC
  - 200K Samples per Second
  - Input Can be Selected from any of the Eight Analog Inputs Multiplexed Through an 8:1 analog Switch
  - Can be Configured to Operate as a 4-wire, 5-wire, or 8-wire Resistive Touch Screen Controller (TSC) Interface

– Up to Three 32-Bit Enhanced Capture Modules (eCAP)
  - Configurable as Three Capture Inputs or Three Auxiliary PWM Outputs

– Up to Three Enhanced High-Resolution PWM Modules (eHRPWM)
  - Dedicated 16-Bit Time-Base Counter with Time and Frequency Controls
  - Configurable as Six Single-Ended, Six Dual-Edge Symmetric, or Three Dual-Edge Asymmetric Outputs

– Up to Three 32-Bit Enhanced Quadrature Encoder Pulse (eQEP) Modules

- Device Identification
  – Contains Electrical fuse Farm (FuseFarm) of Which Some Bits are Factory Programmable
    - Production ID
    - Device Part Number (Unique JTAG ID)
    - Device Revision (readable by Host ARM)
- Debug Interface Support
  – JTAG and cJTAG for ARM (Cortex-A8 and PRCM), PRU-ICSS Debug
  – Supports Device Boundary Scan
  – Supports IEEE 1500
- DMA
  – On-Chip Enhanced DMA Controller (EDMA) has Three Third-Party Transfer Controllers (TPTC) and One Third-Party Channel Controller (TPCC), Which Supports Up to 64 Programmable Logical Channels and Eight QDMA Channels. EDMA is Used for:
    - Transfers to and from On-Chip Memories

Copyright © 2011–2013, Texas Instruments Incorporated

- Transfers to and from External Storage (EMIF, General-Purpose Memory Controller, Slave Peripherals)
- Inter-Processor Communication (IPC)
  - Integrates Hardware-Based Mailbox for IPC and Spinlock for Process Synchronization Between the Cortex-A8, PRCM, and PRU-ICSS
    - Mailbox Registers that Generate Interrupts
      - Four Initiators (Cortex-A8, PRCM, PRU0, PRU1)
    - Spinlock has 128 Software-Assigned Lock Registers
- Security
  - Crypto Hardware Accelerators (AES, SHA, PKA, RNG)
- Boot Modes
  - Boot Mode is Selected via Boot Configuration Pins Latched on the Rising Edge of the PWRONRSTn Reset Input Pin
- Packages:
  - 298-Pin S-PBGA-N298 Via Channel™ package (ZCE Suffix), 0.65-mm Ball Pitch
  - 324-Pin S-PBGA-N324 package (ZCZ Suffix), 0.80-mm Ball Pitch

1.2 Applications

- Gaming Peripherals
- Home and Industrial Automation
- Consumer Medical Appliances
- Printers
- Smart Toll Systems
- Connected Vending Machines
- Weighing Scales
- Educational Consoles
- Advanced Toys

Copyright © 2011–2013, Texas Instruments Incorporated

1.3 Description

The AM335x microprocessors, based on the ARM Cortex-A8, are enhanced with image, graphics processing, peripherals and industrial interface options such as EtherCAT and PROFIBUS. The device supports the following high-level operating systems (HLOSs) that are available free of charge from TI:

- Linux®
- Android™

The AM335x microprocessor contains these subsystems:

- Microprocessor unit (MPU) subsystem based on the ARM Cortex-A8 microprocessor.
- POWERVR SGX™ Graphics Accelerator subsystem for 3D graphics acceleration to support display and gaming effects.
- The Programmable Real-Time Unit and Industrial Communication Subsystem (PRU-ICSS) is separate from the ARM core, allowing independent operation and clocking for greater efficiency and flexibility. The PRU-ICSS enables additional peripheral interfaces and real-time protocols such as EtherCAT, PROFINET, EtherNet/IP, PROFIBUS, Ethernet Powerlink, Sercos, and others.

Copyright © 2011–2013, Texas Instruments Incorporated

1.4 Functional Block Diagram

The AM335x microprocessor functional block diagram is shown in Figure 1-1.

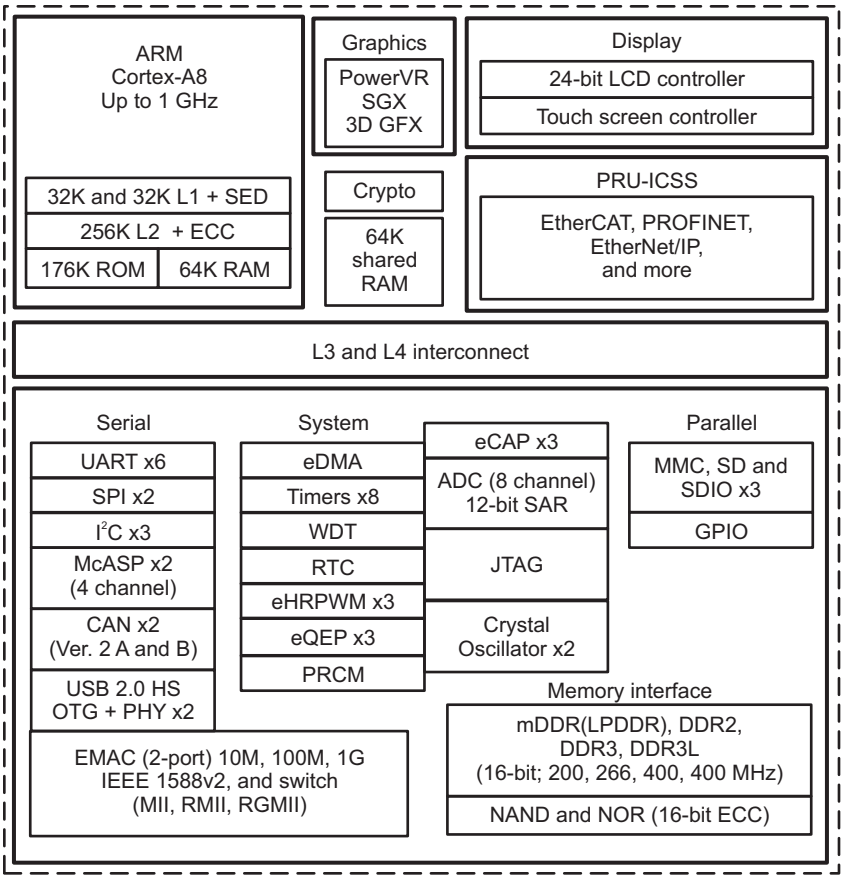

Figure 1-1. AM335x Functional Block Diagram

Copyright © 2011–2013, Texas Instruments Incorporated

1 Device Summary **1**
1.1 Features 1
1.2 Applications 4
1.3 Description 5
1.4 Functional Block Diagram 6
Revision History **8**
2 Terminal Description **10**
2.1 Pin Assignments 10
2.2 Ball Characteristics 18
2.3 Signal Description 51
3 Device Operating Conditions **80**
3.1 Absolute Maximum Ratings 80
3.2 Recommended Operating Conditions 82
3.3 DC Electrical Characteristics 90
3.4 External Capacitors 94
3.5 Touchscreen Controller and Analog-to-Digital Subsystem Electrical Parameters 97
4 Power and Clocking **99**
4.1 Power Supplies 99
4.2 Clock Specifications 106
5 Peripheral Information and Timings **115**
5.1 Parameter Information 115
5.2 Recommended Clock and Control Signal Transition Behavior 115
5.3 Controller Area Network (CAN) 116
5.4 DMTimer 117
5.5 Ethernet Media Access Controller (EMAC) and Switch 118
5.6 External Memory Interfaces 126
5.7 Inter-Integrated Circuit (I2C) 189
5.8 JTAG Electrical Data and Timing 191
5.9 LCD Controller (LCDC) 192
5.10 Multichannel Audio Serial Port (McASP) 208
5.11 Multichannel Serial Port Interface (McSPI) 213
5.12 Multimedia Card (MMC) Interface 219
5.13 Universal Asynchronous Receiver Transmitter (UART) 222
6 Device and Documentation Support **225**
6.1 Device Support 225
6.2 Documentation Support 226
7 Mechanical Packaging and Orderable Information **228**
7.1 Thermal Data for ZCE and ZCZ Packages 228
7.2 Via Channel 228
7.3 Packaging Information 228

Copyright © 2011–2013, Texas Instruments Incorporated

Revision History

NOTE: Page numbers for previous revisions may differ from page numbers in the current version.

Changes from Revision E (January 2013) to Revision F **Page**

- Changed device status to Production Data 1
- Changed ARM speeds features list item 1
- Changed MPU Subsystem speeds features list item 1
- Changed Features list item for DDR3 1
- Changed Features list item for DDR3L 1
- Changed Figure 1-1, AM335x Functional Block Diagram 6
- Changed Type value to I for Mode 2 (uart5_rxd) in Table 2-7, Ball Characteristics (ZCE and ZCZ Packages) 37
- Added Footnote (3) in Table 2-7, Ball Characteristics (ZCE and ZCZ Packages) 49
- Changed Footnote (4) in Table 2-7, Ball Characteristics (ZCE and ZCZ Packages) 49
- Added RTC_PORz Signal Name to Table 2-17, Miscellaneous/Miscellaneous Signals Description 60
- Deleted ESD-CDM (Charged-Device Model) Corner Terminals Parameter and changed MIN value for Latch-up Performance Parameter in Table 3-1 80
- Changed DDR3, DDR3L value for OPP100 and deleted Footnote (3) in Table 3-2, VDD_CORE Operating Performance Points for ZCZ Package with Device Revision Code "Blank" 82
- Deleted OPP50 row from Table 3-3, VDD_MPU Operating Performance Points for ZCZ Package with Device Revision Code "Blank" 82
- Added Table 3-4, Valid Combinations of VDD_CORE and VDD_MPU Operating Performance Points for ZCZ Package with Device Revision Code "Blank" 82
- Changed DDR3, DDR3L value for OPP100, deleted Footnote (4) and deleted OPP50 row from Table 3-5, VDD_CORE Operating Performance Points for ZCE Package with Device Revision Code "Blank" 83
- Changed DDR3, DDR3L value for OPP100 and deleted Footnote (3) in Table 3-6, VDD_CORE Operating Performance Points for ZCZ Package with Device Revision Code "A" or Newer 84
- Changed Table 3-7, VDD_MPU Operating Performance Points for ZCZ Package with Device Revision Code "A" or Newer 84
- Added Table 3-8, Valid Combinations of VDD_CORE and VDD_MPU Operating Performance Points for ZCZ Package with Device Revision Code "A" or Newer 84
- Changed DDR3, DDR3L value for OPP100 and deleted Footnote (4) in Table 3-9, VDD_CORE Operating Performance Points for ZCE Package with Device Revision Code "A" or Newer 85
- Added VDD_MPU Nitro Description and MAX value in Table 3-10, Maximum Current Ratings at AM335x Power Terminals 86
- Changed MAX value for VDDS_DDR Supply in Table 3-10, Maximum Current Ratings at AM335x Power Terminals 86
- Added paragraphs in the POH section before and after Table 3-11, Reliability Data 87
- Added Operating Condition Nitro to Table 3-11, Reliability Data 87
- Added MIN, NOM, and MAX for VDD_MPU Nitro mode; deleted values from USB0_ID and USB1_ID; added Footnote (7) in Table 3-12, Recommended Operating Conditions 87
- Changed V_{OH}, V_{OL}, I_I and I_{OZ} Parameter values in Table 3-13, DC Electrical Characteristics Over Recommended Ranges of Supply Voltage and Operating Temperature 90
- Deleted TYP value for C_{VDDS_DDR} Parameter in Table 3-15, Power-Supply Decoupling Capacitor Characteristics ... 94
- Changed second paragraph in Section 4.2.2.3, OSC1 Internal Oscillator Clock Source 110
- Changed second paragraph in Section 4.2.2.4, OSC1 LVCMOS Digital Clock Source 112
- Added Section 5.4, DMTimer 117
- Added OPP50 MIN values for all parameters and changed OPP100 MIN value for Parameters F13 and F22 in Table 5-21, GPMC and NOR Flash Timing Requirements—Synchronous Mode 126
- Added OPP50 MIN and MAX values and changed MIN values of OPP100 Parameters F7 and F8 in Table 5-22, GPMC and NOR Flash Switching Characteristics—Synchronous Mode 127
- Changed OPP50 MIN and MAX Parameter values in Table 5-26, GPMC and NOR Flash Switching Characteristics—Asynchronous Mode 136
- Changed OPP50 MIN and MAX Parameter values in Table 5-30, GPMC and NAND Flash Switching Characteristics—Asynchronous Mode 145
- Changed MIN value for Parameter 1 in Table 5-56, Switching Characteristics for DDR3 Memory Interface 170
- Added Conditions to Parameter 1 and deleted Footnote in Table 5-58, Compatible JEDEC DDR3 Devices (Per Interface) 174
- Changed Footnote (12) in Table 5-66, CK and ADDR_CTRL Routing Specification 187
- Changed Footnote (11) in Table 5-67, DQS[x] and DQ[x] Routing Specification 188

Copyright © 2011–2013, Texas Instruments Incorporated

- Deleted MIN values for Parameters 9-12 in Table 5-69, Timing Requirements for I2C Input Timings 189
- Added Section 5.8, JTAG Electrical Data and Timing 191
- Changed MIN values of Parameters 5, 6, 8, and 10 and MAX values of Parameters 4, 6, 8, and 10 in Table 5-76, Switching Characteristics for LCD Raster Mode 202
- Added OPP50 MIN and MAX Parameter values and changed OPP100 Parameters 6 and 8 MIN values in Table 5-78, Timing Requirements for McASP 209
- Added OPP50 MIN and MAX Parameter values and changed OPP100 Parameters 13, 14 and 15 MIN values in Table 5-79, Switching Characteristics for McASP 211
- Added OPP50 MIN and MAX Parameter values to Table 5-81, Timing Requirements for McSPI Input Timings—Slave Mode 213
- Added OPP50 MIN and MAX Parameter values to Table 5-82, Switching Characteristics for McSPI Output Timings—Slave Mode 213
- Changed Input Parameters High Load MAX values in Table 5-83, McSPI Timing Conditions—Master Mode 216
- Added OPP50 MIN and MAX Parameter values and changed OPP100 Parameter 5 MIN values in Table 5-84, Timing Requirements for McSPI Input Timings—Master Mode 216
- Added OPP50 MIN and MAX Parameter values and changed OPP100 Parameters 2 and 3 MAX values in Table 5-85, Switching Characteristics for McSPI Output Timings—Master Mode 216
- Changed MIN value for Parameters 2 and 4 in Table 5-87, Timing Requirements for MMC[x]_CMD and MMC[x]_DAT[7:0] 219
- Added OPP50 MIN, TYP, and MAX Parameter values to Table 5-89, Switching Characteristics for MMC[x]_CMD and MMC[x]_DAT[7:0]—Standard Mode 220
- Added OPP50 MIN, TYP, and MAX Parameter values to Table 5-90, Switching Characteristics for MMC[x]_CMD and MMC[x]_DAT[7:0]—High-Speed Mode 221
- Changed Figure 6-1, AM335x Device Nomenclature 226
- Added paragraph to Section 7.1, Thermal Data for ZCE and ZCZ Packages 228

Copyright © 2011–2013, Texas Instruments Incorporated

2 Terminal Description

2.1 Pin Assignments

NOTE

The terms "ball", "pin", and "terminal" are used interchangeably throughout the document. An attempt is made to use "ball" only when referring to the physical package.

2.1.1 ZCE Package Pin Maps (Top View)

The pin maps below show the pin assignments on the ZCE package in three sections (left, middle, and right).

Copyright © 2011–2013, Texas Instruments Incorporated

Table 2-1. ZCE Pin Map [Section Left - Top View]

	A	B	C	D	E	F
19	VSS	I2C0_SCL	UART1_TXD	UART1_RTSn	UART0_RXD	UART0_CTSn
18	SPI0_SCLK	SPI0_D0	I2C0_SDA	UART1_RXD	ECAP0_IN_PWM0_OUT	UART0_RTSn
17	SPI0_CS0	SPI0_D1	EXTINTn	XXXX	UART1_CTSn	UART0_TXD
16	WARMRSTn	SPI0_CS1	XXXX	XXXX	XXXX	VDDS
15	EMU0	XDMA_EVENT_INTR1	XDMA_EVENT_INTR0	XXXX	PWRONRSTn	XXXX
14	TDO	TCK	TMS	EMU1	XXXX	VDDSHV6
13	TRSTn	TDI	CAP_VBB_MPU	CAP_VDD_SRAM_MPU	VDDSHV6	VSS
12	AIN7	AIN5	VDDS_SRAM_MPU_BB	VDDS	VDDSHV6	VSS
11	AIN1	AIN3	XXXX	XXXX	VDDSHV6	VDD_CORE
10	AIN6	CAP_VDD_SRAM_CORE	VDDS_SRAM_CORE_BG	VSS	VSS	XXXX
9	VREFP	VREFN	XXXX	XXXX	VSS	VDD_CORE
8	AIN2	AIN0	AIN4	VSSA_ADC	VSS	VSS
7	RTC_KALDO_ENn	RTC_PWRONRSTn	PMIC_POWER_EN	VDDA_ADC	VSS	VSS
6	RTC_XTALIN	RESERVED	VDDS_RTC	CAP_VDD_RTC	XXXX	VSS
5	RTC_XTALOUT	EXT_WAKEUP	VDDS_PLL_DDR	XXXX	DDR_A4	XXXX
4	DDR_WEn	DDR_BA2	XXXX	XXXX	XXXX	DDR_A12
3	DDR_BA0	DDR_A3	DDR_A8	XXXX	DDR_A15	DDR_A0
2	DDR_A5	DDR_A9	DDR_CK	DDR_A7	DDR_A10	DDR_RASn
1	VSS	DDR_A6	DDR_CKn	DDR_A2	DDR_BA1	DDR_CASn

Pin map section location

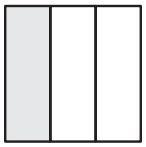

Left

Table 2-2. ZCE Pin Map [Section Middle - Top View]

	G	H	J	K	L	M
19	MMC0_CLK	MMC0_DAT3	MII1_COL	MII1_RX_ER	MII1_RX_DV	MII1_RX_CLK
18	MMC0_DAT0	MMC0_DAT2	MII1_CRS	RMII1_REF_CLK	MII1_TXD0	MII1_TXD1
17	MMC0_CMD	MMC0_DAT1	XXXX	MII1_TX_EN	XXXX	MII1_TXD3
16	USB0_DRVVBUS	VDDS_PLL_MPU	XXXX	VDD_CORE	XXXX	VDDS
15	VDDSHV4	VDDSHV4	VSS	VDD_CORE	VSS	VDDSHV5
14	XXXX	VDDSHV4	VSS	XXXX	VSS	VDDSHV5
13	XXXX	VDD_CORE	VDD_CORE	XXXX	VDD_CORE	VDD_CORE
12	VSS	VDD_CORE	VDD_CORE	VSS	VDD_CORE	VDD_CORE
11	VDD_CORE	VSS	VSS	VSS	VSS	VSS
10	XXXX	VSS	XXXX	XXXX	XXXX	VSS
9	VDD_CORE	VSS	VSS	VSS	VSS	VSS
8	VSS	VDD_CORE	VDD_CORE	VSS	VDD_CORE	VDD_CORE
7	XXXX	VDD_CORE	VDD_CORE	XXXX	VDD_CORE	VDD_CORE
6	XXXX	VDDS_DDR	VSS	XXXX	VSS	VDDS_DDR
5	VDDS_DDR	VDDS_DDR	VSS	VDDS_DDR	VSS	VDDS_DDR
4	DDR_A11	DDR_VREF	XXXX	VDDS_DDR	XXXX	DDR_D11
3	DDR_CKE	DDR_A14	XXXX	DDR_DQM1	XXXX	DDR_D10
2	DDR_RESETn	DDR_CSn0	DDR_A1	DDR_D8	DDR_DQSn1	DDR_D12
1	DDR_ODT	DDR_A13	DDR_VTP	DDR_D9	DDR_DQS1	DDR_D13

Pin map section location

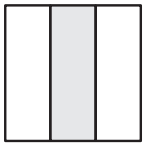

Middle

Copyright © 2011–2013, Texas Instruments Incorporated

Table 2-3. ZCE Pin Map [Section Right - Top View]

	N	P	R	T	U	V	W
19	MII1_TX_CLK	MII1_RXD1	MDC	USB0_VBUS	USB0_DP	USB0_ID	VSS
18	MII1_TXD2	MII1_RXD0	VDDA3P3V_USB0	USB0_CE	USB0_DM	GPMC_BEn1	GPMC_WPn
17	MII1_RXD3	MDIO	VDDA1P8V_USB0	XXXX	GPMC_CSn3	GPMC_AD15	GPMC_AD14
16	MII1_RXD2	VSSA_USB	XXXX	XXXX	XXXX	GPMC_CLK	GPMC_AD9
15	VDDSHV5	XXXX	GPMC_WAIT0	XXXX	GPMC_CSn2	GPMC_AD8	GPMC_AD7
14	XXXX	VSS	XXXX	VDDS	GPMC_AD6	GPMC_CSn1	GPMC_AD5
13	XXXX	VSS	VDDSHV1	GPMC_AD13	GPMC_AD12	GPMC_AD4	GPMC_AD3
12	VSS	VSS	VDDSHV1	GPMC_AD10	GPMC_AD11	GPMC_AD2	XTALOUT
11	VDD_CORE	VDD_CORE	VDDSHV1	XXXX	XXXX	VSS_OSC	XTALIN
10	XXXX	XXXX	VSS	VSS	VDDS_OSC	GPMC_ADVn_ALE	GPMC_AD0
9	VDD_CORE	VDD_CORE	VDDSHV1	XXXX	XXXX	GPMC_AD1	GPMC_OEn_REn
8	VSS	VSS	VDDSHV1	VDDS_PLL_CORE_LCD	GPMC_WEn	GPMC_BEn0_CLE	GPMC_CSn0
7	XXXX	VSS	VDDSHV6	LCD_HSYNC	LCD_VSYNC	LCD_DATA15	LCD_AC_BIAS_EN
6	XXXX	VDDSHV6	XXXX	VDDS	LCD_DATA13	LCD_DATA12	LCD_DATA14
5	VDDS_DDR	XXXX	VPP	XXXX	LCD_DATA10	LCD_DATA11	LCD_PCLK
4	DDR_D0	DDR_D1	XXXX	XXXX	XXXX	LCD_DATA8	LCD_DATA9
3	DDR_DQM0	DDR_D4	DDR_D7	XXXX	LCD_DATA7	LCD_DATA6	LCD_DATA5
2	DDR_D14	DDR_D2	DDR_DQSn0	DDR_D6	LCD_DATA1	LCD_DATA3	LCD_DATA4
1	DDR_D15	DDR_D3	DDR_DQS0	DDR_D5	LCD_DATA0	LCD_DATA2	VSS

Pin map section location

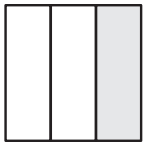

Right

2.1.2 ZCZ Package Pin Maps (Top View)

The pin maps below show the pin assignments on the ZCZ package in three sections (left, middle, and right).

Copyright © 2011–2013, Texas Instruments Incorporated

Table 2-4. ZCZ Pin Map [Section Left - Top View]

	A	B	C	D	E	F
18	VSS	EXTINTn	ECAP0_IN_PWM0_OUT	UART1_CTSn	UART0_CTSn	MMC0_DAT2
17	SPI0_SCLK	SPI0_D0	I2C0_SDA	UART1_RTSn	UART0_RTSn	MMC0_DAT3
16	SPI0_CS0	SPI0_D1	I2C0_SCL	UART1_RXD	UART0_TXD	USB0_DRVVBUS
15	XDMA_EVENT_INTR0	PWRONRSTn	SPI0_CS1	UART1_TXD	UART0_RXD	USB1_DRVVBUS
14	MCASP0_AHCLKX	EMU1	EMU0	XDMA_EVENT_INTR1	VDDS	VDDSHV6
13	MCASP0_ACLKX	MCASP0_FSX	MCASP0_FSR	MCASP0_AXR1	VDDSHV6	VDD_MPU
12	TCK	MCASP0_ACLKR	MCASP0_AHCLKR	MCASP0_AXR0	VDDSHV6	VDD_MPU
11	TDO	TDI	TMS	CAP_VDD_SRAM_MPU	VDDSHV6	VDD_MPU
10	WARMRSTn	TRSTn	CAP_VBB_MPU	VDDS_SRAM_MPU_BB	VDDSHV6	VDD_MPU
9	VREFN	VREFP	AIN7	CAP_VDD_SRAM_CORE	VDDS_SRAM_CORE_BG	VDDS
8	AIN6	AIN5	AIN4	VDDA_ADC	VSSA_ADC	VSS
7	AIN3	AIN2	AIN1	VDDS_RTC	VDDS_PLL_DDR	VDD_CORE
6	RTC_XTALIN	AIN0	PMIC_POWER_EN	CAP_VDD_RTC	VDDS	VDD_CORE
5	VSS_RTC	RTC_PWRONRSTn	EXT_WAKEUP	DDR_A6	VDDS_DDR	VDDS_DDR
4	RTC_XTALOUT	RTC_KALDO_ENn	DDR_BA0	DDR_A8	DDR_A2	DDR_A10
3	RESERVED	DDR_BA2	DDR_A3	DDR_A15	DDR_A12	DDR_A0
2	VDD_MPU_MON	DDR_WEn	DDR_A4	DDR_CK	DDR_A7	DDR_A11
1	VSS	DDR_A5	DDR_A9	DDR_CKn	DDR_BA1	DDR_CASn

Pin map section location

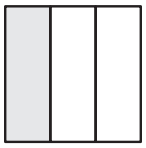

Left

Table 2-5. ZCZ Pin Map [Section Middle - Top View]

	G	H	J	K	L	M
18	MMC0_CMD	RMII1_REF_CLK	MII1_TXD3	MII1_TX_CLK	MII1_RX_CLK	MDC
17	MMC0_CLK	MII1_CRS	MII1_RX_DV	MII1_TXD0	MII1_RXD3	MDIO
16	MMC0_DAT0	MII1_COL	MII1_TX_EN	MII1_TXD1	MII1_RXD2	MII1_RXD0
15	MMC0_DAT1	VDDS_PLL_MPU	MII1_RX_ER	MII1_TXD2	MII1_RXD1	USB0_CE
14	VDDSHV6	VDDSHV4	VDDSHV4	VDDSHV5	VDDSHV5	VSSA_USB
13	VDD_MPU	VDD_MPU	VDD_MPU	VDDS	VSS	VDD_CORE
12	VSS	VSS	VDD_CORE	VDD_CORE	VSS	VSS
11	VSS	VDD_CORE	VSS	VSS	VSS	VDD_CORE
10	VDD_CORE	VSS	VSS	VSS	VSS	VSS
9	VSS	VSS	VSS	VSS	VDD_CORE	VSS
8	VSS	VSS	VSS	VDD_CORE	VDD_CORE	VSS
7	VDD_CORE	VSS	VSS	VSS	VDD_CORE	VSS
6	VDD_CORE	VSS	VSS	VDD_CORE	VDD_CORE	VSS
5	VDDS_DDR	VDDS_DDR	VDDS_DDR	VDDS_DDR	VDDS_DDR	VPP
4	DDR_RASn	DDR_A14	DDR_VREF	DDR_D12	DDR_D14	DDR_D1
3	DDR_CKE	DDR_A13	DDR_VTP	DDR_D11	DDR_D13	DDR_D0
2	DDR_RESETn	DDR_CSn0	DDR_DQM1	DDR_D10	DDR_DQSn1	DDR_DQM0
1	DDR_ODT	DDR_A1	DDR_D8	DDR_D9	DDR_DQS1	DDR_D15

Pin map section location

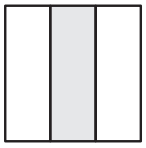

Middle

Copyright © 2011–2013, Texas Instruments Incorporated

Table 2-6. ZCZ Pin Map [Section Right - Top View]

	N	P	R	T	U	V
18	USB0_DM	USB1_CE	USB1_DM	USB1_VBUS	GPMC_BEn1	VSS
17	USB0_DP	USB1_ID	USB1_DP	GPMC_WAIT0	GPMC_WPn	GPMC_A11
16	VDDA1P8V_USB0	USB0_ID	VDDA1P8V_USB1	GPMC_A10	GPMC_A9	GPMC_A8
15	VDDA3P3V_USB0	USB0_VBUS	VDDA3P3V_USB1	GPMC_A7	GPMC_A6	GPMC_A5
14	VSSA_USB	VDDS	GPMC_A4	GPMC_A3	GPMC_A2	GPMC_A1
13	VDD_CORE	VDDSHV3	GPMC_A0	GPMC_CSn3	GPMC_AD15	GPMC_AD14
12	VDD_CORE	VDDSHV3	GPMC_AD13	GPMC_AD12	GPMC_AD11	GPMC_CLK
11	VSS	VDDSHV2	VDDS_OSC	GPMC_AD10	XTALOUT	VSS_OSC
10	VSS	VDDSHV2	VDDS_PLL_CORE_LCD	GPMC_AD9	GPMC_AD8	XTALIN
9	VDD_CORE	VDDS	GPMC_AD6	GPMC_AD7	GPMC_CSn1	GPMC_CSn2
8	VDD_CORE	VDDSHV1	GPMC_AD2	GPMC_AD3	GPMC_AD4	GPMC_AD5
7	VSS	VDDSHV1	GPMC_ADVn_ALE	GPMC_OEn_REn	GPMC_AD0	GPMC_AD1
6	VDDS	VDDSHV6	LCD_AC_BIAS_EN	GPMC_BEn0_CLE	GPMC_WEn	GPMC_CSn0
5	VDDSHV6	VDDSHV6	LCD_HSYNC	LCD_DATA15	LCD_VSYNC	LCD_PCLK
4	DDR_D5	DDR_D7	LCD_DATA3	LCD_DATA7	LCD_DATA11	LCD_DATA14
3	DDR_D4	DDR_D6	LCD_DATA2	LCD_DATA6	LCD_DATA10	LCD_DATA13
2	DDR_D3	DDR_DQSn0	LCD_DATA1	LCD_DATA5	LCD_DATA9	LCD_DATA12
1	DDR_D2	DDR_DQS0	LCD_DATA0	LCD_DATA4	LCD_DATA8	VSS

Pin map section location

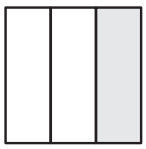

Right

2.2 Ball Characteristics

The *AM335x ARM Cortex-A8 Microprocessors (MPUs) Technical Reference Manual* (literature number SPRUH73) and this document may reference internal signal names when discussing peripheral input and output signals since many of the AM335x package terminals can be multiplexed to one of several peripheral signals. The following table has a Pin Name column that lists all device terminal names and a Signal Name column that lists all internal signal names multiplexed to each terminal which provides a cross reference of internal signal names to terminal names. This table also identifies other important terminal characteristics.

1. **BALL NUMBER:** Package ball numbers associated with each signals.
2. **PIN NAME:** The name of the package pin or terminal.
   Note: The table does not take into account subsystem terminal multiplexing options.
3. **SIGNAL NAME**: The signal name for that pin in the mode being used.
4. **MODE:** Multiplexing mode number.
   (a) Mode 0 is the primary mode; this means that when mode 0 is set, the function mapped on the terminal corresponds to the name of the terminal. There is always a function mapped on the primary mode. Notice that primary mode is not necessarily the default mode.

   Note: The default mode is the mode at the release of the reset; also see the RESET REL. MODE column.

   (b) Modes 1 to 7 are possible modes for alternate functions. On each terminal, some modes are effectively used for alternate functions, while some modes are not used and do not correspond to a functional configuration.
5. **TYPE:** Signal direction
   – I = Input
   – O = Output
   – IO = Input and Output
   – D = Open drain
   – DS = Differential
   – A = Analog
   – PWR = Power
   – GND = Ground

   Note: In the safe_mode, the buffer is configured in high-impedance.
6. **BALL RESET STATE:** State of the terminal while the active low PWRONRSTn terminal is low.
   – 0: The buffer drives V_{OL} (pulldown or pullup resistor not activated)
     0(PD): The buffer drives V_{OL} with an active pulldown resistor
   – 1: The buffer drives V_{OH} (pulldown or pullup resistor not activated)
     1(PU): The buffer drives V_{OH} with an active pullup resistor
   – Z: High-impedance
   – L: High-impedance with an active pulldown resistor
   – H : High-impedance with an active pullup resistor
7. **BALL RESET REL. STATE:** State of the terminal after the active low PWRONRSTn terminal transitions from low to high.
   – 0: The buffer drives V_{OL} (pulldown or pullup resistor not activated)
     0(PD): The buffer drives V_{OL} with an active pulldown resistor
   – 1: The buffer drives V_{OH} (pulldown or pullup resistor not activated)
     1(PU): The buffer drives V_{OH} with an active pullup resistor
   – Z: High-impedance.
   – L: High-impedance with an active pulldown resistor
   – H : High-impedance with an active pullup resistor
8. **RESET REL. MODE:** The mode is automatically configured after the active low PWRONRSTn terminal transitions from low to high.

 Copyright © 2011–2013, Texas Instruments Incorporated

9. **POWER:** The voltage supply that powers the terminal's IO buffers.
10. **HYS:** Indicates if the input buffer is with hysteresis.
11. **BUFFER STRENGTH:** Drive strength of the associated output buffer.
12. **PULLUP OR PULLDOWN TYPE:** Denotes the presence of an internal pullup or pulldown resistor. Pullup and pulldown resistors can be enabled or disabled via software.
13. **IO CELL:** IO cell information.

Note: Configuring two terminals to the same input signal is not supported as it can yield unexpected results. This can be easily prevented with the proper software configuration.

Table 2-7. Ball Characteristics (ZCE and ZCZ Packages)

ZCE BALL NUMBER [1]	ZCZ BALL NUMBER [1]	PIN NAME [2]	SIGNAL NAME [3]	MODE [4]	TYPE [5]	BALL RESET STATE [6]	BALL RESET REL. STATE [7]	RESET REL. MODE [8]	ZCE POWER / ZCZ POWER [9]	HYS [10]	BUFFER STRENGTH (mA) [11]	PULLUP /DOWN TYPE [12]	I/O CELL [13]
B8	B6	AIN0	AIN0	0	A (21)	Z	Z	0	VDDA_ADC / VDDA_ADC	NA	25	NA	Analog
A11	C7	AIN1	AIN1	0	A (20)	Z	Z	0	VDDA_ADC / VDDA_ADC	NA	25	NA	Analog
A8	B7	AIN2	AIN2	0	A (20)	Z	Z	0	VDDA_ADC / VDDA_ADC	NA	25	NA	Analog
B11	A7	AIN3	AIN3	0	A (19)	Z	Z	0	VDDA_ADC / VDDA_ADC	NA	25	NA	Analog
C8	C8	AIN4	AIN4	0	A (19)	Z	Z	0	VDDA_ADC / VDDA_ADC	NA	25	NA	Analog
B12	B8	AIN5	AIN5	0	A	Z	Z	0	VDDA_ADC / VDDA_ADC	NA	NA	NA	Analog
A10	A8	AIN6	AIN6	0	A	Z	Z	0	VDDA_ADC / VDDA_ADC	NA	NA	NA	Analog
A12	C9	AIN7	AIN7	0	A	Z	Z	0	VDDA_ADC / VDDA_ADC	NA	NA	NA	Analog
C13	C10	CAP_VBB_MPU	CAP_VBB_MPU	NA	A								
D6	D6	CAP_VDD_RTC	CAP_VDD_RTC	NA	A								
B10	D9	CAP_VDD_SRAM_CORE	CAP_VDD_SRAM_CORE	NA	A								
D13	D11	CAP_VDD_SRAM_MPU	CAP_VDD_SRAM_MPU	NA	A								
F3	F3	DDR_A0	ddr_a0	0	O	H	1	0	VDDS_DDR / VDDS_DDR	NA	8	PU/PD	LVCMOS/SSTL/ HSTL
J2	H1	DDR_A1	ddr_a1	0	O	H	1	0	VDDS_DDR / VDDS_DDR	NA	8	PU/PD	LVCMOS/SSTL/ HSTL
D1	E4	DDR_A2	ddr_a2	0	O	H	1	0	VDDS_DDR / VDDS_DDR	NA	8	PU/PD	LVCMOS/SSTL/ HSTL
B3	C3	DDR_A3	ddr_a3	0	O	H	1	0	VDDS_DDR / VDDS_DDR	NA	8	PU/PD	LVCMOS/SSTL/ HSTL
E5	C2	DDR_A4	ddr_a4	0	O	H	1	0	VDDS_DDR / VDDS_DDR	NA	8	PU/PD	LVCMOS/SSTL/ HSTL
A2	B1	DDR_A5	ddr_a5	0	O	H	1	0	VDDS_DDR / VDDS_DDR	NA	8	PU/PD	LVCMOS/SSTL/ HSTL
B1	D5	DDR_A6	ddr_a6	0	O	H	1	0	VDDS_DDR / VDDS_DDR	NA	8	PU/PD	LVCMOS/SSTL/ HSTL
D2	E2	DDR_A7	ddr_a7	0	O	H	1	0	VDDS_DDR / VDDS_DDR	NA	8	PU/PD	LVCMOS/SSTL/ HSTL
C3	D4	DDR_A8	ddr_a8	0	O	H	1	0	VDDS_DDR / VDDS_DDR	NA	8	PU/PD	LVCMOS/SSTL/ HSTL
B2	C1	DDR_A9	ddr_a9	0	O	H	1	0	VDDS_DDR / VDDS_DDR	NA	8	PU/PD	LVCMOS/SSTL/ HSTL
E2	F4	DDR_A10	ddr_a10	0	O	H	1	0	VDDS_DDR / VDDS_DDR	NA	8	PU/PD	LVCMOS/SSTL/ HSTL
G4	F2	DDR_A11	ddr_a11	0	O	H	1	0	VDDS_DDR / VDDS_DDR	NA	8	PU/PD	LVCMOS/SSTL/ HSTL

Copyright © 2011–2013, Texas Instruments Incorporated

Table 2-7. Ball Characteristics (ZCE and ZCZ Packages) (continued)

ZCE BALL NUMBER [1]	ZCZ BALL NUMBER [1]	PIN NAME [2]	SIGNAL NAME [3]	MODE [4]	TYPE [5]	BALL RESET STATE [6]	BALL RESET REL. STATE [7]	RESET REL. MODE [8]	ZCE POWER / ZCZ POWER [9]	HYS [10]	BUFFER STRENGTH (mA) [11]	PULLUP /DOWN TYPE [12]	I/O CELL [13]
F4	E3	DDR_A12	ddr_a12	0	O	H	1	0	VDDS_DDR / VDDS_DDR	NA	8	PU/PD	LVCMOS/SSTL/ HSTL
H1	H3	DDR_A13	ddr_a13	0	O	H	1	0	VDDS_DDR / VDDS_DDR	NA	8	PU/PD	LVCMOS/SSTL/ HSTL
H3	H4	DDR_A14	ddr_a14	0	O	H	1	0	VDDS_DDR / VDDS_DDR	NA	8	PU/PD	LVCMOS/SSTL/ HSTL
E3	D3	DDR_A15	ddr_a15	0	O	H	1	0	VDDS_DDR / VDDS_DDR	NA	8	PU/PD	LVCMOS/SSTL/ HSTL
A3	C4	DDR_BA0	ddr_ba0	0	O	H	1	0	VDDS_DDR / VDDS_DDR	NA	8	PU/PD	LVCMOS/SSTL/ HSTL
E1	E1	DDR_BA1	ddr_ba1	0	O	H	1	0	VDDS_DDR / VDDS_DDR	NA	8	PU/PD	LVCMOS/SSTL/ HSTL
B4	B3	DDR_BA2	ddr_ba2	0	O	H	1	0	VDDS_DDR / VDDS_DDR	NA	8	PU/PD	LVCMOS/SSTL/ HSTL
F1	F1	DDR_CASn	ddr_casn	0	O	H	1	0	VDDS_DDR / VDDS_DDR	NA	8	PU/PD	LVCMOS/SSTL/ HSTL
C2	D2	DDR_CK	ddr_ck	0	O	L	0	0	VDDS_DDR / VDDS_DDR	NA	8	PU/PD	LVCMOS/SSTL/ HSTL
G3	G3	DDR_CKE	ddr_cke	0	O	L	0	0	VDDS_DDR / VDDS_DDR	NA	8	PU/PD	LVCMOS/SSTL/ HSTL
C1	D1	DDR_CKn	ddr_nck	0	O	H	1	0	VDDS_DDR / VDDS_DDR	NA	8	PU/PD	LVCMOS/SSTL/ HSTL
H2	H2	DDR_CSn0	ddr_csn0	0	O	H	1	0	VDDS_DDR / VDDS_DDR	NA	8	PU/PD	LVCMOS/SSTL/ HSTL
N4	M3	DDR_D0	ddr_d0	0	I/O	L	Z	0	VDDS_DDR / VDDS_DDR	Yes	8	PU/PD	LVCMOS/SSTL/ HSTL
P4	M4	DDR_D1	ddr_d1	0	I/O	L	Z	0	VDDS_DDR / VDDS_DDR	Yes	8	PU/PD	LVCMOS/SSTL/ HSTL
P2	N1	DDR_D2	ddr_d2	0	I/O	L	Z	0	VDDS_DDR / VDDS_DDR	Yes	8	PU/PD	LVCMOS/SSTL/ HSTL
P1	N2	DDR_D3	ddr_d3	0	I/O	L	Z	0	VDDS_DDR / VDDS_DDR	Yes	8	PU/PD	LVCMOS/SSTL/ HSTL
P3	N3	DDR_D4	ddr_d4	0	I/O	L	Z	0	VDDS_DDR / VDDS_DDR	Yes	8	PU/PD	LVCMOS/SSTL/ HSTL
T1	N4	DDR_D5	ddr_d5	0	I/O	L	Z	0	VDDS_DDR / VDDS_DDR	Yes	8	PU/PD	LVCMOS/SSTL/ HSTL
T2	P3	DDR_D6	ddr_d6	0	I/O	L	Z	0	VDDS_DDR / VDDS_DDR	Yes	8	PU/PD	LVCMOS/SSTL/ HSTL
R3	P4	DDR_D7	ddr_d7	0	I/O	L	Z	0	VDDS_DDR / VDDS_DDR	Yes	8	PU/PD	LVCMOS/SSTL/ HSTL
K2	J1	DDR_D8	ddr_d8	0	I/O	L	Z	0	VDDS_DDR / VDDS_DDR	Yes	8	PU/PD	LVCMOS/SSTL/ HSTL
K1	K1	DDR_D9	ddr_d9	0	I/O	L	Z	0	VDDS_DDR / VDDS_DDR	Yes	8	PU/PD	LVCMOS/SSTL/ HSTL
M3	K2	DDR_D10	ddr_d10	0	I/O	L	Z	0	VDDS_DDR / VDDS_DDR	Yes	8	PU/PD	LVCMOS/SSTL/ HSTL

Copyright © 2011–2013, Texas Instruments Incorporated

Table 2-7. Ball Characteristics (ZCE and ZCZ Packages) (continued)

ZCE BALL NUMBER [1]	ZCZ BALL NUMBER [1]	PIN NAME [2]	SIGNAL NAME [3]	MODE [4]	TYPE [5]	BALL RESET STATE [6]	BALL RESET REL. STATE [7]	RESET REL. MODE [8]	ZCE POWER / ZCZ POWER [9]	HYS [10]	BUFFER STRENGTH (mA) [11]	PULLUP /DOWN TYPE [12]	I/O CELL [13]
M4	K3	DDR_D11	ddr_d11	0	I/O	L	Z	0	VDDS_DDR / VDDS_DDR	Yes	8	PU/PD	LVCMOS/SSTL/ HSTL
M2	K4	DDR_D12	ddr_d12	0	I/O	L	Z	0	VDDS_DDR / VDDS_DDR	Yes	8	PU/PD	LVCMOS/SSTL/ HSTL
M1	L3	DDR_D13	ddr_d13	0	I/O	L	Z	0	VDDS_DDR / VDDS_DDR	Yes	8	PU/PD	LVCMOS/SSTL/ HSTL
N2	L4	DDR_D14	ddr_d14	0	I/O	L	Z	0	VDDS_DDR / VDDS_DDR	Yes	8	PU/PD	LVCMOS/SSTL/ HSTL
N1	M1	DDR_D15	ddr_d15	0	I/O	L	Z	0	VDDS_DDR / VDDS_DDR	Yes	8	PU/PD	LVCMOS/SSTL/ HSTL
N3	M2	DDR_DQM0	ddr_dqm0	0	O	H	1	0	VDDS_DDR / VDDS_DDR	NA	8	PU/PD	LVCMOS/SSTL/ HSTL
K3	J2	DDR_DQM1	ddr_dqm1	0	O	H	1	0	VDDS_DDR / VDDS_DDR	NA	8	PU/PD	LVCMOS/SSTL/ HSTL
R1	P1	DDR_DQS0	ddr_dqs0	0	I/O	L	Z	0	VDDS_DDR / VDDS_DDR	Yes	8	PU/PD	LVCMOS/SSTL/ HSTL
L1	L1	DDR_DQS1	ddr_dqs1	0	I/O	L	Z	0	VDDS_DDR / VDDS_DDR	Yes	8	PU/PD	LVCMOS/SSTL/ HSTL
R2	P2	DDR_DQSn0	ddr_dqsn0	0	I/O	H	Z	0	VDDS_DDR / VDDS_DDR	Yes	8	PU/PD	LVCMOS/SSTL/ HSTL
L2	L2	DDR_DQSn1	ddr_dqsn1	0	I/O	H	Z	0	VDDS_DDR / VDDS_DDR	Yes	8	PU/PD	LVCMOS/SSTL/ HSTL
G1	G1	DDR_ODT	ddr_odt	0	O	L	0	0	VDDS_DDR / VDDS_DDR	NA	8	PU/PD	LVCMOS/SSTL/ HSTL
F2	G4	DDR_RASn	ddr_rasn	0	O	H	1	0	VDDS_DDR / VDDS_DDR	NA	8	PU/PD	LVCMOS/SSTL/ HSTL
G2	G2	DDR_RESETn	ddr_resetn	0	O	L	0	0	VDDS_DDR / VDDS_DDR	NA	8	PU/PD	LVCMOS/SSTL/ HSTL
H4	J4	DDR_VREF	ddr_vref	0	A (17)	NA	NA	NA	VDDS_DDR / VDDS_DDR	NA	NA	NA	Analog
J1	J3	DDR_VTP	ddr_vtp	0	I (18)	NA	NA	NA	VDDS_DDR / VDDS_DDR	NA	NA	NA	Analog
A4	B2	DDR_WEn	ddr_wen	0	O	H	1	0	VDDS_DDR / VDDS_DDR	NA	8	PU/PD	LVCMOS/SSTL/ HSTL
E18	C18	ECAP0_IN_PWM0_OUT	eCAP0_in_PWM0_out	0	I/O	Z	L	7	VDDSHV6 / VDDSHV6	Yes	4	PU/PD	LVCMOS
			uart3_txd	1	O								
			spi1_cs1	2	I/O								
			pr1_ecap0_ecap_capin_apwm_o	3	I/O								
			spi1_sclk	4	I/O								
			mmc0_sdwp	5	I								
			xdma_event_intr2	6	I								
			gpio0_7	7	I/O								
A15	C14	EMU0	EMU0	0	I/O	H	H	0	VDDSHV6 / VDDSHV6	Yes	6	PU/PD	LVCMOS
			gpio3_7	7	I/O								

Copyright © 2011–2013, Texas Instruments Incorporated

Table 2-7. Ball Characteristics (ZCE and ZCZ Packages) (continued)

ZCE BALL NUMBER [1]	ZCZ BALL NUMBER [1]	PIN NAME [2]	SIGNAL NAME [3]	MODE [4]	TYPE [5]	BALL RESET STATE [6]	BALL RESET REL. STATE [7]	RESET REL. MODE [8]	ZCE POWER / ZCZ POWER [9]	HYS [10]	BUFFER STRENGTH (mA) [11]	PULLUP /DOWN TYPE [12]	I/O CELL [13]
D14	B14	EMU1	EMU1	0	I/O	H	H	0	VDDSHV6 / VDDSHV6	Yes	6	PU/PD	LVCMOS
			gpio3_8	7	I/O								
C17	B18	EXTINTn	nNMI	0	I	Z	H	0	VDDSHV6 / VDDSHV6	Yes	NA	PU/PD	LVCMOS
B5	C5	EXT_WAKEUP	EXT_WAKEUP	0	I	L	Z	0	VDDS_RTC / VDDS_RTC	Yes	NA	NA	LVCMOS
NA	R13	GPMC_A0	gpmc_a0	0	O	L	L	7	NA / VDDSHV3	Yes	6	PU/PD	LVCMOS
			gmii2_txen	1	O								
			rgmii2_tctl	2	O								
			rmii2_txen	3	O								
			gpmc_a16	4	O								
			pr1_mii_mt1_clk	5	I								
			ehrpwm1_tripzone_input	6	I								
			gpio1_16	7	I/O								
NA	V14	GPMC_A1	gpmc_a1	0	O	L	L	7	NA / VDDSHV3	Yes	6	PU/PD	LVCMOS
			gmii2_rxdv	1	I								
			rgmii2_rctl	2	I								
			mmc2_dat0	3	I/O								
			gpmc_a17	4	O								
			pr1_mii1_txd3	5	O								
			ehrpwm0_synco	6	O								
			gpio1_17	7	I/O								
NA	U14	GPMC_A2	gpmc_a2	0	O	L	L	7	NA / VDDSHV3	Yes	6	PU/PD	LVCMOS
			gmii2_txd3	1	O								
			rgmii2_td3	2	O								
			mmc2_dat1	3	I/O								
			gpmc_a18	4	O								
			pr1_mii1_txd2	5	O								
			ehrpwm1A	6	O								
			gpio1_18	7	I/O								
NA	T14	GPMC_A3	gpmc_a3	0	O	L	L	7	NA / VDDSHV3	Yes	6	PU/PD	LVCMOS
			gmii2_txd2	1	O								
			rgmii2_td2	2	O								
			mmc2_dat2	3	I/O								
			gpmc_a19	4	O								
			pr1_mii1_txd1	5	O								
			ehrpwm1B	6	O								
			gpio1_19	7	I/O								

Copyright © 2011–2013, Texas Instruments Incorporated

Table 2-7. Ball Characteristics (ZCE and ZCZ Packages) (continued)

ZCE BALL NUMBER [1]	ZCZ BALL NUMBER [1]	PIN NAME [2]	SIGNAL NAME [3]	MODE [4]	TYPE [5]	BALL RESET STATE [6]	BALL RESET REL. STATE [7]	RESET REL. MODE [8]	ZCE POWER / ZCZ POWER [9]	HYS [10]	BUFFER STRENGTH (mA) [11]	PULLUP /DOWN TYPE [12]	I/O CELL [13]
NA	R14	GPMC_A4	gpmc_a4	0	O	L	L	7	NA / VDDSHV3	Yes	6	PU/PD	LVCMOS
			gmii2_txd1	1	O								
			rgmii2_td1	2	O								
			rmii2_txd1	3	O								
			gpmc_a20	4	O								
			pr1_mii1_txd0	5	O								
			eQEP1A_in	6	I								
			gpio1_20	7	I/O								
NA	V15	GPMC_A5	gpmc_a5	0	O	L	L	7	NA / VDDSHV3	Yes	6	PU/PD	LVCMOS
			gmii2_txd0	1	O								
			rgmii2_td0	2	O								
			rmii2_txd0	3	O								
			gpmc_a21	4	O								
			pr1_mii1_rxd3	5	I								
			eQEP1B_in	6	I								
			gpio1_21	7	I/O								
NA	U15	GPMC_A6	gpmc_a6	0	O	L	L	7	NA / VDDSHV3	Yes	6	PU/PD	LVCMOS
			gmii2_txclk	1	I								
			rgmii2_tclk	2	O								
			mmc2_dat4	3	I/O								
			gpmc_a22	4	O								
			pr1_mii1_rxd2	5	I								
			eQEP1_index	6	I/O								
			gpio1_22	7	I/O								
NA	T15	GPMC_A7	gpmc_a7	0	O	L	L	7	NA / VDDSHV3	Yes	6	PU/PD	LVCMOS
			gmii2_rxclk	1	I								
			rgmii2_rclk	2	I								
			mmc2_dat5	3	I/O								
			gpmc_a23	4	O								
			pr1_mii1_rxd1	5	I								
			eQEP1_strobe	6	I/O								
			gpio1_23	7	I/O								

Copyright © 2011–2013, Texas Instruments Incorporated

Table 2-7. Ball Characteristics (ZCE and ZCZ Packages) (continued)

ZCE BALL NUMBER [1]	ZCZ BALL NUMBER [1]	PIN NAME [2]	SIGNAL NAME [3]	MODE [4]	TYPE [5]	BALL RESET STATE [6]	BALL RESET REL. STATE [7]	RESET REL. MODE [8]	ZCE POWER / ZCZ POWER [9]	HYS [10]	BUFFER STRENGTH (mA) [11]	PULLUP /DOWN TYPE [12]	I/O CELL [13]
NA	V16	GPMC_A8	gpmc_a8	0	O	L	L	7	NA / VDDSHV3	Yes	6	PU/PD	LVCMOS
			gmii2_rxd3	1	I								
			rgmii2_rd3	2	I								
			mmc2_dat6	3	I/O								
			gpmc_a24	4	O								
			pr1_mii1_rxd0	5	I								
			mcasp0_aclkx	6	I/O								
			gpio1_24	7	I/O								
NA	U16	GPMC_A9 (10)	gpmc_a9	0	O	L	L	7	NA / VDDSHV3	Yes	6	PU/PD	LVCMOS
			gmii2_rxd2	1	I								
			rgmii2_rd2	2	I								
			mmc2_dat7 / rmii2_crs_dv	3	I/O								
			gpmc_a25	4	O								
			pr1_mii_mr1_clk	5	I								
			mcasp0_fsx	6	I/O								
			gpio1_25	7	I/O								
NA	T16	GPMC_A10	gpmc_a10	0	O	L	L	7	NA / VDDSHV3	Yes	6	PU/PD	LVCMOS
			gmii2_rxd1	1	I								
			rgmii2_rd1	2	I								
			rmii2_rxd1	3	I								
			gpmc_a26	4	O								
			pr1_mii1_rxdv	5	I								
			mcasp0_axr0	6	I/O								
			gpio1_26	7	I/O								
NA	V17	GPMC_A11	gpmc_a11	0	O	L	L	7	NA / VDDSHV3	Yes	6	PU/PD	LVCMOS
			gmii2_rxd0	1	I								
			rgmii2_rd0	2	I								
			rmii2_rxd0	3	I								
			gpmc_a27	4	O								
			pr1_mii1_rxer	5	I								
			mcasp0_axr1	6	I/O								
			gpio1_27	7	I/O								
W10	U7	GPMC_AD0	gpmc_ad0	0	I/O	L	L	7	VDDSHV1 / VDDSHV1	Yes	6	PU/PD	LVCMOS
			mmc1_dat0	1	I/O								
			gpio1_0	7	I/O								
V9	V7	GPMC_AD1	gpmc_ad1	0	I/O	L	L	7	VDDSHV1 / VDDSHV1	Yes	6	PU/PD	LVCMOS
			mmc1_dat1	1	I/O								
			gpio1_1	7	I/O								

Copyright © 2011–2013, Texas Instruments Incorporated

Table 2-7. Ball Characteristics (ZCE and ZCZ Packages) (continued)

ZCE BALL NUMBER [1]	ZCZ BALL NUMBER [1]	PIN NAME [2]	SIGNAL NAME [3]	MODE [4]	TYPE [5]	BALL RESET STATE [6]	BALL RESET REL. STATE [7]	RESET REL. MODE [8]	ZCE POWER / ZCZ POWER [9]	HYS [10]	BUFFER STRENGTH (mA) [11]	PULLUP /DOWN TYPE [12]	I/O CELL [13]
V12	R8	GPMC_AD2	gpmc_ad2	0	I/O	L	L	7	VDDSHV1 / VDDSHV1	Yes	6	PU/PD	LVCMOS
			mmc1_dat2	1	I/O								
			gpio1_2	7	I/O								
W13	T8	GPMC_AD3	gpmc_ad3	0	I/O	L	L	7	VDDSHV1 / VDDSHV1	Yes	6	PU/PD	LVCMOS
			mmc1_dat3	1	I/O								
			gpio1_3	7	I/O								
V13	U8	GPMC_AD4	gpmc_ad4	0	I/O	L	L	7	VDDSHV1 / VDDSHV1	Yes	6	PU/PD	LVCMOS
			mmc1_dat4	1	I/O								
			gpio1_4	7	I/O								
W14	V8	GPMC_AD5	gpmc_ad5	0	I/O	L	L	7	VDDSHV1 / VDDSHV1	Yes	6	PU/PD	LVCMOS
			mmc1_dat5	1	I/O								
			gpio1_5	7	I/O								
U14	R9	GPMC_AD6	gpmc_ad6	0	I/O	L	L	7	VDDSHV1 / VDDSHV1	Yes	6	PU/PD	LVCMOS
			mmc1_dat6	1	I/O								
			gpio1_6	7	I/O								
W15	T9	GPMC_AD7	gpmc_ad7	0	I/O	L	L	7	VDDSHV1 / VDDSHV1	Yes	6	PU/PD	LVCMOS
			mmc1_dat7	1	I/O								
			gpio1_7	7	I/O								
V15	U10	GPMC_AD8	gpmc_ad8	0	I/O	L	L	7	VDDSHV1 / VDDSHV2	Yes	6	PU/PD	LVCMOS
			lcd_data23	1	O								
			mmc1_dat0	2	I/O								
			mmc2_dat4	3	I/O								
			ehrpwm2A	4	O								
			pr1_mii_mt0_clk	5	I								
			gpio0_22	7	I/O								
W16	T10	GPMC_AD9	gpmc_ad9	0	I/O	L	L	7	VDDSHV1 / VDDSHV2	Yes	6	PU/PD	LVCMOS
			lcd_data22	1	O								
			mmc1_dat1	2	I/O								
			mmc2_dat5	3	I/O								
			ehrpwm2B	4	O								
			pr1_mii0_col	5	I								
			gpio0_23	7	I/O								

Copyright © 2011–2013, Texas Instruments Incorporated

Table 2-7. Ball Characteristics (ZCE and ZCZ Packages) (continued)

ZCE BALL NUMBER [1]	ZCZ BALL NUMBER [1]	PIN NAME [2]	SIGNAL NAME [3]	MODE [4]	TYPE [5]	BALL RESET STATE [6]	BALL RESET REL. STATE [7]	RESET REL. MODE [8]	ZCE POWER / ZCZ POWER [9]	HYS [10]	BUFFER STRENGTH (mA) [11]	PULLUP /DOWN TYPE [12]	I/O CELL [13]
T12	T11	GPMC_AD10	gpmc_ad10	0	I/O	L	L	7	VDDSHV1 / VDDSHV2	Yes	6	PU/PD	LVCMOS
			lcd_data21	1	O								
			mmc1_dat2	2	I/O								
			mmc2_dat6	3	I/O								
			ehrpwm2_tripzone_input	4	I								
			pr1_mii0_txen	5	O								
			gpio0_26	7	I/O								
U12	U12	GPMC_AD11	gpmc_ad11	0	I/O	L	L	7	VDDSHV1 / VDDSHV2	Yes	6	PU/PD	LVCMOS
			lcd_data20	1	O								
			mmc1_dat3	2	I/O								
			mmc2_dat7	3	I/O								
			ehrpwm0_synco	4	O								
			pr1_mii0_txd3	5	O								
			gpio0_27	7	I/O								
U13	T12	GPMC_AD12	gpmc_ad12	0	I/O	L	L	7	VDDSHV1 / VDDSHV2	Yes	6	PU/PD	LVCMOS
			lcd_data19	1	O								
			mmc1_dat4	2	I/O								
			mmc2_dat0	3	I/O								
			eQEP2A_in	4	I								
			pr1_mii0_txd2	5	O								
			pr1_pru0_pru_r30_14	6	O								
			gpio1_12	7	I/O								
T13	R12	GPMC_AD13	gpmc_ad13	0	I/O	L	L	7	VDDSHV1 / VDDSHV2	Yes	6	PU/PD	LVCMOS
			lcd_data18	1	O								
			mmc1_dat5	2	I/O								
			mmc2_dat1	3	I/O								
			eQEP2B_in	4	I								
			pr1_mii0_txd1	5	O								
			pr1_pru0_pru_r30_15	6	O								
			gpio1_13	7	I/O								
W17	V13	GPMC_AD14	gpmc_ad14	0	I/O	L	L	7	VDDSHV1 / VDDSHV2	Yes	6	PU/PD	LVCMOS
			lcd_data17	1	O								
			mmc1_dat6	2	I/O								
			mmc2_dat2	3	I/O								
			eQEP2_index	4	I/O								
			pr1_mii0_txd0	5	O								
			pr1_pru0_pru_r31_14	6	I								
			gpio1_14	7	I/O								

Copyright © 2011–2013, Texas Instruments Incorporated

Table 2-7. Ball Characteristics (ZCE and ZCZ Packages) (continued)

ZCE BALL NUMBER [1]	ZCZ BALL NUMBER [1]	PIN NAME [2]	SIGNAL NAME [3]	MODE [4]	TYPE [5]	BALL RESET STATE [6]	BALL RESET REL. STATE [7]	RESET REL. MODE [8]	ZCE POWER / ZCZ POWER [9]	HYS [10]	BUFFER STRENGTH (mA) [11]	PULLUP /DOWN TYPE [12]	I/O CELL [13]
V17	U13	GPMC_AD15	gpmc_ad15	0	I/O	L	L	7	VDDSHV1 / VDDSHV2	Yes	6	PU/PD	LVCMOS
			lcd_data16	1	O								
			mmc1_dat7	2	I/O								
			mmc2_dat3	3	I/O								
			eQEP2_strobe	4	I/O								
			pr1_ecap0_ecap_capin_apwm_o	5	I/O								
			pr1_pru0_pru_r31_15	6	I								
			gpio1_15	7	I/O								
V10	R7	GPMC_ADVn_ALE	gpmc_advn_ale	0	O	H	H	7	VDDSHV1 / VDDSHV1	Yes	6	PU/PD	LVCMOS
			timer4	2	I/O								
			gpio2_2	7	I/O								
V8	T6	GPMC_BEn0_CLE	gpmc_be0n_cle	0	O	H	H	7	VDDSHV1 / VDDSHV1	Yes	6	PU/PD	LVCMOS
			timer5	2	I/O								
			gpio2_5	7	I/O								
V18	U18	GPMC_BEn1	gpmc_be1n	0	O	H	H	7	VDDSHV1 / VDDSHV3	Yes	6	PU/PD	LVCMOS
			gmii2_col	1	I								
			gpmc_csn6	2	O								
			mmc2_dat3	3	I/O								
			gpmc_dir	4	O								
			pr1_mii1_rxlink	5	I								
			mcasp0_aclkr	6	I/O								
			gpio1_28	7	I/O								
V16	V12	GPMC_CLK	gpmc_clk	0	I/O	L	L	7	VDDSHV1 / VDDSHV2	Yes	6	PU/PD	LVCMOS
			lcd_memory_clk	1	O								
			gpmc_wait1	2	I								
			mmc2_clk	3	I/O								
			pr1_mii1_crs	4	I								
			pr1_mdio_mdclk	5	O								
			mcasp0_fsr	6	I/O								
			gpio2_1	7	I/O								
W8	V6	GPMC_CSn0	gpmc_csn0	0	O	H	H	7	VDDSHV1 / VDDSHV1	Yes	6	PU/PD	LVCMOS
			gpio1_29	7	I/O								

Copyright © 2011–2013, Texas Instruments Incorporated

Table 2-7. Ball Characteristics (ZCE and ZCZ Packages) (continued)

ZCE BALL NUMBER [1]	ZCZ BALL NUMBER [1]	PIN NAME [2]	SIGNAL NAME [3]	MODE [4]	TYPE [5]	BALL RESET STATE [6]	BALL RESET REL. STATE [7]	RESET REL. MODE [8]	ZCE POWER / ZCZ POWER [9]	HYS [10]	BUFFER STRENGTH (mA) [11]	PULLUP /DOWN TYPE [12]	I/O CELL [13]
V14	U9	GPMC_CSn1	gpmc_csn1	0	O	H	H	7	VDDSHV1 / VDDSHV1	Yes	6	PU/PD	LVCMOS
			gpmc_clk	1	I/O								
			mmc1_clk	2	I/O								
			pr1_edio_data_in6	3	I								
			pr1_edio_data_out6	4	O								
			pr1_pru1_pru_r30_12	5	O								
			pr1_pru1_pru_r31_12	6	I								
			gpio1_30	7	I/O								
U15	V9	GPMC_CSn2	gpmc_csn2	0	O	H	H	7	VDDSHV1 / VDDSHV1	Yes	6	PU/PD	LVCMOS
			gpmc_be1n	1	O								
			mmc1_cmd	2	I/O								
			pr1_edio_data_in7	3	I								
			pr1_edio_data_out7	4	O								
			pr1_pru1_pru_r30_13	5	O								
			pr1_pru1_pru_r31_13	6	I								
			gpio1_31	7	I/O								
U17	T13	GPMC_CSn3 (6)	gpmc_csn3	0	O	H	H	7	VDDSHV1 / VDDSHV2	Yes	6	PU/PD	LVCMOS
			gpmc_a3	1	O								
			rmii2_crs_dv	2	I								
			mmc2_cmd	3	I/O								
			pr1_mii0_crs	4	I								
			pr1_mdio_data	5	I/O								
			EMU4	6	I/O								
			gpio2_0	7	I/O								
W9	T7	GPMC_OEn_REn	gpmc_oen_ren	0	O	H	H	7	VDDSHV1 / VDDSHV1	Yes	6	PU/PD	LVCMOS
			timer7	2	I/O								
			gpio2_3	7	I/O								
R15	T17	GPMC_WAIT0	gpmc_wait0	0	I	H	H	7	VDDSHV1 / VDDSHV3	Yes	6	PU/PD	LVCMOS
			gmii2_crs	1	I								
			gpmc_csn4	2	O								
			rmii2_crs_dv	3	I								
			mmc1_sdcd	4	I								
			pr1_mii1_col	5	I								
			uart4_rxd	6	I								
			gpio0_30	7	I/O								
U8	U6	GPMC_WEn	gpmc_wen	0	O	H	H	7	VDDSHV1 / VDDSHV1	Yes	6	PU/PD	LVCMOS
			timer6	2	I/O								
			gpio2_4	7	I/O								

Copyright © 2011–2013, Texas Instruments Incorporated

Table 2-7. Ball Characteristics (ZCE and ZCZ Packages) (continued)

ZCE BALL NUMBER [1]	ZCZ BALL NUMBER [1]	PIN NAME [2]	SIGNAL NAME [3]	MODE [4]	TYPE [5]	BALL RESET STATE [6]	BALL RESET REL. STATE [7]	RESET REL. MODE [8]	ZCE POWER / ZCZ POWER [9]	HYS [10]	BUFFER STRENGTH (mA) [11]	PULLUP /DOWN TYPE [12]	I/O CELL [13]
W18	U17	GPMC_WPn	gpmc_wpn	0	O	H	H	7	VDDSHV1 / VDDSHV3	Yes	6	PU/PD	LVCMOS
			gmii2_rxerr	1	I								
			gpmc_csn5	2	O								
			rmii2_rxerr	3	I								
			mmc2_sdcd	4	I								
			pr1_mii1_txen	5	O								
			uart4_txd	6	O								
			gpio0_31	7	I/O								
C18	C17	I2C0_SDA	I2C0_SDA	0	I/OD	Z	H	7	VDDSHV6 / VDDSHV6	Yes	4	PU/PD	LVCMOS
			timer4	1	I/O								
			uart2_ctsn	2	I								
			eCAP2_in_PWM2_out	3	I/O								
			gpio3_5	7	I/O								
B19	C16	I2C0_SCL	I2C0_SCL	0	I/OD	Z	H	7	VDDSHV6 / VDDSHV6	Yes	4	PU/PD	LVCMOS
			timer7	1	I/O								
			uart2_rtsn	2	O								
			eCAP1_in_PWM1_out	3	I/O								
			gpio3_6	7	I/O								
W7	R6	LCD_AC_BIAS_EN	lcd_ac_bias_en	0	O	Z	L	7	VDDSHV6 / VDDSHV6	Yes	6	PU/PD	LVCMOS
			gpmc_a11	1	O								
			pr1_mii1_crs	2	I								
			pr1_edio_data_in5	3	I								
			pr1_edio_data_out5	4	O								
			pr1_pru1_pru_r30_11	5	O								
			pr1_pru1_pru_r31_11	6	I								
			gpio2_25	7	I/O								
U1	R1	LCD_DATA0 (5)	lcd_data0	0	I/O	Z	Z	7	VDDSHV6 / VDDSHV6	Yes	6	PU/PD	LVCMOS
			gpmc_a0	1	O								
			pr1_mii_mt0_clk	2	I								
			ehrpwm2A	3	O								
			pr1_pru1_pru_r30_0	5	O								
			pr1_pru1_pru_r31_0	6	I								
			gpio2_6	7	I/O								

Copyright © 2011–2013, Texas Instruments Incorporated

Table 2-7. Ball Characteristics (ZCE and ZCZ Packages) (continued)

ZCE BALL NUMBER [1]	ZCZ BALL NUMBER [1]	PIN NAME [2]	SIGNAL NAME [3]	MODE [4]	TYPE [5]	BALL RESET STATE [6]	BALL RESET REL. STATE [7]	RESET REL. MODE [8]	ZCE POWER / ZCZ POWER [9]	HYS [10]	BUFFER STRENGTH (mA) [11]	PULLUP /DOWN TYPE [12]	I/O CELL [13]
U2	R2	LCD_DATA1 (5)	lcd_data1	0	I/O	Z	Z	7	VDDSHV6 / VDDSHV6	Yes	6	PU/PD	LVCMOS
			gpmc_a1	1	O								
			pr1_mii0_txen	2	O								
			ehrpwm2B	3	O								
			pr1_pru1_pru_r30_1	5	O								
			pr1_pru1_pru_r31_1	6	I								
			gpio2_7	7	I/O								
V1	R3	LCD_DATA2 (5)	lcd_data2	0	I/O	Z	Z	7	VDDSHV6 / VDDSHV6	Yes	6	PU/PD	LVCMOS
			gpmc_a2	1	O								
			pr1_mii0_txd3	2	O								
			ehrpwm2_tripzone_input	3	I								
			pr1_pru1_pru_r30_2	5	O								
			pr1_pru1_pru_r31_2	6	I								
			gpio2_8	7	I/O								
V2	R4	LCD_DATA3 (5)	lcd_data3	0	I/O	Z	Z	7	VDDSHV6 / VDDSHV6	Yes	6	PU/PD	LVCMOS
			gpmc_a3	1	O								
			pr1_mii0_txd2	2	O								
			ehrpwm0_synco	3	O								
			pr1_pru1_pru_r30_3	5	O								
			pr1_pru1_pru_r31_3	6	I								
			gpio2_9	7	I/O								
W2	T1	LCD_DATA4 (5)	lcd_data4	0	I/O	Z	Z	7	VDDSHV6 / VDDSHV6	Yes	6	PU/PD	LVCMOS
			gpmc_a4	1	O								
			pr1_mii0_txd1	2	O								
			eQEP2A_in	3	I								
			pr1_pru1_pru_r30_4	5	O								
			pr1_pru1_pru_r31_4	6	I								
			gpio2_10	7	I/O								
W3	T2	LCD_DATA5 (5)	lcd_data5	0	I/O	Z	Z	7	VDDSHV6 / VDDSHV6	Yes	6	PU/PD	LVCMOS
			gpmc_a5	1	O								
			pr1_mii0_txd0	2	O								
			eQEP2B_in	3	I								
			pr1_pru1_pru_r30_5	5	O								
			pr1_pru1_pru_r31_5	6	I								
			gpio2_11	7	I/O								

Copyright © 2011–2013, Texas Instruments Incorporated

Table 2-7. Ball Characteristics (ZCE and ZCZ Packages) (continued)

ZCE BALL NUMBER [1]	ZCZ BALL NUMBER [1]	PIN NAME [2]	SIGNAL NAME [3]	MODE [4]	TYPE [5]	BALL RESET STATE [6]	BALL RESET REL. STATE [7]	RESET REL. MODE [8]	ZCE POWER / ZCZ POWER [9]	HYS [10]	BUFFER STRENGTH (mA) [11]	PULLUP /DOWN TYPE [12]	I/O CELL [13]
V3	T3	LCD_DATA6 (5)	lcd_data6	0	I/O	Z	Z	7	VDDSHV6 / VDDSHV6	Yes	6	PU/PD	LVCMOS
			gpmc_a6	1	O								
			pr1_edio_data_in6	2	I								
			eQEP2_index	3	I/O								
			pr1_edio_data_out6	4	O								
			pr1_pru1_pru_r30_6	5	O								
			pr1_pru1_pru_r31_6	6	I								
			gpio2_12	7	I/O								
U3	T4	LCD_DATA7 (5)	lcd_data7	0	I/O	Z	Z	7	VDDSHV6 / VDDSHV6	Yes	6	PU/PD	LVCMOS
			gpmc_a7	1	O								
			pr1_edio_data_in7	2	I								
			eQEP2_strobe	3	I/O								
			pr1_edio_data_out7	4	O								
			pr1_pru1_pru_r30_7	5	O								
			pr1_pru1_pru_r31_7	6	I								
			gpio2_13	7	I/O								
V4	U1	LCD_DATA8 (5)	lcd_data8	0	I/O	Z	Z	7	VDDSHV6 / VDDSHV6	Yes	6	PU/PD	LVCMOS
			gpmc_a12	1	O								
			ehrpwm1_tripzone_input	2	I								
			mcasp0_aclkx	3	I/O								
			uart5_txd	4	O								
			pr1_mii0_rxd3	5	I								
			uart2_ctsn	6	I								
			gpio2_14	7	I/O								
W4	U2	LCD_DATA9 (5)	lcd_data9	0	I/O	Z	Z	7	VDDSHV6 / VDDSHV6	Yes	6	PU/PD	LVCMOS
			gpmc_a13	1	O								
			ehrpwm0_synco	2	O								
			mcasp0_fsx	3	I/O								
			uart5_rxd	4	I								
			pr1_mii0_rxd2	5	I								
			uart2_rtsn	6	O								
			gpio2_15	7	I/O								

Copyright © 2011–2013, Texas Instruments Incorporated

Table 2-7. Ball Characteristics (ZCE and ZCZ Packages) (continued)

ZCE BALL NUMBER [1]	ZCZ BALL NUMBER [1]	PIN NAME [2]	SIGNAL NAME [3]	MODE [4]	TYPE [5]	BALL RESET STATE [6]	BALL RESET REL. STATE [7]	RESET REL. MODE [8]	ZCE POWER / ZCZ POWER [9]	HYS [10]	BUFFER STRENGTH (mA) [11]	PULLUP /DOWN TYPE [12]	I/O CELL [13]
U5	U3	LCD_DATA10 (5)	lcd_data10	0	I/O	Z	Z	7	VDDSHV6 / VDDSHV6	Yes	6	PU/PD	LVCMOS
			gpmc_a14	1	O								
			ehrpwm1A	2	O								
			mcasp0_axr0	3	I/O								
			pr1_mii0_rxd1	5	I								
			uart3_ctsn	6	I								
			gpio2_16	7	I/O								
V5	U4	LCD_DATA11 (5)	lcd_data11	0	I/O	Z	Z	7	VDDSHV6 / VDDSHV6	Yes	6	PU/PD	LVCMOS
			gpmc_a15	1	O								
			ehrpwm1B	2	O								
			mcasp0_ahclkr	3	I/O								
			mcasp0_axr2	4	I/O								
			pr1_mii0_rxd0	5	I								
			uart3_rtsn	6	O								
			gpio2_17	7	I/O								
V6	V2	LCD_DATA12 (5)	lcd_data12	0	I/O	Z	Z	7	VDDSHV6 / VDDSHV6	Yes	6	PU/PD	LVCMOS
			gpmc_a16	1	O								
			eQEP1A_in	2	I								
			mcasp0_aclkr	3	I/O								
			mcasp0_axr2	4	I/O								
			pr1_mii0_rxlink	5	I								
			uart4_ctsn	6	I								
			gpio0_8	7	I/O								
U6	V3	LCD_DATA13 (5)	lcd_data13	0	I/O	Z	Z	7	VDDSHV6 / VDDSHV6	Yes	6	PU/PD	LVCMOS
			gpmc_a17	1	O								
			eQEP1B_in	2	I								
			mcasp0_fsr	3	I/O								
			mcasp0_axr3	4	I/O								
			pr1_mii0_rxer	5	I								
			uart4_rtsn	6	O								
			gpio0_9	7	I/O								

Copyright © 2011–2013, Texas Instruments Incorporated

Table 2-7. Ball Characteristics (ZCE and ZCZ Packages) (continued)

ZCE BALL NUMBER [1]	ZCZ BALL NUMBER [1]	PIN NAME [2]	SIGNAL NAME [3]	MODE [4]	TYPE [5]	BALL RESET STATE [6]	BALL RESET REL. STATE [7]	RESET REL. MODE [8]	ZCE POWER / ZCZ POWER [9]	HYS [10]	BUFFER STRENGTH (mA) [11]	PULLUP /DOWN TYPE [12]	I/O CELL [13]
W6	V4	LCD_DATA14 (5)	lcd_data14	0	I/O	Z	Z	7	VDDSHV6 / VDDSHV6	Yes	6	PU/PD	LVCMOS
			gpmc_a18	1	O								
			eQEP1_index	2	I/O								
			mcasp0_axr1	3	I/O								
			uart5_rxd	4	I								
			pr1_mii_mr0_clk	5	I								
			uart5_ctsn	6	I								
			gpio0_10	7	I/O								
V7	T5	LCD_DATA15 (5)	lcd_data15	0	I/O	Z	Z	7	VDDSHV6 / VDDSHV6	Yes	6	PU/PD	LVCMOS
			gpmc_a19	1	O								
			eQEP1_strobe	2	I/O								
			mcasp0_ahclkx	3	I/O								
			mcasp0_axr3	4	I/O								
			pr1_mii0_rxdv	5	I								
			uart5_rtsn	6	O								
			gpio0_11	7	I/O								
T7	R5	LCD_HSYNC (7)	lcd_hsync	0	O	Z	L	7	VDDSHV6 / VDDSHV6	Yes	6	PU/PD	LVCMOS
			gpmc_a9	1	O								
			gpmc_a2	2	O								
			pr1_edio_data_in3	3	I								
			pr1_edio_data_out3	4	O								
			pr1_pru1_pru_r30_9	5	O								
			pr1_pru1_pru_r31_9	6	I								
			gpio2_23	7	I/O								
W5	V5	LCD_PCLK	lcd_pclk	0	O	Z	L	7	VDDSHV6 / VDDSHV6	Yes	6	PU/PD	LVCMOS
			gpmc_a10	1	O								
			pr1_mii0_crs	2	I								
			pr1_edio_data_in4	3	I								
			pr1_edio_data_out4	4	O								
			pr1_pru1_pru_r30_10	5	O								
			pr1_pru1_pru_r31_10	6	I								
			gpio2_24	7	I/O								

Copyright © 2011–2013, Texas Instruments Incorporated

Table 2-7. Ball Characteristics (ZCE and ZCZ Packages) (continued)

ZCE BALL NUMBER [1]	ZCZ BALL NUMBER [1]	PIN NAME [2]	SIGNAL NAME [3]	MODE [4]	TYPE [5]	BALL RESET STATE [6]	BALL RESET REL. STATE [7]	RESET REL. MODE [8]	ZCE POWER / ZCZ POWER [9]	HYS [10]	BUFFER STRENGTH (mA) [11]	PULLUP /DOWN TYPE [12]	I/O CELL [13]
U7	U5	LCD_VSYNC (7)	lcd_vsync	0	O	Z	L	7	VDDSHV6 / VDDSHV6	Yes	6	PU/PD	LVCMOS
			gpmc_a8	1	O								
			gpmc_a1	2	O								
			pr1_edio_data_in2	3	I								
			pr1_edio_data_out2	4	O								
			pr1_pru1_pru_r30_8	5	O								
			pr1_pru1_pru_r31_8	6	I								
			gpio2_22	7	I/O								
NA	B13	MCASP0_FSX	mcasp0_fsx	0	I/O	L	L	7	NA / VDDSHV6	Yes	6	PU/PD	LVCMOS
			ehrpwm0B	1	O								
			spi1_d0	3	I/O								
			mmc1_sdcd	4	I								
			pr1_pru0_pru_r30_1	5	O								
			pr1_pru0_pru_r31_1	6	I								
			gpio3_15	7	I/O								
NA	B12	MCASP0_ACLKR	mcasp0_aclkr	0	I/O	L	L	7	NA / VDDSHV6	Yes	6	PU/PD	LVCMOS
			eQEP0A_in	1	I								
			mcasp0_axr2	2	I/O								
			mcasp1_aclkx	3	I/O								
			mmc0_sdwp	4	I								
			pr1_pru0_pru_r30_4	5	O								
			pr1_pru0_pru_r31_4	6	I								
			gpio3_18	7	I/O								
NA	C12	MCASP0_AHCLKR	mcasp0_ahclkr	0	I/O	L	L	7	NA / VDDSHV6	Yes	6	PU/PD	LVCMOS
			ehrpwm0_synci	1	I								
			mcasp0_axr2	2	I/O								
			spi1_cs0	3	I/O								
			eCAP2_in_PWM2_out	4	I/O								
			pr1_pru0_pru_r30_3	5	O								
			pr1_pru0_pru_r31_3	6	I								
			gpio3_17	7	I/O								

Copyright © 2011–2013, Texas Instruments Incorporated

Table 2-7. Ball Characteristics (ZCE and ZCZ Packages) (continued)

ZCE BALL NUMBER [1]	ZCZ BALL NUMBER [1]	PIN NAME [2]	SIGNAL NAME [3]	MODE [4]	TYPE [5]	BALL RESET STATE [6]	BALL RESET REL. STATE [7]	RESET REL. MODE [8]	ZCE POWER / ZCZ POWER [9]	HYS [10]	BUFFER STRENGTH (mA) [11]	PULLUP /DOWN TYPE [12]	I/O CELL [13]
NA	A14	MCASP0_AHCLKX	mcasp0_ahclkx	0	I/O	L	L	7	NA / VDDSHV6	Yes	6	PU/PD	LVCMOS
			eQEP0_strobe	1	I/O								
			mcasp0_axr3	2	I/O								
			mcasp1_axr1	3	I/O								
			EMU4	4	I/O								
			pr1_pru0_pru_r30_7	5	O								
			pr1_pru0_pru_r31_7	6	I								
			gpio3_21	7	I/O								
NA	A13	MCASP0_ACLKX	mcasp0_aclkx	0	I/O	L	L	7	NA / VDDSHV6	Yes	6	PU/PD	LVCMOS
			ehrpwm0A	1	O								
			spi1_sclk	3	I/O								
			mmc0_sdcd	4	I								
			pr1_pru0_pru_r30_0	5	O								
			pr1_pru0_pru_r31_0	6	I								
			gpio3_14	7	I/O								
NA	C13	MCASP0_FSR	mcasp0_fsr	0	I/O	L	L	7	NA / VDDSHV6	Yes	6	PU/PD	LVCMOS
			eQEP0B_in	1	I								
			mcasp0_axr3	2	I/O								
			mcasp1_fsx	3	I/O								
			EMU2	4	I/O								
			pr1_pru0_pru_r30_5	5	O								
			pr1_pru0_pru_r31_5	6	I								
			gpio3_19	7	I/O								
NA	D12	MCASP0_AXR0	mcasp0_axr0	0	I/O	L	L	7	NA / VDDSHV6	Yes	6	PU/PD	LVCMOS
			ehrpwm0_tripzone_input	1	I								
			spi1_d1	3	I/O								
			mmc2_sdcd	4	I								
			pr1_pru0_pru_r30_2	5	O								
			pr1_pru0_pru_r31_2	6	I								
			gpio3_16	7	I/O								
NA	D13	MCASP0_AXR1	mcasp0_axr1	0	I/O	L	L	7	NA / VDDSHV6	Yes	6	PU/PD	LVCMOS
			eQEP0_index	1	I/O								
			mcasp1_axr0	3	I/O								
			EMU3	4	I/O								
			pr1_pru0_pru_r30_6	5	O								
			pr1_pru0_pru_r31_6	6	I								
			gpio3_20	7	I/O								

Copyright © 2011–2013, Texas Instruments Incorporated

Table 2-7. Ball Characteristics (ZCE and ZCZ Packages) (continued)

ZCE BALL NUMBER [1]	ZCZ BALL NUMBER [1]	PIN NAME [2]	SIGNAL NAME [3]	MODE [4]	TYPE [5]	BALL RESET STATE [6]	BALL RESET REL. STATE [7]	RESET REL. MODE [8]	ZCE POWER / ZCZ POWER [9]	HYS [10]	BUFFER STRENGTH (mA) [11]	PULLUP /DOWN TYPE [12]	I/O CELL [13]
R19	M18	MDC	mdio_clk	0	O	H	H	7	VDDSHV5 / VDDSHV5	Yes	6	PU/PD	LVCMOS
			timer5	1	I/O								
			uart5_txd	2	O								
			uart3_rtsn	3	O								
			mmc0_sdwp	4	I								
			mmc1_clk	5	I/O								
			mmc2_clk	6	I/O								
			gpio0_1	7	I/O								
P17	M17	MDIO	mdio_data	0	I/O	H	H	7	VDDSHV5 / VDDSHV5	Yes	6	PU/PD	LVCMOS
			timer6	1	I/O								
			uart5_rxd	2	I								
			uart3_ctsn	3	I								
			mmc0_sdcd	4	I								
			mmc1_cmd	5	I/O								
			mmc2_cmd	6	I/O								
			gpio0_0	7	I/O								
L19	J17	MII1_RX_DV	gmii1_rxdv	0	I	L	L	7	VDDSHV5 / VDDSHV5	Yes	6	PU/PD	LVCMOS
			lcd_memory_clk	1	O								
			rgmii1_rctl	2	I								
			uart5_txd	3	O								
			mcasp1_aclkx	4	I/O								
			mmc2_dat0	5	I/O								
			mcasp0_aclkr	6	I/O								
			gpio3_4	7	I/O								
K17	J16	MII1_TX_EN	gmii1_txen	0	O	L	L	7	VDDSHV5 / VDDSHV5	Yes	6	PU/PD	LVCMOS
			rmii1_txen	1	O								
			rgmii1_tctl	2	O								
			timer4	3	I/O								
			mcasp1_axr0	4	I/O								
			eQEP0_index	5	I/O								
			mmc2_cmd	6	I/O								
			gpio3_3	7	I/O								

Copyright © 2011–2013, Texas Instruments Incorporated

Table 2-7. Ball Characteristics (ZCE and ZCZ Packages) (continued)

ZCE BALL NUMBER [1]	ZCZ BALL NUMBER [1]	PIN NAME [2]	SIGNAL NAME [3]	MODE [4]	TYPE [5]	BALL RESET STATE [6]	BALL RESET REL. STATE [7]	RESET REL. MODE [8]	ZCE POWER / ZCZ POWER [9]	HYS [10]	BUFFER STRENGTH (mA) [11]	PULLUP /DOWN TYPE [12]	I/O CELL [13]
K19	J15	MII1_RX_ER	gmii1_rxerr	0	I	L	L	7	VDDSHV5 / VDDSHV5	Yes	6	PU/PD	LVCMOS
			rmii1_rxerr	1	I								
			spi1_d1	2	I/O								
			I2C1_SCL	3	I/OD								
			mcasp1_fsx	4	I/O								
			uart5_rtsn	5	O								
			uart2_txd	6	O								
			gpio3_2	7	I/O								
M19	L18	MII1_RX_CLK	gmii1_rxclk	0	I	L	L	7	VDDSHV5 / VDDSHV5	Yes	6	PU/PD	LVCMOS
			uart2_txd	1	O								
			rgmii1_rclk	2	I								
			mmc0_dat6	3	I/O								
			mmc1_dat1	4	I/O								
			uart1_dsrn	5	I								
			mcasp0_fsx	6	I/O								
			gpio3_10	7	I/O								
N19	K18	MII1_TX_CLK	gmii1_txclk	0	I	L	L	7	VDDSHV5 / VDDSHV5	Yes	6	PU/PD	LVCMOS
			uart2_rxd	1	I								
			rgmii1_tclk	2	O								
			mmc0_dat7	3	I/O								
			mmc1_dat0	4	I/O								
			uart1_dcdn	5	I								
			mcasp0_aclkx	6	I/O								
			gpio3_9	7	I/O								
J19	H16	MII1_COL	gmii1_col	0	I	L	L	7	VDDSHV5 / VDDSHV5	Yes	6	PU/PD	LVCMOS
			rmii2_refclk	1	I/O								
			spi1_sclk	2	I/O								
			uart5_rxd	3	I								
			mcasp1_axr2	4	I/O								
			mmc2_dat3	5	I/O								
			mcasp0_axr2	6	I/O								
			gpio3_0	7	I/O								

Copyright © 2011–2013, Texas Instruments Incorporated

Table 2-7. Ball Characteristics (ZCE and ZCZ Packages) (continued)

ZCE BALL NUMBER [1]	ZCZ BALL NUMBER [1]	PIN NAME [2]	SIGNAL NAME [3]	MODE [4]	TYPE [5]	BALL RESET STATE [6]	BALL RESET REL. STATE [7]	RESET REL. MODE [8]	ZCE POWER / ZCZ POWER [9]	HYS [10]	BUFFER STRENGTH (mA) [11]	PULLUP /DOWN TYPE [12]	I/O CELL [13]
J18	H17	MII1_CRS	gmii1_crs	0	I	L	L	7	VDDSHV5 / VDDSHV5	Yes	6	PU/PD	LVCMOS
			rmii1_crs_dv	1	I								
			spi1_d0	2	I/O								
			I2C1_SDA	3	I/OD								
			mcasp1_aclkx	4	I/O								
			uart5_ctsn	5	I								
			uart2_rxd	6	I								
			gpio3_1	7	I/O								
P18	M16	MII1_RXD0	gmii1_rxd0	0	I	L	L	7	VDDSHV5 / VDDSHV5	Yes	6	PU/PD	LVCMOS
			rmii1_rxd0	1	I								
			rgmii1_rd0	2	I								
			mcasp1_ahclkx	3	I/O								
			mcasp1_ahclkr	4	I/O								
			mcasp1_aclkr	5	I/O								
			mcasp0_axr3	6	I/O								
			gpio2_21	7	I/O								
P19	L15	MII1_RXD1	gmii1_rxd1	0	I	L	L	7	VDDSHV5 / VDDSHV5	Yes	6	PU/PD	LVCMOS
			rmii1_rxd1	1	I								
			rgmii1_rd1	2	I								
			mcasp1_axr3	3	I/O								
			mcasp1_fsr	4	I/O								
			eQEP0_strobe	5	I/O								
			mmc2_clk	6	I/O								
			gpio2_20	7	I/O								
N16	L16	MII1_RXD2	gmii1_rxd2	0	I	L	L	7	VDDSHV5 / VDDSHV5	Yes	6	PU/PD	LVCMOS
			uart3_txd	1	O								
			rgmii1_rd2	2	I								
			mmc0_dat4	3	I/O								
			mmc1_dat3	4	I/O								
			uart1_rin	5	I								
			mcasp0_axr1	6	I/O								
			gpio2_19	7	I/O								

Copyright © 2011–2013, Texas Instruments Incorporated

Table 2-7. Ball Characteristics (ZCE and ZCZ Packages) (continued)

ZCE BALL NUMBER [1]	ZCZ BALL NUMBER [1]	PIN NAME [2]	SIGNAL NAME [3]	MODE [4]	TYPE [5]	BALL RESET STATE [6]	BALL RESET REL. STATE [7]	RESET REL. MODE [8]	ZCE POWER / ZCZ POWER [9]	HYS [10]	BUFFER STRENGTH (mA) [11]	PULLUP /DOWN TYPE [12]	I/O CELL [13]
N17	L17	MII1_RXD3	gmii1_rxd3	0	I	L	L	7	VDDSHV5 / VDDSHV5	Yes	6	PU/PD	LVCMOS
			uart3_rxd	1	I								
			rgmii1_rd3	2	I								
			mmc0_dat5	3	I/O								
			mmc1_dat2	4	I/O								
			uart1_dtrn	5	O								
			mcasp0_axr0	6	I/O								
			gpio2_18	7	I/O								
L18	K17	MII1_TXD0	gmii1_txd0	0	O	L	L	7	VDDSHV5 / VDDSHV5	Yes	6	PU/PD	LVCMOS
			rmii1_txd0	1	O								
			rgmii1_td0	2	O								
			mcasp1_axr2	3	I/O								
			mcasp1_aclkr	4	I/O								
			eQEP0B_in	5	I								
			mmc1_clk	6	I/O								
			gpio0_28	7	I/O								
M18	K16	MII1_TXD1	gmii1_txd1	0	O	L	L	7	VDDSHV5 / VDDSHV5	Yes	6	PU/PD	LVCMOS
			rmii1_txd1	1	O								
			rgmii1_td1	2	O								
			mcasp1_fsr	3	I/O								
			mcasp1_axr1	4	I/O								
			eQEP0A_in	5	I								
			mmc1_cmd	6	I/O								
			gpio0_21	7	I/O								
N18	K15	MII1_TXD2	gmii1_txd2	0	O	L	L	7	VDDSHV5 / VDDSHV5	Yes	6	PU/PD	LVCMOS
			dcan0_rx	1	I								
			rgmii1_td2	2	O								
			uart4_txd	3	O								
			mcasp1_axr0	4	I/O								
			mmc2_dat2	5	I/O								
			mcasp0_ahclkx	6	I/O								
			gpio0_17	7	I/O								

Copyright © 2011–2013, Texas Instruments Incorporated

Table 2-7. Ball Characteristics (ZCE and ZCZ Packages) (continued)

ZCE BALL NUMBER [1]	ZCZ BALL NUMBER [1]	PIN NAME [2]	SIGNAL NAME [3]	MODE [4]	TYPE [5]	BALL RESET STATE [6]	BALL RESET REL. STATE [7]	RESET REL. MODE [8]	ZCE POWER / ZCZ POWER [9]	HYS [10]	BUFFER STRENGTH (mA) [11]	PULLUP /DOWN TYPE [12]	I/O CELL [13]
M17	J18	MII1_TXD3	gmii1_txd3	0	O	L	L	7	VDDSHV5 / VDDSHV5	Yes	6	PU/PD	LVCMOS
			dcan0_tx	1	O								
			rgmii1_td3	2	O								
			uart4_rxd	3	I								
			mcasp1_fsx	4	I/O								
			mmc2_dat1	5	I/O								
			mcasp0_fsr	6	I/O								
			gpio0_16	7	I/O								
G17	G18	MMC0_CMD	mmc0_cmd	0	I/O	H	H	7	VDDSHV4 / VDDSHV4	Yes	6	PU/PD	LVCMOS
			gpmc_a25	1	O								
			uart3_rtsn	2	O								
			uart2_txd	3	O								
			dcan1_rx	4	I								
			pr1_pru0_pru_r30_13	5	O								
			pr1_pru0_pru_r31_13	6	I								
			gpio2_31	7	I/O								
G19	G17	MMC0_CLK	mmc0_clk	0	I/O	H	H	7	VDDSHV4 / VDDSHV4	Yes	6	PU/PD	LVCMOS
			gpmc_a24	1	O								
			uart3_ctsn	2	I								
			uart2_rxd	3	I								
			dcan1_tx	4	O								
			pr1_pru0_pru_r30_12	5	O								
			pr1_pru0_pru_r31_12	6	I								
			gpio2_30	7	I/O								
G18	G16	MMC0_DAT0	mmc0_dat0	0	I/O	H	H	7	VDDSHV4 / VDDSHV4	Yes	6	PU/PD	LVCMOS
			gpmc_a23	1	O								
			uart5_rtsn	2	O								
			uart3_txd	3	O								
			uart1_rin	4	I								
			pr1_pru0_pru_r30_11	5	O								
			pr1_pru0_pru_r31_11	6	I								
			gpio2_29	7	I/O								

Copyright © 2011–2013, Texas Instruments Incorporated

Table 2-7. Ball Characteristics (ZCE and ZCZ Packages) (continued)

ZCE BALL NUMBER [1]	ZCZ BALL NUMBER [1]	PIN NAME [2]	SIGNAL NAME [3]	MODE [4]	TYPE [5]	BALL RESET STATE [6]	BALL RESET REL. STATE [7]	RESET REL. MODE [8]	ZCE POWER / ZCZ POWER [9]	HYS [10]	BUFFER STRENGTH (mA) [11]	PULLUP /DOWN TYPE [12]	I/O CELL [13]
H17	G15	MMC0_DAT1	mmc0_dat1	0	I/O	H	H	7	VDDSHV4 / VDDSHV4	Yes	6	PU/PD	LVCMOS
			gpmc_a22	1	O								
			uart5_ctsn	2	I								
			uart3_rxd	3	I								
			uart1_dtrn	4	O								
			pr1_pru0_pru_r30_10	5	O								
			pr1_pru0_pru_r31_10	6	I								
			gpio2_28	7	I/O								
H18	F18	MMC0_DAT2	mmc0_dat2	0	I/O	H	H	7	VDDSHV4 / VDDSHV4	Yes	6	PU/PD	LVCMOS
			gpmc_a21	1	O								
			uart4_rtsn	2	O								
			timer6	3	I/O								
			uart1_dsrn	4	I								
			pr1_pru0_pru_r30_9	5	O								
			pr1_pru0_pru_r31_9	6	I								
			gpio2_27	7	I/O								
H19	F17	MMC0_DAT3	mmc0_dat3	0	I/O	H	H	7	VDDSHV4 / VDDSHV4	Yes	6	PU/PD	LVCMOS
			gpmc_a20	1	O								
			uart4_ctsn	2	I								
			timer5	3	I/O								
			uart1_dcdn	4	I								
			pr1_pru0_pru_r30_8	5	O								
			pr1_pru0_pru_r31_8	6	I								
			gpio2_26	7	I/O								
C7	C6	PMIC_POWER_EN	PMIC_POWER_EN	0	O	H	1	0	VDDS_RTC / VDDS_RTC	NA	6	NA	LVCMOS
E15	B15	PWRONRSTn	porz	0	I	Z	Z	0	VDDSHV6 / VDDSHV6 (11)	Yes	NA	NA	LVCMOS
B6	A3	RESERVED (3)	testout	0	O	NA	NA	NA	VDDSHV6 / VDDSHV6	NA	NA	NA	Analog
K18	H18	RMII1_REF_CLK	rmii1_refclk	0	I/O	L	L	7	VDDSHV5 / VDDSHV5	Yes	6	PU/PD	LVCMOS
			xdma_event_intr2	1	I								
			spi1_cs0	2	I/O								
			uart5_txd	3	O								
			mcasp1_axr3	4	I/O								
			mmc0_pow	5	O								
			mcasp1_ahclkx	6	I/O								
			gpio0_29	7	I/O								
A7	B4	RTC_KALDO_ENn	ENZ_KALDO_1P8V	0	I	Z	Z	0	VDDS_RTC / VDDS_RTC	NA	NA	NA	Analog

Copyright © 2011–2013, Texas Instruments Incorporated

Table 2-7. Ball Characteristics (ZCE and ZCZ Packages) (continued)

ZCE BALL NUMBER [1]	ZCZ BALL NUMBER [1]	PIN NAME [2]	SIGNAL NAME [3]	MODE [4]	TYPE [5]	BALL RESET STATE [6]	BALL RESET REL. STATE [7]	RESET REL. MODE [8]	ZCE POWER / ZCZ POWER [9]	HYS [10]	BUFFER STRENGTH (mA) [11]	PULLUP /DOWN TYPE [12]	I/O CELL [13]
B7	B5	RTC_PWRONRSTn	RTC_PORz	0	I	Z	Z	0	VDDS_RTC / VDDS_RTC	Yes	NA	NA	LVCMOS
A6	A6	RTC_XTALIN	OSC1_IN	0	I	H	H	0	VDDS_RTC / VDDS_RTC	Yes	NA	PU (1)	LVCMOS
A5	A4	RTC_XTALOUT	OSC1_OUT	0	O	Z (22)	Z (22)	0	VDDS_RTC / VDDS_RTC	NA	NA (14)	NA	LVCMOS
A18	A17	SPI0_SCLK	spi0_sclk	0	I/O	Z	H	7	VDDSHV6 / VDDSHV6	Yes	6	PU/PD	LVCMOS
			uart2_rxd	1	I								
			I2C2_SDA	2	I/OD								
			ehrpwm0A	3	O								
			pr1_uart0_cts_n	4	I								
			pr1_edio_sof	5	O								
			EMU2	6	I/O								
			gpio0_2	7	I/O								
A17	A16	SPI0_CS0	spi0_cs0	0	I/O	Z	H	7	VDDSHV6 / VDDSHV6	Yes	6	PU/PD	LVCMOS
			mmc2_sdwp	1	I								
			I2C1_SCL	2	I/OD								
			ehrpwm0_synci	3	I								
			pr1_uart0_txd	4	O								
			pr1_edio_data_in1	5	I								
			pr1_edio_data_out1	6	O								
			gpio0_5	7	I/O								
B16	C15	SPI0_CS1	spi0_cs1	0	I/O	Z	H	7	VDDSHV6 / VDDSHV6	Yes	6	PU/PD	LVCMOS
			uart3_rxd	1	I								
			eCAP1_in_PWM1_out	2	I/O								
			mmc0_pow	3	O								
			xdma_event_intr2	4	I								
			mmc0_sdcd	5	I								
			EMU4	6	I/O								
			gpio0_6	7	I/O								
B18	B17	SPI0_D0	spi0_d0	0	I/O	Z	H	7	VDDSHV6 / VDDSHV6	Yes	6	PU/PD	LVCMOS
			uart2_txd	1	O								
			I2C2_SCL	2	I/OD								
			ehrpwm0B	3	O								
			pr1_uart0_rts_n	4	O								
			pr1_edio_latch_in	5	I								
			EMU3	6	I/O								
			gpio0_3	7	I/O								

Copyright © 2011–2013, Texas Instruments Incorporated

Table 2-7. Ball Characteristics (ZCE and ZCZ Packages) (continued)

ZCE BALL NUMBER [1]	ZCZ BALL NUMBER [1]	PIN NAME [2]	SIGNAL NAME [3]	MODE [4]	TYPE [5]	BALL RESET STATE [6]	BALL RESET REL. STATE [7]	RESET REL. MODE [8]	ZCE POWER / ZCZ POWER [9]	HYS [10]	BUFFER STRENGTH (mA) [11]	PULLUP /DOWN TYPE [12]	I/O CELL [13]
B17	B16	SPI0_D1	spi0_d1	0	I/O	Z	H	7	VDDSHV6 / VDDSHV6	Yes	6	PU/PD	LVCMOS
			mmc1_sdwp	1	I								
			I2C1_SDA	2	I/OD								
			ehrpwm0_tripzone_input	3	I								
			pr1_uart0_rxd	4	I								
			pr1_edio_data_in0	5	I								
			pr1_edio_data_out0	6	O								
			gpio0_4	7	I/O								
B14	A12	TCK	TCK	0	I	H	H	0	VDDSHV6 / VDDSHV6	Yes	NA	PU/PD	LVCMOS
B13	B11	TDI	TDI	0	I	H	H	0	VDDSHV6 / VDDSHV6	Yes	NA	PU/PD	LVCMOS
A14	A11	TDO	TDO	0	O	H	H	0	VDDSHV6 / VDDSHV6	NA	4	PU/PD	LVCMOS
C14	C11	TMS	TMS	0	I	H	H	0	VDDSHV6 / VDDSHV6	Yes	NA	PU/PD	LVCMOS
A13	B10	TRSTn	nTRST	0	I	L	L	0	VDDSHV6 / VDDSHV6	Yes	NA	PU/PD	LVCMOS
F17	E16	UART0_TXD	uart0_txd	0	O	Z	H	7	VDDSHV6 / VDDSHV6	Yes	4	PU/PD	LVCMOS
			spi1_cs1	1	I/O								
			dcan0_rx	2	I								
			I2C2_SCL	3	I/OD								
			eCAP1_in_PWM1_out	4	I/O								
			pr1_pru1_pru_r30_15	5	O								
			pr1_pru1_pru_r31_15	6	I								
			gpio1_11	7	I/O								
F19	E18	UART0_CTSn	uart0_ctsn	0	I	Z	H	7	VDDSHV6 / VDDSHV6	Yes	4	PU/PD	LVCMOS
			uart4_rxd	1	I								
			dcan1_tx	2	O								
			I2C1_SDA	3	I/OD								
			spi1_d0	4	I/O								
			timer7	5	I/O								
			pr1_edc_sync0_out	6	O								
			gpio1_8	7	I/O								

Copyright © 2011–2013, Texas Instruments Incorporated

Table 2-7. Ball Characteristics (ZCE and ZCZ Packages) (continued)

ZCE BALL NUMBER [1]	ZCZ BALL NUMBER [1]	PIN NAME [2]	SIGNAL NAME [3]	MODE [4]	TYPE [5]	BALL RESET STATE [6]	BALL RESET REL. STATE [7]	RESET REL. MODE [8]	ZCE POWER / ZCZ POWER [9]	HYS [10]	BUFFER STRENGTH (mA) [11]	PULLUP /DOWN TYPE [12]	I/O CELL [13]
E19	E15	UART0_RXD	uart0_rxd	0	I	Z	H	7	VDDSHV6 / VDDSHV6	Yes	4	PU/PD	LVCMOS
			spi1_cs0	1	I/O								
			dcan0_tx	2	O								
			I2C2_SDA	3	I/OD								
			eCAP2_in_PWM2_out	4	I/O								
			pr1_pru1_pru_r30_14	5	O								
			pr1_pru1_pru_r31_14	6	I								
			gpio1_10	7	I/O								
F18	E17	UART0_RTSn	uart0_rtsn	0	O	Z	H	7	VDDSHV6 / VDDSHV6	Yes	4	PU/PD	LVCMOS
			uart4_txd	1	O								
			dcan1_rx	2	I								
			I2C1_SCL	3	I/OD								
			spi1_d1	4	I/O								
			spi1_cs0	5	I/O								
			pr1_edc_sync1_out	6	O								
			gpio1_9	7	I/O								
C19	D15	UART1_TXD	uart1_txd	0	O	Z	H	7	VDDSHV6 / VDDSHV6	Yes	4	PU/PD	LVCMOS
			mmc2_sdwp	1	I								
			dcan1_rx	2	I								
			I2C1_SCL	3	I/OD								
			pr1_uart0_txd	5	O								
			pr1_pru0_pru_r31_16	6	I								
			gpio0_15	7	I/O								
D18	D16	UART1_RXD	uart1_rxd	0	I	Z	H	7	VDDSHV6 / VDDSHV6	Yes	4	PU/PD	LVCMOS
			mmc1_sdwp	1	I								
			dcan1_tx	2	O								
			I2C1_SDA	3	I/OD								
			pr1_uart0_rxd	5	I								
			pr1_pru1_pru_r31_16	6	I								
			gpio0_14	7	I/O								
D19	D17	UART1_RTSn	uart1_rtsn	0	O	Z	H	7	VDDSHV6 / VDDSHV6	Yes	4	PU/PD	LVCMOS
			timer5	1	I/O								
			dcan0_rx	2	I								
			I2C2_SCL	3	I/OD								
			spi1_cs1	4	I/O								
			pr1_uart0_rts_n	5	O								
			pr1_edc_latch1_in	6	I								
			gpio0_13	7	I/O								

Copyright © 2011–2013, Texas Instruments Incorporated

Table 2-7. Ball Characteristics (ZCE and ZCZ Packages) (continued)

ZCE BALL NUMBER [1]	ZCZ BALL NUMBER [1]	PIN NAME [2]	SIGNAL NAME [3]	MODE [4]	TYPE [5]	BALL RESET STATE [6]	BALL RESET REL. STATE [7]	RESET REL. MODE [8]	ZCE POWER / ZCZ POWER [9]	HYS [10]	BUFFER STRENGTH (mA) [11]	PULLUP /DOWN TYPE [12]	I/O CELL [13]
E17	D18	UART1_CTSn	uart1_ctsn	0	I	Z	H	7	VDDSHV6 / VDDSHV6	Yes	4	PU/PD	LVCMOS
			timer6	1	I/O								
			dcan0_tx	2	O								
			I2C2_SDA	3	I/OD								
			spi1_cs0	4	I/O								
			pr1_uart0_cts_n	5	I								
			pr1_edc_latch0_in	6	I								
			gpio0_12	7	I/O								
T18	M15	USB0_CE	USB0_CE	0	A	Z	Z	0	VDDA*_USB0 / VDDA*_USB0 (24)	NA	NA	NA	Analog
T19	P15	USB0_VBUS	USB0_VBUS	0	A	Z	Z	0	VDDA*_USB0 / VDDA*_USB0 (24)	NA	NA	NA	Analog
U18	N18	USB0_DM	USB0_DM	0	A	Z	Z	0 (12)	VDDA*_USB0 / VDDA*_USB0 (24)	Yes (15)	8 (15)	NA	Analog
G16	F16	USB0_DRVVBUS	USB0_DRVVBUS	0	O	L	0(PD)	0	VDDSHV6 / VDDSHV6	Yes	4	PU/PD	LVCMOS
			gpio0_18	7	I/O								
V19	P16	USB0_ID	USB0_ID	0	A	Z	Z	0	VDDA*_USB0 / VDDA*_USB0 (24)	NA	NA	NA	Analog
U19	N17	USB0_DP	USB0_DP	0	A	Z	Z	0 (12)	VDDA*_USB0 / VDDA*_USB0 (24)	Yes (15)	8 (15)	NA	Analog
NA	P18	USB1_CE	USB1_CE	0	A	Z	Z	0	NA / VDDA*_USB1 (25)	NA	NA	NA	Analog
NA	P17	USB1_ID	USB1_ID	0	A	Z	Z	0	NA / VDDA*_USB1 (25)	NA	NA	NA	Analog
NA	T18	USB1_VBUS	USB1_VBUS	0	A	Z	Z	0	NA / VDDA*_USB1 (25)	NA	NA	NA	Analog
NA	R17	USB1_DP	USB1_DP	0	A	Z	Z	0 (13)	NA / VDDA*_USB1 (25)	Yes (16)	8 (16)	NA	Analog
NA	F15	USB1_DRVVBUS	USB1_DRVVBUS	0	O	L	0(PD)	0	NA / VDDSHV6	Yes	4	PU/PD	LVCMOS
			gpio3_13	7	I/O								
NA	R18	USB1_DM	USB1_DM	0	A	Z	Z	0 (13)	NA / VDDA*_USB1 (25)	Yes (16)	8 (16)	NA	Analog
R17	N16	VDDA1P8V_USB0	VDDA1P8V_USB0	NA	PWR								
NA	R16	VDDA1P8V_USB1	VDDA1P8V_USB1	NA	PWR								
R18	N15	VDDA3P3V_USB0	VDDA3P3V_USB0	NA	PWR								
NA	R15	VDDA3P3V_USB1	VDDA3P3V_USB1	NA	PWR								

Copyright © 2011–2013, Texas Instruments Incorporated

Table 2-7. Ball Characteristics (ZCE and ZCZ Packages) (continued)

ZCE BALL NUMBER [1]	ZCZ BALL NUMBER [1]	PIN NAME [2]	SIGNAL NAME [3]	MODE [4]	TYPE [5]	BALL RESET STATE [6]	BALL RESET REL. STATE [7]	RESET REL. MODE [8]	ZCE POWER / ZCZ POWER [9]	HYS [10]	BUFFER STRENGTH (mA) [11]	PULLUP /DOWN TYPE [12]	I/O CELL [13]
D7	D8	VDDA_ADC	VDDA_ADC	NA	PWR								
D12, F16, M16, T6, T14	E6, E14, F9, K13, N6, P9, P14	VDDS	VDDS	NA	PWR								
R8, R9, R11, R12, R13	P7, P8	VDDSHV1	VDDSHV1	NA	PWR								
NA	P10, P11	VDDSHV2	VDDSHV2	NA	PWR								
NA	P12, P13	VDDSHV3	VDDSHV3	NA	PWR								
G15, H14, H15	H14, J14	VDDSHV4	VDDSHV4	NA	PWR								
M14, M15, N15	K14, L14	VDDSHV5	VDDSHV5	NA	PWR								
E11, E12, E13, F14, P6, R7	E10, E11, E12, E13, F14, G14, N5, P5, P6	VDDSHV6	VDDSHV6	NA	PWR								
G5, H5, H6, K4, K5, M5, M6, N5	E5, F5, G5, H5, J5, K5, L5	VDDS_DDR	VDDS_DDR	NA	PWR								
U10	R11	VDDS_OSC	VDDS_OSC	NA	PWR								
T8	R10	VDDS_PLL_CORE_LCD	VDDS_PLL_CORE_LCD	NA	PWR								
C5	E7	VDDS_PLL_DDR	VDDS_PLL_DDR	NA	PWR								
H16	H15	VDDS_PLL_MPU	VDDS_PLL_MPU	NA	PWR								
C6	D7	VDDS_RTC	VDDS_RTC	NA	PWR								
C10	E9	VDDS_SRAM_CORE_BG	VDDS_SRAM_CORE_BG	NA	PWR								
C12	D10	VDDS_SRAM_MPU_BB	VDDS_SRAM_MPU_BB	NA	PWR								
F9, F11, G9, G11, H7, H8, H12, H13, J7, J8, J12, J13, K15, K16, L7, L8, L12, L13, M7, M8, M12, M13, N9, N11, P9, P11	F6, F7, G6, G7, G10, H11, J12, K6, K8, K12, L6, L7, L8, L9, M11, M13, N8, N9, N12, N13	VDD_CORE	VDD_CORE	NA	PWR								
NA	F10, F11, F12, F13, G13, H13, J13	VDD_MPU	VDD_MPU (26)	NA	PWR								
NA	A2	VDD_MPU_MON	VDD_MPU_MON (27)	NA	A								
R5	M5	VPP	VPP	NA	PWR								
B9	A9	VREFN	VREFN	0	AP	Z	Z	0	VDDA_ADC / VDDA_ADC	NA	NA	NA	Analog
A9	B9	VREFP	VREFP	0	AP	Z	Z	0	VDDA_ADC / VDDA_ADC	NA	NA	NA	Analog

Copyright © 2011–2013, Texas Instruments Incorporated

Table 2-7. Ball Characteristics (ZCE and ZCZ Packages) (continued)

ZCE BALL NUMBER [1]	ZCZ BALL NUMBER [1]	PIN NAME [2]	SIGNAL NAME [3]	MODE [4]	TYPE [5]	BALL RESET STATE [6]	BALL RESET REL. STATE [7]	RESET REL. MODE [8]	ZCE POWER / ZCZ POWER [9]	HYS [10]	BUFFER STRENGTH (mA) [11]	PULLUP /DOWN TYPE [12]	I/O CELL [13]
A1, A19, D10, E7, E8, E9, E10, F6, F7, F8, F12, F13, G8, G12, H9, H10, H11, J5, J6, J9, J11, J14, J15, K8, K9, K11, K12, L5, L6, L9, L11, L14, L15, M9, M10, M11, N8, N12, P7, P8, P12, P13, P14, R10, T10, W1, W19	A1, A18, F8, G8, G9, G11, G12, H6, H7, H8, H9, H10, H12, J6, J7, J8, J9, J10, J11, K7, K9, K10, K11, L10, L11, L12, L13, M6, M7, M8, M9, M10, M12, N7, N10, N11, V1, V18	VSS	VSS	NA	GND								
D8	E8	VSSA_ADC	VSSA_ADC	NA	GND								
P16	M14, N14	VSSA_USB	VSSA_USB	NA	GND								
V11	V11	VSS_OSC	VSS_OSC (29)	NA	A								
NA	A5	VSS_RTC	VSS_RTC (28)	NA	A								
A16	A10	WARMRSTn	nRESETIN_OUT	0	I/OD (8)	0	0(PU)	0	VDDSHV6 / VDDSHV6	Yes	4	PU/PD	LVCMOS
C15	A15	XDMA_EVENT_INTR0	xdma_event_intr0	0	I	Z	(4)	(9)	VDDSHV6 / VDDSHV6	Yes	4	PU/PD	LVCMOS
			timer4	2	I/O								
			clkout1	3	O								
			spi1_cs1	4	I/O								
			pr1_pru1_pru_r31_16	5	I								
			EMU2	6	I/O								
			gpio0_19	7	I/O								
B15	D14	XDMA_EVENT_INTR1	xdma_event_intr1	0	I	Z	L	7	VDDSHV6 / VDDSHV6	Yes	4	PU/PD	LVCMOS
			tclkin	2	I								
			clkout2	3	O								
			timer7	4	I/O								
			pr1_pru0_pru_r31_16	5	I								
			EMU3	6	I/O								
			gpio0_20	7	I/O								
W11	V10	XTALIN	OSC0_IN	0	I	Z	Z	0	VDDS_OSC / VDDS_OSC	Yes	NA	PD (2)	LVCMOS
W12	U11	XTALOUT	OSC0_OUT	0	O	(23)	(23)	0	VDDS_OSC / VDDS_OSC	NA	NA (14)	NA	LVCMOS

Copyright © 2011–2013, Texas Instruments Incorporated

(1) An internal 10 kohm pull up is turned on when the oscillator is diasabled. The oscillator is disabled by default after power is applied.

(2) An internal 15 kohm pull down is turned on when the oscillator is disabled. The oscillator is enabled by default after power is applied.

(3) Do not connect anything to this terminal.

(4) If sysboot[5] is low on the rising edge of PWRONRSTn, this terminal has an internal pull-down turned on after reset is released. If sysboot[5] is high on the rising edge or PWRONRSTn, this terminal will initially be driven low after reset is released then it begins to toggle at the same frequency of the XTALIN terminal.

(5) LCD_DATA[15:0] terminals are respectively SYSBOOT[15:0] inputs, latched on the rising edge of PWRONRSTn.

(6) Mode1 and Mode2 signal assignments for this terminal are only available with silicon revision 2.0 or newer devices.

(7) Mode2 signal assignment for this terminal is only available with silicon revision 2.0 or newer devices.

(8) Refer to the External Warm Reset section of the AM335x Technical Reference Manual for more information related to the operation of this terminal.

(9) Reset Release Mode = 7 if sysboot[5] is low. Mode = 3 if sysboot[5] is high.

(10) Silicon revision 1.0 devices only provide the MMC2_DAT7 signal when Mode3 is selected. Silicon revision 2.0 and newer devices implement another level of pin multiplexing which provides the original MMC2_DAT7 signal or RMII2_CRS_DV signal when Mode3 is selected. This new level of of pin multiplexing is selected with bit zero of the SMA2 register. For more details refer to Section 1.2 of the AM335x Technical Reference Manual.

(11) The input voltage thresholds for this input are not a function of VDDSHV6. Please refer to the DC Electrical Characteristics section for details related to electrical parameters associated with this input terminal.

(12) The internal USB PHY can be configured to multiplex the UART2_TX or UART2_RX signals to this terminal. For more details refer to USB GPIO Details section of the AM335x Technical Reference Manual.

(13) The internal USB PHY can be configured to multiplex the UART3_TX or UART3_RX signals to this terminal. For more details refer to USB GPIO Details section of the AM335x Technical Reference Manual.

(14) This output should only be used to source the recommended crystal circuit.

(15) This parameter only applies when this USB PHY terminal is operating in UART2 mode.

(16) This parameter only applies when this USB PHY terminal is operating in UART3 mode.

(17) This terminal is a analog input used to set the switching threshold of the DDR input buffers to (VDDS_DDR / 2).

(18) This terminal is a analog passive signal that connects to an external 49.9 ohm 1%, 20mW reference resistor which is used to calibrate the DDR input/output buffers.

(19) This terminal is analog input that may also be configured as an open-drain output.

(20) This terminal is analog input that may also be configured as an open-source or open-drain output.

(21) This terminal is analog input that may also be configured as an open-source output.

(22) This terminal is high-Z when the oscillator is diasabled. This terminal is driven high if RTC_XTALIN is less than VIL, driven low if RTC_XTALIN is greater than VIH, and driven to a unknown value if RTC_XTALIN is between VIL and VIH when the oscillator is enabled. The oscillator is disabled by default after power is applied.

(23) This terminal is high-Z when the oscillator is diasabled. This terminal is driven high if XTALIN is less than VIL, driven low if XTALIN is greater than VIH, and driven to a unknown value if XTALIN is between VIL and VIH when the oscillator is enabled. The oscillator is enabled by default after power is applied.

(24) This terminal requires two power supplies, VDDA3p3v_USB0 and VDDA1p8v_USB0. The "*" character in the power supply name is a wild card that represents "3p3v" and "1p8v".

(25) This terminal requires two power supplies, VDDA3p3v_USB1 and VDDA1p8v_USB1. The "*" character in the power supply name is a wild card that represents "3p3v" and "1p8v".

(26) This power rail is connected to VDD_CORE in the ZCE package.

(27) This terminal provides a Kelvin connection to VDD_MPU. It can be connected to the power supply feedback input to provide remote sensing which compensates for voltage drop in the PCB power distribution network and package. When the Kelvin connection is not used it should be connected to the same power source as VDD_MPU.

(28) This terminal provides a Kelvin ground reference for the external crystal components. If a crystal circuit is connected to the RTC_XTALIN/RTC_XTALOUT terminals, the crystal circuit component grounds should only be connected to this terminal and should not be connected to the PCB ground plane. If an external LVCMOS clock source is connected to the XTALIN terminal, this terminal should be connected to VSS.

(29) This terminal provides a Kelvin ground reference for the external crystal components. If a crystal circuit is connected to the XTALIN/XTALOUT terminals, the crystal circuit component

Copyright © 2011–2013, Texas Instruments Incorporated

grounds should only be connected to this terminal and should not be connected to the PCB ground plane. If an external LVCMOS clock source is connected to the XTALIN terminal, this terminal should be connected to VSS.

Copyright © 2011–2013, Texas Instruments Incorporated

2.3 Signal Description

The AM335x device contains many peripheral interfaces. In order to reduce package size and lower overall system cost while maintaining maximum functionality, many of the AM335x terminals can multiplex up to eight signal functions. Although there are many combinations of pin multiplexing that are possible, only a certain number of sets, called IO Sets, are valid due to timing limitations. These valid IO Sets were carefully chosen to provide many possible application scenarios for the user.

Texas Instruments has developed a Windows-based application called Pin Mux Utility that helps a system designer select the appropriate pin-multiplexing configuration for their AM335x-based product design. The Pin Mux Utility provides a way to select valid IO Sets of specific peripheral interfaces to ensure the pin-multiplexing configuration selected for a design only uses valid IO Sets supported by the AM335x device.

(1) **SIGNAL NAME:** The signal name
(2) **DESCRIPTION:** Description of the signal
(3) **TYPE:** Ball type for this specific function:
- I = Input
- O = Output
- I/O = Input/Output
- D = Open drain
- DS = Differential
- A = Analog

(4) **BALL:** Package ball location

Table 2-8. ADC Signals Description

SIGNAL NAME [1]	DESCRIPTION [2]	TYPE [3]	ZCE BALL [4]	ZCZ BALL [4]
AIN0	Analog Input/Output	A	B8	B6
AIN1	Analog Input/Output	A	A11	C7
AIN2	Analog Input/Output	A	A8	B7
AIN3	Analog Input/Output	A	B11	A7
AIN4	Analog Input/Output	A	C8	C8
AIN5	Analog Input	A	B12	B8
AIN6	Analog Input	A	A10	A8
AIN7	Analog Input	A	A12	C9
VREFN	Analog Negative Reference Input	AP	B9	A9
VREFP	Analog Positive Reference Input	AP	A9	B9

Table 2-9. Debug Subsystem Signals Description

SIGNAL NAME [1]	DESCRIPTION [2]	TYPE [3]	ZCE BALL [4]	ZCZ BALL [4]
EMU0	MISC EMULATION PIN	I/O	A15	C14
EMU1	MISC EMULATION PIN	I/O	D14	B14
EMU2	MISC EMULATION PIN	I/O	A18, C15	A15, A17, C13
EMU3	MISC EMULATION PIN	I/O	B15, B18	B17, D13, D14
EMU4	MISC EMULATION PIN	I/O	B16, U17	A14, C15, T13
nTRST	JTAG TEST RESET (ACTIVE LOW)	I	A13	B10
TCK	JTAG TEST CLOCK	I	B14	A12
TDI	JTAG TEST DATA INPUT	I	B13	B11
TDO	JTAG TEST DATA OUTPUT	O	A14	A11
TMS	JTAG TEST MODE SELECT	I	C14	C11

Table 2-10. LCD Controller Signals Description

SIGNAL NAME [1]	DESCRIPTION [2]	TYPE [3]	ZCE BALL [4]	ZCZ BALL [4]
lcd_ac_bias_en	LCD AC bias enable chip select	O	W7	R6
lcd_data0	LCD data bus	I/O	U1	R1
lcd_data1	LCD data bus	I/O	U2	R2
lcd_data10	LCD data bus	I/O	U5	U3
lcd_data11	LCD data bus	I/O	V5	U4
lcd_data12	LCD data bus	I/O	V6	V2
lcd_data13	LCD data bus	I/O	U6	V3
lcd_data14	LCD data bus	I/O	W6	V4
lcd_data15	LCD data bus	I/O	V7	T5
lcd_data16	LCD data bus	O	V17	U13

Copyright © 2011–2013, Texas Instruments Incorporated

Table 2-10. LCD Controller Signals Description (continued)

SIGNAL NAME [1]	DESCRIPTION [2]	TYPE [3]	ZCE BALL [4]	ZCZ BALL [4]
lcd_data17	LCD data bus	O	W17	V13
lcd_data18	LCD data bus	O	T13	R12
lcd_data19	LCD data bus	O	U13	T12
lcd_data2	LCD data bus	I/O	V1	R3
lcd_data20	LCD data bus	O	U12	U12
lcd_data21	LCD data bus	O	T12	T11
lcd_data22	LCD data bus	O	W16	T10
lcd_data23	LCD data bus	O	V15	U10
lcd_data3	LCD data bus	I/O	V2	R4
lcd_data4	LCD data bus	I/O	W2	T1
lcd_data5	LCD data bus	I/O	W3	T2
lcd_data6	LCD data bus	I/O	V3	T3
lcd_data7	LCD data bus	I/O	U3	T4
lcd_data8	LCD data bus	I/O	V4	U1
lcd_data9	LCD data bus	I/O	W4	U2
lcd_hsync	LCD Horizontal Sync	O	T7	R5
lcd_memory_clk	LCD MCLK	O	L19, V16	J17, V12
lcd_pclk	LCD pixel clock	O	W5	V5
lcd_vsync	LCD Vertical Sync	O	U7	U5

Copyright © 2011–2013, Texas Instruments Incorporated

2.3.1 External Memory Interfaces

Table 2-11. External Memory Interfaces/DDR Signals Description

SIGNAL NAME [1]	DESCRIPTION [2]	TYPE [3]	ZCE BALL [4]	ZCZ BALL [4]
ddr_a0	DDR SDRAM ROW/COLUMN ADDRESS OUTPUT	O	F3	F3
ddr_a1	DDR SDRAM ROW/COLUMN ADDRESS OUTPUT	O	J2	H1
ddr_a10	DDR SDRAM ROW/COLUMN ADDRESS OUTPUT	O	E2	F4
ddr_a11	DDR SDRAM ROW/COLUMN ADDRESS OUTPUT	O	G4	F2
ddr_a12	DDR SDRAM ROW/COLUMN ADDRESS OUTPUT	O	F4	E3
ddr_a13	DDR SDRAM ROW/COLUMN ADDRESS OUTPUT	O	H1	H3
ddr_a14	DDR SDRAM ROW/COLUMN ADDRESS OUTPUT	O	H3	H4
ddr_a15	DDR SDRAM ROW/COLUMN ADDRESS OUTPUT	O	E3	D3
ddr_a2	DDR SDRAM ROW/COLUMN ADDRESS OUTPUT	O	D1	E4
ddr_a3	DDR SDRAM ROW/COLUMN ADDRESS OUTPUT	O	B3	C3
ddr_a4	DDR SDRAM ROW/COLUMN ADDRESS OUTPUT	O	E5	C2
ddr_a5	DDR SDRAM ROW/COLUMN ADDRESS OUTPUT	O	A2	B1
ddr_a6	DDR SDRAM ROW/COLUMN ADDRESS OUTPUT	O	B1	D5
ddr_a7	DDR SDRAM ROW/COLUMN ADDRESS OUTPUT	O	D2	E2
ddr_a8	DDR SDRAM ROW/COLUMN ADDRESS OUTPUT	O	C3	D4
ddr_a9	DDR SDRAM ROW/COLUMN ADDRESS OUTPUT	O	B2	C1
ddr_ba0	DDR SDRAM BANK ADDRESS OUTPUT	O	A3	C4
ddr_ba1	DDR SDRAM BANK ADDRESS OUTPUT	O	E1	E1
ddr_ba2	DDR SDRAM BANK ADDRESS OUTPUT	O	B4	B3
ddr_casn	DDR SDRAM COLUMN ADDRESS STROBE OUTPUT (ACTIVE LOW)	O	F1	F1
ddr_ck	DDR SDRAM CLOCK OUTPUT (Differential+)	O	C2	D2
ddr_cke	DDR SDRAM CLOCK ENABLE OUTPUT	O	G3	G3
ddr_csn0	DDR SDRAM CHIP SELECT OUTPUT	O	H2	H2
ddr_d0	DDR SDRAM DATA INPUT/OUTPUT	I/O	N4	M3
ddr_d1	DDR SDRAM DATA INPUT/OUTPUT	I/O	P4	M4
ddr_d10	DDR SDRAM DATA INPUT/OUTPUT	I/O	M3	K2
ddr_d11	DDR SDRAM DATA INPUT/OUTPUT	I/O	M4	K3
ddr_d12	DDR SDRAM DATA INPUT/OUTPUT	I/O	M2	K4
ddr_d13	DDR SDRAM DATA INPUT/OUTPUT	I/O	M1	L3
ddr_d14	DDR SDRAM DATA INPUT/OUTPUT	I/O	N2	L4
ddr_d15	DDR SDRAM DATA INPUT/OUTPUT	I/O	N1	M1
ddr_d2	DDR SDRAM DATA INPUT/OUTPUT	I/O	P2	N1
ddr_d3	DDR SDRAM DATA INPUT/OUTPUT	I/O	P1	N2

Copyright © 2011–2013, Texas Instruments Incorporated

Table 2-11. External Memory Interfaces/DDR Signals Description (continued)

SIGNAL NAME [1]	DESCRIPTION [2]	TYPE [3]	ZCE BALL [4]	ZCZ BALL [4]
ddr_d4	DDR SDRAM DATA INPUT/OUTPUT	I/O	P3	N3
ddr_d5	DDR SDRAM DATA INPUT/OUTPUT	I/O	T1	N4
ddr_d6	DDR SDRAM DATA INPUT/OUTPUT	I/O	T2	P3
ddr_d7	DDR SDRAM DATA INPUT/OUTPUT	I/O	R3	P4
ddr_d8	DDR SDRAM DATA INPUT/OUTPUT	I/O	K2	J1
ddr_d9	DDR SDRAM DATA INPUT/OUTPUT	I/O	K1	K1
ddr_dqm0	DDR WRITE ENABLE / DATA MASK FOR DATA[7:0]	O	N3	M2
ddr_dqm1	DDR WRITE ENABLE / DATA MASK FOR DATA[15:8]	O	K3	J2
ddr_dqs0	DDR DATA STROBE FOR DATA[7:0] (Differential+)	I/O	R1	P1
ddr_dqs1	DDR DATA STROBE FOR DATA[15:8] (Differential+)	I/O	L1	L1
ddr_dqsn0	DDR DATA STROBE FOR DATA[7:0] (Differential-)	I/O	R2	P2
ddr_dqsn1	DDR DATA STROBE FOR DATA[15:8] (Differential-)	I/O	L2	L2
ddr_nck	DDR SDRAM CLOCK OUTPUT (Differential-)	O	C1	D1
ddr_odt	ODT OUTPUT	O	G1	G1
ddr_rasn	DDR SDRAM ROW ADDRESS STROBE OUTPUT (ACTIVE LOW)	O	F2	G4
ddr_resetn	DDR3/DDR3L RESET OUTPUT (ACTIVE LOW)	O	G2	G2
ddr_vref	Voltage Reference Input	A	H4	J4
ddr_vtp	VTP Compensation Resistor	I	J1	J3
ddr_wen	DDR SDRAM WRITE ENABLE OUTPUT (ACTIVE LOW)	O	A4	B2

Table 2-12. External Memory Interfaces/General Purpose Memory Controller Signals Description

SIGNAL NAME [1]	DESCRIPTION [2]	TYPE [3]	ZCE BALL [4]	ZCZ BALL [4]
gpmc_a0	GPMC Address	O	U1	R1, R13
gpmc_a1	GPMC Address	O	U2, U7	R2, U5, V14
gpmc_a10	GPMC Address	O	W5	T16, V5
gpmc_a11	GPMC Address	O	W7	R6, V17
gpmc_a12	GPMC Address	O	V4	U1
gpmc_a13	GPMC Address	O	W4	U2
gpmc_a14	GPMC Address	O	U5	U3
gpmc_a15	GPMC Address	O	V5	U4
gpmc_a16	GPMC Address	O	V6	R13, V2
gpmc_a17	GPMC Address	O	U6	V14, V3
gpmc_a18	GPMC Address	O	W6	U14, V4
gpmc_a19	GPMC Address	O	V7	T14, T5
gpmc_a2	GPMC Address	O	T7, V1	R3, R5, U14
gpmc_a20	GPMC Address	O	H19	F17, R14
gpmc_a21	GPMC Address	O	H18	F18, V15
gpmc_a22	GPMC Address	O	H17	G15, U15
gpmc_a23	GPMC Address	O	G18	G16, T15
gpmc_a24	GPMC Address	O	G19	G17, V16

Copyright © 2011–2013, Texas Instruments Incorporated

Table 2-12. External Memory Interfaces/General Purpose Memory Controller Signals Description (continued)

SIGNAL NAME [1]	DESCRIPTION [2]	TYPE [3]	ZCE BALL [4]	ZCZ BALL [4]
gpmc_a25	GPMC Address	O	G17	G18, U16
gpmc_a26	GPMC Address	O	NA	T16
gpmc_a27	GPMC Address	O	NA	V17
gpmc_a3	GPMC Address	O	U17, V2	R4, T13, T14
gpmc_a4	GPMC Address	O	W2	R14, T1
gpmc_a5	GPMC Address	O	W3	T2, V15
gpmc_a6	GPMC Address	O	V3	T3, U15
gpmc_a7	GPMC Address	O	U3	T15, T4
gpmc_a8	GPMC Address	O	U7	U5, V16
gpmc_a9	GPMC Address	O	T7	R5, U16
gpmc_ad0	GPMC Address and Data	I/O	W10	U7
gpmc_ad1	GPMC Address and Data	I/O	V9	V7
gpmc_ad10	GPMC Address and Data	I/O	T12	T11
gpmc_ad11	GPMC Address and Data	I/O	U12	U12
gpmc_ad12	GPMC Address and Data	I/O	U13	T12
gpmc_ad13	GPMC Address and Data	I/O	T13	R12
gpmc_ad14	GPMC Address and Data	I/O	W17	V13
gpmc_ad15	GPMC Address and Data	I/O	V17	U13
gpmc_ad2	GPMC Address and Data	I/O	V12	R8
gpmc_ad3	GPMC Address and Data	I/O	W13	T8
gpmc_ad4	GPMC Address and Data	I/O	V13	U8
gpmc_ad5	GPMC Address and Data	I/O	W14	V8
gpmc_ad6	GPMC Address and Data	I/O	U14	R9
gpmc_ad7	GPMC Address and Data	I/O	W15	T9
gpmc_ad8	GPMC Address and Data	I/O	V15	U10
gpmc_ad9	GPMC Address and Data	I/O	W16	T10
gpmc_advn_ale	GPMC Address Valid / Address Latch Enable	O	V10	R7
gpmc_be0n_cle	GPMC Byte Enable 0 / Command Latch Enable	O	V8	T6
gpmc_be1n	GPMC Byte Enable 1	O	U15, V18	U18, V9
gpmc_clk	GPMC Clock	I/O	V14, V16	U9, V12
gpmc_csn0	GPMC Chip Select	O	W8	V6
gpmc_csn1	GPMC Chip Select	O	V14	U9
gpmc_csn2	GPMC Chip Select	O	U15	V9
gpmc_csn3	GPMC Chip Select	O	U17	T13
gpmc_csn4	GPMC Chip Select	O	R15	T17
gpmc_csn5	GPMC Chip Select	O	W18	U17
gpmc_csn6	GPMC Chip Select	O	V18	U18
gpmc_dir	GPMC Data Direction	O	V18	U18
gpmc_oen_ren	GPMC Output / Read Enable	O	W9	T7
gpmc_wait0	GPMC Wait 0	I	R15	T17
gpmc_wait1	GPMC Wait 1	I	V16	V12
gpmc_wen	GPMC Write Enable	O	U8	U6
gpmc_wpn	GPMC Write Protect	O	W18	U17

Copyright © 2011–2013, Texas Instruments Incorporated

2.3.2 General Purpose IOs

Table 2-13. General Purpose IOs/GPIO0 Signals Description

SIGNAL NAME [1]	DESCRIPTION [2]	TYPE [3]	ZCE BALL [4]	ZCZ BALL [4]
gpio0_0	GPIO	I/O	P17	M17
gpio0_1	GPIO	I/O	R19	M18
gpio0_10	GPIO	I/O	W6	V4
gpio0_11	GPIO	I/O	V7	T5
gpio0_12	GPIO	I/O	E17	D18
gpio0_13	GPIO	I/O	D19	D17
gpio0_14	GPIO	I/O	D18	D16
gpio0_15	GPIO	I/O	C19	D15
gpio0_16	GPIO	I/O	M17	J18
gpio0_17	GPIO	I/O	N18	K15
gpio0_18	GPIO	I/O	G16	F16
gpio0_19	GPIO	I/O	C15	A15
gpio0_2	GPIO	I/O	A18	A17
gpio0_20	GPIO	I/O	B15	D14
gpio0_21	GPIO	I/O	M18	K16
gpio0_22	GPIO	I/O	V15	U10
gpio0_23	GPIO	I/O	W16	T10
gpio0_26	GPIO	I/O	T12	T11
gpio0_27	GPIO	I/O	U12	U12
gpio0_28	GPIO	I/O	L18	K17
gpio0_29	GPIO	I/O	K18	H18
gpio0_3	GPIO	I/O	B18	B17
gpio0_30	GPIO	I/O	R15	T17
gpio0_31	GPIO	I/O	W18	U17
gpio0_4	GPIO	I/O	B17	B16
gpio0_5	GPIO	I/O	A17	A16
gpio0_6	GPIO	I/O	B16	C15
gpio0_7	GPIO	I/O	E18	C18
gpio0_8	GPIO	I/O	V6	V2
gpio0_9	GPIO	I/O	U6	V3

Table 2-14. General Purpose IOs/GPIO1 Signals Description

SIGNAL NAME [1]	DESCRIPTION [2]	TYPE [3]	ZCE BALL [4]	ZCZ BALL [4]
gpio1_0	GPIO	I/O	W10	U7
gpio1_1	GPIO	I/O	V9	V7
gpio1_10	GPIO	I/O	E19	E15
gpio1_11	GPIO	I/O	F17	E16
gpio1_12	GPIO	I/O	U13	T12
gpio1_13	GPIO	I/O	T13	R12
gpio1_14	GPIO	I/O	W17	V13
gpio1_15	GPIO	I/O	V17	U13
gpio1_16	GPIO	I/O	NA	R13
gpio1_17	GPIO	I/O	NA	V14
gpio1_18	GPIO	I/O	NA	U14

Copyright © 2011–2013, Texas Instruments Incorporated

Table 2-14. General Purpose IOs/GPIO1 Signals Description (continued)

SIGNAL NAME [1]	DESCRIPTION [2]	TYPE [3]	ZCE BALL [4]	ZCZ BALL [4]
gpio1_19	GPIO	I/O	NA	T14
gpio1_2	GPIO	I/O	V12	R8
gpio1_20	GPIO	I/O	NA	R14
gpio1_21	GPIO	I/O	NA	V15
gpio1_22	GPIO	I/O	NA	U15
gpio1_23	GPIO	I/O	NA	T15
gpio1_24	GPIO	I/O	NA	V16
gpio1_25	GPIO	I/O	NA	U16
gpio1_26	GPIO	I/O	NA	T16
gpio1_27	GPIO	I/O	NA	V17
gpio1_28	GPIO	I/O	V18	U18
gpio1_29	GPIO	I/O	W8	V6
gpio1_3	GPIO	I/O	W13	T8
gpio1_30	GPIO	I/O	V14	U9
gpio1_31	GPIO	I/O	U15	V9
gpio1_4	GPIO	I/O	V13	U8
gpio1_5	GPIO	I/O	W14	V8
gpio1_6	GPIO	I/O	U14	R9
gpio1_7	GPIO	I/O	W15	T9
gpio1_8	GPIO	I/O	F19	E18
gpio1_9	GPIO	I/O	F18	E17

Table 2-15. General Purpose IOs/GPIO2 Signals Description

SIGNAL NAME [1]	DESCRIPTION [2]	TYPE [3]	ZCE BALL [4]	ZCZ BALL [4]
gpio2_0	GPIO	I/O	U17	T13
gpio2_1	GPIO	I/O	V16	V12
gpio2_10	GPIO	I/O	W2	T1
gpio2_11	GPIO	I/O	W3	T2
gpio2_12	GPIO	I/O	V3	T3
gpio2_13	GPIO	I/O	U3	T4
gpio2_14	GPIO	I/O	V4	U1
gpio2_15	GPIO	I/O	W4	U2
gpio2_16	GPIO	I/O	U5	U3
gpio2_17	GPIO	I/O	V5	U4
gpio2_18	GPIO	I/O	N17	L17
gpio2_19	GPIO	I/O	N16	L16
gpio2_2	GPIO	I/O	V10	R7
gpio2_20	GPIO	I/O	P19	L15
gpio2_21	GPIO	I/O	P18	M16
gpio2_22	GPIO	I/O	U7	U5
gpio2_23	GPIO	I/O	T7	R5
gpio2_24	GPIO	I/O	W5	V5
gpio2_25	GPIO	I/O	W7	R6
gpio2_26	GPIO	I/O	H19	F17
gpio2_27	GPIO	I/O	H18	F18
gpio2_28	GPIO	I/O	H17	G15

Copyright © 2011–2013, Texas Instruments Incorporated

Table 2-15. General Purpose IOs/GPIO2 Signals Description (continued)

SIGNAL NAME [1]	DESCRIPTION [2]	TYPE [3]	ZCE BALL [4]	ZCZ BALL [4]
gpio2_29	GPIO	I/O	G18	G16
gpio2_3	GPIO	I/O	W9	T7
gpio2_30	GPIO	I/O	G19	G17
gpio2_31	GPIO	I/O	G17	G18
gpio2_4	GPIO	I/O	U8	U6
gpio2_5	GPIO	I/O	V8	T6
gpio2_6	GPIO	I/O	U1	R1
gpio2_7	GPIO	I/O	U2	R2
gpio2_8	GPIO	I/O	V1	R3
gpio2_9	GPIO	I/O	V2	R4

Table 2-16. General Purpose IOs/GPIO3 Signals Description

SIGNAL NAME [1]	DESCRIPTION [2]	TYPE [3]	ZCE BALL [4]	ZCZ BALL [4]
gpio3_0	GPIO	I/O	J19	H16
gpio3_1	GPIO	I/O	J18	H17
gpio3_10	GPIO	I/O	M19	L18
gpio3_13	GPIO	I/O	NA	F15
gpio3_14	GPIO	I/O	NA	A13
gpio3_15	GPIO	I/O	NA	B13
gpio3_16	GPIO	I/O	NA	D12
gpio3_17	GPIO	I/O	NA	C12
gpio3_18	GPIO	I/O	NA	B12
gpio3_19	GPIO	I/O	NA	C13
gpio3_2	GPIO	I/O	K19	J15
gpio3_20	GPIO	I/O	NA	D13
gpio3_21	GPIO	I/O	NA	A14
gpio3_3	GPIO	I/O	K17	J16
gpio3_4	GPIO	I/O	L19	J17
gpio3_5	GPIO	I/O	C18	C17
gpio3_6	GPIO	I/O	B19	C16
gpio3_7	GPIO	I/O	A15	C14
gpio3_8	GPIO	I/O	D14	B14
gpio3_9	GPIO	I/O	N19	K18

Copyright © 2011–2013, Texas Instruments Incorporated

2.3.3 Miscellaneous

Table 2-17. Miscellaneous/Miscellaneous Signals Description

SIGNAL NAME [1]	DESCRIPTION [2]	TYPE [3]	ZCE BALL [4]	ZCZ BALL [4]
clkout1	Clock out1	O	C15	A15
clkout2	Clock out2	O	B15	D14
ENZ_KALDO_1P8V	Active low enable input for internal CAP_VDD_RTC voltage regulator	I	A7	B4
EXT_WAKEUP	EXT_WAKEUP input	I	B5	C5
nNMI	External Interrupt to ARM Cortext A8 core	I	C17	B18
nRESETIN_OUT	Active low Warm Reset	I/OD	A16	A10
OSC0_IN	High frequency oscillator input	I	W11	V10
OSC0_OUT	High frequency oscillator output	O	W12	U11
OSC1_IN	Low frequency (32.768 KHz) Real Time Clock oscillator input	I	A6	A6
OSC1_OUT	Low frequency (32.768 KHz) Real Time Clock oscillator output	O	A5	A4
PMIC_POWER_EN	PMIC_POWER_EN output	O	C7	C6
porz	Active low Power on Reset	I	E15	B15
RTC_PORz	Active low RTC reset input	I	B7	B5
tclkin	Timer Clock In	I	B15	D14
xdma_event_intr0	External DMA Event or Interrupt 0	I	C15	A15
xdma_event_intr1	External DMA Event or Interrupt 1	I	B15	D14
xdma_event_intr2	External DMA Event or Interrupt 2	I	B16, E18, K18	C15, C18, H18

Copyright © 2011–2013, Texas Instruments Incorporated

2.3.3.1 eCAP

Table 2-18. eCAP/eCAP0 Signals Description

SIGNAL NAME [1]	DESCRIPTION [2]	TYPE [3]	ZCE BALL [4]	ZCZ BALL [4]
eCAP0_in_PWM0_out	Enhanced Capture 0 input or Auxiliary PWM0 output	I/O	E18	C18

Table 2-19. eCAP/eCAP1 Signals Description

SIGNAL NAME [1]	DESCRIPTION [2]	TYPE [3]	ZCE BALL [4]	ZCZ BALL [4]
eCAP1_in_PWM1_out	Enhanced Capture 1 input or Auxiliary PWM1 output	I/O	B16, B19, F17	C15, C16, E16

Table 2-20. eCAP/eCAP2 Signals Description

SIGNAL NAME [1]	DESCRIPTION [2]	TYPE [3]	ZCE BALL [4]	ZCZ BALL [4]
eCAP2_in_PWM2_out	Enhanced Capture 2 input or Auxiliary PWM2 output	I/O	C18, E19	C12, C17, E15

Copyright © 2011–2013, Texas Instruments Incorporated

2.3.3.2 eHRPWM

Table 2-21. eHRPWM/eHRPWM0 Signals Description

SIGNAL NAME [1]	DESCRIPTION [2]	TYPE [3]	ZCE BALL [4]	ZCZ BALL [4]
ehrpwm0A	eHRPWM0 A output.	O	A18	A13, A17
ehrpwm0B	eHRPWM0 B output.	O	B18	B13, B17
ehrpwm0_synci	Sync input to eHRPWM0 module from an external pin	I	A17	A16, C12
ehrpwm0_synco	Sync Output from eHRPWM0 module to an external pin	O	U12, V2, W4	R4, U12, U2, V14
ehrpwm0_tripzone_input	eHRPWM0 trip zone input	I	B17	B16, D12

Table 2-22. eHRPWM/eHRPWM1 Signals Description

SIGNAL NAME [1]	DESCRIPTION [2]	TYPE [3]	ZCE BALL [4]	ZCZ BALL [4]
ehrpwm1A	eHRPWM1 A output.	O	U5	U14, U3
ehrpwm1B	eHRPWM1 B output.	O	V5	T14, U4
ehrpwm1_tripzone_input	eHRPWM1 trip zone input	I	V4	R13, U1

Table 2-23. eHRPWM/eHRPWM2 Signals Description

SIGNAL NAME [1]	DESCRIPTION [2]	TYPE [3]	ZCE BALL [4]	ZCZ BALL [4]
ehrpwm2A	eHRPWM2 A output.	O	U1, V15	R1, U10
ehrpwm2B	eHRPWM2 B output.	O	U2, W16	R2, T10
ehrpwm2_tripzone_input	eHRPWM2 trip zone input	I	T12, V1	R3, T11

Copyright © 2011–2013, Texas Instruments Incorporated

2.3.3.3 eQEP

Table 2-24. eQEP/eQEP0 Signals Description

SIGNAL NAME [1]	DESCRIPTION [2]	TYPE [3]	ZCE BALL [4]	ZCZ BALL [4]
eQEP0A_in	eQEP0A quadrature input	I	M18	B12, K16
eQEP0B_in	eQEP0B quadrature input	I	L18	C13, K17
eQEP0_index	eQEP0 index.	I/O	K17	D13, J16
eQEP0_strobe	eQEP0 strobe.	I/O	P19	A14, L15

Table 2-25. eQEP/eQEP1 Signals Description

SIGNAL NAME [1]	DESCRIPTION [2]	TYPE [3]	ZCE BALL [4]	ZCZ BALL [4]
eQEP1A_in	eQEP1A quadrature input	I	V6	R14, V2
eQEP1B_in	eQEP1B quadrature input	I	U6	V15, V3
eQEP1_index	eQEP1 index.	I/O	W6	U15, V4
eQEP1_strobe	eQEP1 strobe.	I/O	V7	T15, T5

Table 2-26. eQEP/eQEP2 Signals Description

SIGNAL NAME [1]	DESCRIPTION [2]	TYPE [3]	ZCE BALL [4]	ZCZ BALL [4]
eQEP2A_in	eQEP2A quadrature input	I	U13, W2	T1, T12
eQEP2B_in	eQEP2B quadrature input	I	T13, W3	R12, T2
eQEP2_index	eQEP2 index.	I/O	V3, W17	T3, V13
eQEP2_strobe	eQEP2 strobe.	I/O	U3, V17	T4, U13

Copyright © 2011–2013, Texas Instruments Incorporated

2.3.3.4 Timer

Table 2-27. Timer/Timer4 Signals Description

SIGNAL NAME [1]	DESCRIPTION [2]	TYPE [3]	ZCE BALL [4]	ZCZ BALL [4]
timer4	Timer trigger event / PWM out	I/O	C15, C18, K17, V10	A15, C17, J16, R7

Table 2-28. Timer/Timer5 Signals Description

SIGNAL NAME [1]	DESCRIPTION [2]	TYPE [3]	ZCE BALL [4]	ZCZ BALL [4]
timer5	Timer trigger event / PWM out	I/O	D19, H19, R19, V8	D17, F17, M18, T6

Table 2-29. Timer/Timer6 Signals Description

SIGNAL NAME [1]	DESCRIPTION [2]	TYPE [3]	ZCE BALL [4]	ZCZ BALL [4]
timer6	Timer trigger event / PWM out	I/O	E17, H18, P17, U8	D18, F18, M17, U6

Table 2-30. Timer/Timer7 Signals Description

SIGNAL NAME [1]	DESCRIPTION [2]	TYPE [3]	ZCE BALL [4]	ZCZ BALL [4]
timer7	Timer trigger event / PWM out	I/O	B15, B19, F19, W9	C16, D14, E18, T7

Copyright © 2011–2013, Texas Instruments Incorporated

2.3.4 PRU-ICSS

Table 2-31. PRU-ICSS/eCAP Signals Description

SIGNAL NAME [1]	DESCRIPTION [2]	TYPE [3]	ZCE BALL [4]	ZCZ BALL [4]
pr1_ecap0_ecap_capin_apwm_o	Enhanced capture input or Auxiliary PWM out	I/O	E18, V17	C18, U13

Table 2-32. PRU-ICSS/ECAT Signals Description

SIGNAL NAME [1]	DESCRIPTION [2]	TYPE [3]	ZCE BALL [4]	ZCZ BALL [4]
pr1_edc_latch0_in	Data In	I	E17	D18
pr1_edc_latch1_in	Data In	I	D19	D17
pr1_edc_sync0_out	Data Out	O	F19	E18
pr1_edc_sync1_out	Data Out	O	F18	E17
pr1_edio_data_in0	Data In	I	B17	B16
pr1_edio_data_in1	Data In	I	A17	A16
pr1_edio_data_in2	Data In	I	U7	U5
pr1_edio_data_in3	Data In	I	T7	R5
pr1_edio_data_in4	Data In	I	W5	V5
pr1_edio_data_in5	Data In	I	W7	R6
pr1_edio_data_in6	Data In	I	V14, V3	T3, U9
pr1_edio_data_in7	Data In	I	U15, U3	T4, V9
pr1_edio_data_out0	Data Out	O	B17	B16
pr1_edio_data_out1	Data Out	O	A17	A16
pr1_edio_data_out2	Data Out	O	U7	U5
pr1_edio_data_out3	Data Out	O	T7	R5
pr1_edio_data_out4	Data Out	O	W5	V5
pr1_edio_data_out5	Data Out	O	W7	R6
pr1_edio_data_out6	Data Out	O	V14, V3	T3, U9
pr1_edio_data_out7	Data Out	O	U15, U3	T4, V9
pr1_edio_latch_in	Latch In	I	B18	B17
pr1_edio_sof	Start of Frame	O	A18	A17

Table 2-33. PRU-ICSS/MDIO Signals Description

SIGNAL NAME [1]	DESCRIPTION [2]	TYPE [3]	ZCE BALL [4]	ZCZ BALL [4]
pr1_mdio_data	MDIO Data	I/O	U17	T13
pr1_mdio_mdclk	MDIO Clk	O	V16	V12

Table 2-34. PRU-ICSS/MII0 Signals Description

SIGNAL NAME [1]	DESCRIPTION [2]	TYPE [3]	ZCE BALL [4]	ZCZ BALL [4]
pr1_mii0_col	MII Collision Detect	I	W16	T10
pr1_mii0_crs	MII Carrier Sense	I	U17, W5	T13, V5
pr1_mii0_rxd0	MII Receive Data bit 0	I	V5	U4
pr1_mii0_rxd1	MII Receive Data bit 1	I	U5	U3
pr1_mii0_rxd2	MII Receive Data bit 2	I	W4	U2
pr1_mii0_rxd3	MII Receive Data bit 3	I	V4	U1
pr1_mii0_rxdv	MII Receive Data Valid	I	V7	T5
pr1_mii0_rxer	MII Receive Data Error	I	U6	V3

Copyright © 2011–2013, Texas Instruments Incorporated

Table 2-34. PRU-ICSS/MII0 Signals Description (continued)

SIGNAL NAME [1]	DESCRIPTION [2]	TYPE [3]	ZCE BALL [4]	ZCZ BALL [4]
pr1_mii0_rxlink	MII Receive Link	I	V6	V2
pr1_mii0_txd0	MII Transmit Data bit 0	O	W17, W3	T2, V13
pr1_mii0_txd1	MII Transmit Data bit 1	O	T13, W2	R12, T1
pr1_mii0_txd2	MII Transmit Data bit 2	O	U13, V2	R4, T12
pr1_mii0_txd3	MII Transmit Data bit 3	O	U12, V1	R3, U12
pr1_mii0_txen	MII Transmit Enable	O	T12, U2	R2, T11
pr1_mii_mr0_clk	MII Receive Clock	I	W6	V4
pr1_mii_mt0_clk	MII Transmit Clock	I	U1, V15	R1, U10

Table 2-35. PRU-ICSS/MII1 Signals Description

SIGNAL NAME [1]	DESCRIPTION [2]	TYPE [3]	ZCE BALL [4]	ZCZ BALL [4]
pr1_mii1_col	MII Collision Detect	I	R15	T17
pr1_mii1_crs	MII Carrier Sense	I	V16, W7	R6, V12
pr1_mii1_rxd0	MII Receive Data bit 0	I	NA	V16
pr1_mii1_rxd1	MII Receive Data bit 1	I	NA	T15
pr1_mii1_rxd2	MII Receive Data bit 2	I	NA	U15
pr1_mii1_rxd3	MII Receive Data bit 3	I	NA	V15
pr1_mii1_rxdv	MII Receive Data Valid	I	NA	T16
pr1_mii1_rxer	MII Receive Data Error	I	NA	V17
pr1_mii1_rxlink	MII Receive Link	I	V18	U18
pr1_mii1_txd0	MII Transmit Data bit 0	O	NA	R14
pr1_mii1_txd1	MII Transmit Data bit 1	O	NA	T14
pr1_mii1_txd2	MII Transmit Data bit 2	O	NA	U14
pr1_mii1_txd3	MII Transmit Data bit 3	O	NA	V14
pr1_mii1_txen	MII Transmit Enable	O	W18	U17
pr1_mii_mr1_clk	MII Receive Clock	I	NA	U16
pr1_mii_mt1_clk	MII Transmit Clock	I	NA	R13

Table 2-36. PRU-ICSS/UART0 Signals Description

SIGNAL NAME [1]	DESCRIPTION [2]	TYPE [3]	ZCE BALL [4]	ZCZ BALL [4]
pr1_uart0_cts_n	UART Clear to Send	I	A18, E17	A17, D18
pr1_uart0_rts_n	UART Request to Send	O	B18, D19	B17, D17
pr1_uart0_rxd	UART Receive Data	I	B17, D18	B16, D16
pr1_uart0_txd	UART Transmit Data	O	A17, C19	A16, D15

Copyright © 2011–2013, Texas Instruments Incorporated

2.3.4.1 PRU0

Table 2-37. PRU0/General Purpose Inputs Signals Description

SIGNAL NAME [1]	DESCRIPTION [2]	TYPE [3]	ZCE BALL [4]	ZCZ BALL [4]
pr1_pru0_pru_r31_0	PRU0 Data In	I	NA	A13
pr1_pru0_pru_r31_1	PRU0 Data In	I	NA	B13
pr1_pru0_pru_r31_10	PRU0 Data In	I	H17	G15
pr1_pru0_pru_r31_11	PRU0 Data In	I	G18	G16
pr1_pru0_pru_r31_12	PRU0 Data In	I	G19	G17
pr1_pru0_pru_r31_13	PRU0 Data In	I	G17	G18
pr1_pru0_pru_r31_14	PRU0 Data In	I	W17	V13
pr1_pru0_pru_r31_15	PRU0 Data In	I	V17	U13
pr1_pru0_pru_r31_16	PRU0 Data In Capture Enable	I	B15, C19	D14, D15
pr1_pru0_pru_r31_2	PRU0 Data In	I	NA	D12
pr1_pru0_pru_r31_3	PRU0 Data In	I	NA	C12
pr1_pru0_pru_r31_4	PRU0 Data In	I	NA	B12
pr1_pru0_pru_r31_5	PRU0 Data In	I	NA	C13
pr1_pru0_pru_r31_6	PRU0 Data In	I	NA	D13
pr1_pru0_pru_r31_7	PRU0 Data In	I	NA	A14
pr1_pru0_pru_r31_8	PRU0 Data In	I	H19	F17
pr1_pru0_pru_r31_9	PRU0 Data In	I	H18	F18

Table 2-38. PRU0/General Purpose Outputs Signals Description

SIGNAL NAME [1]	DESCRIPTION [2]	TYPE [3]	ZCE BALL [4]	ZCZ BALL [4]
pr1_pru0_pru_r30_0	PRU0 Data Out	O	NA	A13
pr1_pru0_pru_r30_1	PRU0 Data Out	O	NA	B13
pr1_pru0_pru_r30_10	PRU0 Data Out	O	H17	G15
pr1_pru0_pru_r30_11	PRU0 Data Out	O	G18	G16
pr1_pru0_pru_r30_12	PRU0 Data Out	O	G19	G17
pr1_pru0_pru_r30_13	PRU0 Data Out	O	G17	G18
pr1_pru0_pru_r30_14	PRU0 Data Out	O	U13	T12
pr1_pru0_pru_r30_15	PRU0 Data Out	O	T13	R12
pr1_pru0_pru_r30_2	PRU0 Data Out	O	NA	D12
pr1_pru0_pru_r30_3	PRU0 Data Out	O	NA	C12
pr1_pru0_pru_r30_4	PRU0 Data Out	O	NA	B12
pr1_pru0_pru_r30_5	PRU0 Data Out	O	NA	C13
pr1_pru0_pru_r30_6	PRU0 Data Out	O	NA	D13
pr1_pru0_pru_r30_7	PRU0 Data Out	O	NA	A14
pr1_pru0_pru_r30_8	PRU0 Data Out	O	H19	F17
pr1_pru0_pru_r30_9	PRU0 Data Out	O	H18	F18

Copyright © 2011–2013, Texas Instruments Incorporated

2.3.4.2 PRU1

Table 2-39. PRU1/General Purpose Inputs Signals Description

SIGNAL NAME [1]	DESCRIPTION [2]	TYPE [3]	ZCE BALL [4]	ZCZ BALL [4]
pr1_pru1_pru_r31_0	PRU1 Data In	I	U1	R1
pr1_pru1_pru_r31_1	PRU1 Data In	I	U2	R2
pr1_pru1_pru_r31_10	PRU1 Data In	I	W5	V5
pr1_pru1_pru_r31_11	PRU1 Data In	I	W7	R6
pr1_pru1_pru_r31_12	PRU1 Data In	I	V14	U9
pr1_pru1_pru_r31_13	PRU1 Data In	I	U15	V9
pr1_pru1_pru_r31_14	PRU1 Data In	I	E19	E15
pr1_pru1_pru_r31_15	PRU1 Data In	I	F17	E16
pr1_pru1_pru_r31_16	PRU1 Data In Capture Enable	I	C15, D18	A15, D16
pr1_pru1_pru_r31_2	PRU1 Data In	I	V1	R3
pr1_pru1_pru_r31_3	PRU1 Data In	I	V2	R4
pr1_pru1_pru_r31_4	PRU1 Data In	I	W2	T1
pr1_pru1_pru_r31_5	PRU1 Data In	I	W3	T2
pr1_pru1_pru_r31_6	PRU1 Data In	I	V3	T3
pr1_pru1_pru_r31_7	PRU1 Data In	I	U3	T4
pr1_pru1_pru_r31_8	PRU1 Data In	I	U7	U5
pr1_pru1_pru_r31_9	PRU1 Data In	I	T7	R5

Table 2-40. PRU1/General Purpose Outputs Signals Description

SIGNAL NAME [1]	DESCRIPTION [2]	TYPE [3]	ZCE BALL [4]	ZCZ BALL [4]
pr1_pru1_pru_r30_0	PRU1 Data Out	O	U1	R1
pr1_pru1_pru_r30_1	PRU1 Data Out	O	U2	R2
pr1_pru1_pru_r30_10	PRU1 Data Out	O	W5	V5
pr1_pru1_pru_r30_11	PRU1 Data Out	O	W7	R6
pr1_pru1_pru_r30_12	PRU1 Data Out	O	V14	U9
pr1_pru1_pru_r30_13	PRU1 Data Out	O	U15	V9
pr1_pru1_pru_r30_14	PRU1 Data Out	O	E19	E15
pr1_pru1_pru_r30_15	PRU1 Data Out	O	F17	E16
pr1_pru1_pru_r30_2	PRU1 Data Out	O	V1	R3
pr1_pru1_pru_r30_3	PRU1 Data Out	O	V2	R4
pr1_pru1_pru_r30_4	PRU1 Data Out	O	W2	T1
pr1_pru1_pru_r30_5	PRU1 Data Out	O	W3	T2
pr1_pru1_pru_r30_6	PRU1 Data Out	O	V3	T3
pr1_pru1_pru_r30_7	PRU1 Data Out	O	U3	T4
pr1_pru1_pru_r30_8	PRU1 Data Out	O	U7	U5
pr1_pru1_pru_r30_9	PRU1 Data Out	O	T7	R5

Copyright © 2011–2013, Texas Instruments Incorporated

2.3.5 Removable Media Interfaces

Table 2-41. Removable Media Interfaces/MMC0 Signals Description

SIGNAL NAME [1]	DESCRIPTION [2]	TYPE [3]	ZCE BALL [4]	ZCZ BALL [4]
mmc0_clk	MMC/SD/SDIO Clock	I/O	G19	G17
mmc0_cmd	MMC/SD/SDIO Command	I/O	G17	G18
mmc0_dat0	MMC/SD/SDIO Data Bus	I/O	G18	G16
mmc0_dat1	MMC/SD/SDIO Data Bus	I/O	H17	G15
mmc0_dat2	MMC/SD/SDIO Data Bus	I/O	H18	F18
mmc0_dat3	MMC/SD/SDIO Data Bus	I/O	H19	F17
mmc0_dat4	MMC/SD/SDIO Data Bus	I/O	N16	L16
mmc0_dat5	MMC/SD/SDIO Data Bus	I/O	N17	L17
mmc0_dat6	MMC/SD/SDIO Data Bus	I/O	M19	L18
mmc0_dat7	MMC/SD/SDIO Data Bus	I/O	N19	K18
mmc0_pow	MMC/SD Power Switch Control	O	B16, K18	C15, H18
mmc0_sdcd	SD Card Detect	I	B16, P17	A13, C15, M17
mmc0_sdwp	SD Write Protect	I	E18, R19	B12, C18, M18

Table 2-42. Removable Media Interfaces/MMC1 Signals Description

SIGNAL NAME [1]	DESCRIPTION [2]	TYPE [3]	ZCE BALL [4]	ZCZ BALL [4]
mmc1_clk	MMC/SD/SDIO Clock	I/O	L18, R19, V14	K17, M18, U9
mmc1_cmd	MMC/SD/SDIO Command	I/O	M18, P17, U15	K16, M17, V9
mmc1_dat0	MMC/SD/SDIO Data Bus	I/O	N19, V15, W10	K18, U10, U7
mmc1_dat1	MMC/SD/SDIO Data Bus	I/O	M19, V9, W16	L18, T10, V7
mmc1_dat2	MMC/SD/SDIO Data Bus	I/O	N17, T12, V12	L17, R8, T11
mmc1_dat3	MMC/SD/SDIO Data Bus	I/O	N16, U12, W13	L16, T8, U12
mmc1_dat4	MMC/SD/SDIO Data Bus	I/O	U13, V13	T12, U8
mmc1_dat5	MMC/SD/SDIO Data Bus	I/O	T13, W14	R12, V8
mmc1_dat6	MMC/SD/SDIO Data Bus	I/O	U14, W17	R9, V13
mmc1_dat7	MMC/SD/SDIO Data Bus	I/O	V17, W15	T9, U13
mmc1_sdcd	SD Card Detect	I	R15	B13, T17
mmc1_sdwp	SD Write Protect	I	B17, D18	B16, D16

Table 2-43. Removable Media Interfaces/MMC2 Signals Description

SIGNAL NAME [1]	DESCRIPTION [2]	TYPE [3]	ZCE BALL [4]	ZCZ BALL [4]
mmc2_clk	MMC/SD/SDIO Clock	I/O	P19, R19, V16	L15, M18, V12
mmc2_cmd	MMC/SD/SDIO Command	I/O	K17, P17, U17	J16, M17, T13
mmc2_dat0	MMC/SD/SDIO Data Bus	I/O	L19, U13	J17, T12, V14
mmc2_dat1	MMC/SD/SDIO Data Bus	I/O	M17, T13	J18, R12, U14
mmc2_dat2	MMC/SD/SDIO Data Bus	I/O	N18, W17	K15, T14, V13
mmc2_dat3	MMC/SD/SDIO Data Bus	I/O	J19, V17, V18	H16, U13, U18
mmc2_dat4	MMC/SD/SDIO Data Bus	I/O	V15	U10, U15
mmc2_dat5	MMC/SD/SDIO Data Bus	I/O	W16	T10, T15
mmc2_dat6	MMC/SD/SDIO Data Bus	I/O	T12	T11, V16
mmc2_dat7	MMC/SD/SDIO Data Bus	I/O	U12	U12
mmc2_sdcd	SD Card Detect	I	W18	D12, U17
mmc2_sdwp	SD Write Protect	I	A17, C19	A16, D15

Copyright © 2011–2013, Texas Instruments Incorporated

2.3.6 Serial Communication Interfaces

2.3.6.1 CAN

Table 2-44. CAN/DCAN0 Signals Description

SIGNAL NAME [1]	DESCRIPTION [2]	TYPE [3]	ZCE BALL [4]	ZCZ BALL [4]
dcan0_rx	DCAN0 Receive Data	I	D19, F17, N18	D17, E16, K15
dcan0_tx	DCAN0 Transmit Data	O	E17, E19, M17	D18, E15, J18

Table 2-45. CAN/DCAN1 Signals Description

SIGNAL NAME [1]	DESCRIPTION [2]	TYPE [3]	ZCE BALL [4]	ZCZ BALL [4]
dcan1_rx	DCAN1 Receive Data	I	C19, F18, G17	D15, E17, G18
dcan1_tx	DCAN1 Transmit Data	O	D18, F19, G19	D16, E18, G17

Copyright © 2011–2013, Texas Instruments Incorporated

2.3.6.2 GEMAC_CPSW

Table 2-46. GEMAC_CPSW/MDIO Signals Description

SIGNAL NAME [1]	DESCRIPTION [2]	TYPE [3]	ZCE BALL [4]	ZCZ BALL [4]
mdio_clk	MDIO Clk	O	R19	M18
mdio_data	MDIO Data	I/O	P17	M17

Table 2-47. GEMAC_CPSW/MII1 Signals Description

SIGNAL NAME [1]	DESCRIPTION [2]	TYPE [3]	ZCE BALL [4]	ZCZ BALL [4]
gmii1_col	MII Colision	I	J19	H16
gmii1_crs	MII Carrier Sense	I	J18	H17
gmii1_rxclk	MII Receive Clock	I	M19	L18
gmii1_rxd0	MII Receive Data bit 0	I	P18	M16
gmii1_rxd1	MII Receive Data bit 1	I	P19	L15
gmii1_rxd2	MII Receive Data bit 2	I	N16	L16
gmii1_rxd3	MII Receive Data bit 3	I	N17	L17
gmii1_rxdv	MII Receive Data Valid	I	L19	J17
gmii1_rxer	MII Receive Data Error	I	K19	J15
gmii1_txclk	MII Transmit Clock	I	N19	K18
gmii1_txd0	MII Transmit Data bit 0	O	L18	K17
gmii1_txd1	MII Transmit Data bit 1	O	M18	K16
gmii1_txd2	MII Transmit Data bit 2	O	N18	K15
gmii1_txd3	MII Transmit Data bit 3	O	M17	J18
gmii1_txen	MII Transmit Enable	O	K17	J16

Table 2-48. GEMAC_CPSW/MII2 Signals Description

SIGNAL NAME [1]	DESCRIPTION [2]	TYPE [3]	ZCE BALL [4]	ZCZ BALL [4]
gmii2_col	MII Colision	I	V18	U18
gmii2_crs	MII Carrier Sense	I	R15	T17
gmii2_rxclk	MII Receive Clock	I	NA	T15
gmii2_rxd0	MII Receive Data bit 0	I	NA	V17
gmii2_rxd1	MII Receive Data bit 1	I	NA	T16
gmii2_rxd2	MII Receive Data bit 2	I	NA	U16
gmii2_rxd3	MII Receive Data bit 3	I	NA	V16
gmii2_rxdv	MII Receive Data Valid	I	NA	V14
gmii2_rxer	MII Receive Data Error	I	W18	U17
gmii2_txclk	MII Transmit Clock	I	NA	U15
gmii2_txd0	MII Transmit Data bit 0	O	NA	V15
gmii2_txd1	MII Transmit Data bit 1	O	NA	R14
gmii2_txd2	MII Transmit Data bit 2	O	NA	T14
gmii2_txd3	MII Transmit Data bit 3	O	NA	U14
gmii2_txen	MII Transmit Enable	O	NA	R13

Table 2-49. GEMAC_CPSW/RGMII1 Signals Description

SIGNAL NAME [1]	DESCRIPTION [2]	TYPE [3]	ZCE BALL [4]	ZCZ BALL [4]
rgmii1_rclk	RGMII Receive Clock	I	M19	L18

Copyright © 2011–2013, Texas Instruments Incorporated

Table 2-49. GEMAC_CPSW/RGMII1 Signals Description (continued)

SIGNAL NAME [1]	DESCRIPTION [2]	TYPE [3]	ZCE BALL [4]	ZCZ BALL [4]
rgmii1_rctl	RGMII Receive Control	I	L19	J17
rgmii1_rd0	RGMII Receive Data bit 0	I	P18	M16
rgmii1_rd1	RGMII Receive Data bit 1	I	P19	L15
rgmii1_rd2	RGMII Receive Data bit 2	I	N16	L16
rgmii1_rd3	RGMII Receive Data bit 3	I	N17	L17
rgmii1_tclk	RGMII Transmit Clock	O	N19	K18
rgmii1_tctl	RGMII Transmit Control	O	K17	J16
rgmii1_td0	RGMII Transmit Data bit 0	O	L18	K17
rgmii1_td1	RGMII Transmit Data bit 1	O	M18	K16
rgmii1_td2	RGMII Transmit Data bit 2	O	N18	K15
rgmii1_td3	RGMII Transmit Data bit 3	O	M17	J18

Table 2-50. GEMAC_CPSW/RGMII2 Signals Description

SIGNAL NAME [1]	DESCRIPTION [2]	TYPE [3]	ZCE BALL [4]	ZCZ BALL [4]
rgmii2_rclk	RGMII Receive Clock	I	NA	T15
rgmii2_rctl	RGMII Receive Control	I	NA	V14
rgmii2_rd0	RGMII Receive Data bit 0	I	NA	V17
rgmii2_rd1	RGMII Receive Data bit 1	I	NA	T16
rgmii2_rd2	RGMII Receive Data bit 2	I	NA	U16
rgmii2_rd3	RGMII Receive Data bit 3	I	NA	V16
rgmii2_tclk	RGMII Transmit Clock	O	NA	U15
rgmii2_tctl	RGMII Transmit Control	O	NA	R13
rgmii2_td0	RGMII Transmit Data bit 0	O	NA	V15
rgmii2_td1	RGMII Transmit Data bit 1	O	NA	R14
rgmii2_td2	RGMII Transmit Data bit 2	O	NA	T14
rgmii2_td3	RGMII Transmit Data bit 3	O	NA	U14

Table 2-51. GEMAC_CPSW/RMII1 Signals Description

SIGNAL NAME [1]	DESCRIPTION [2]	TYPE [3]	ZCE BALL [4]	ZCZ BALL [4]
rmii1_crs_dv	RMII Carrier Sense / Data Valid	I	J18	H17
rmii1_refclk	RMII Reference Clock	I/O	K18	H18
rmii1_rxd0	RMII Receive Data bit 0	I	P18	M16
rmii1_rxd1	RMII Receive Data bit 1	I	P19	L15
rmii1_rxer	RMII Receive Data Error	I	K19	J15
rmii1_txd0	RMII Transmit Data bit 0	O	L18	K17
rmii1_txd1	RMII Transmit Data bit 1	O	M18	K16
rmii1_txen	RMII Transmit Enable	O	K17	J16

Table 2-52. GEMAC_CPSW/RMII2 Signals Description

SIGNAL NAME [1]	DESCRIPTION [2]	TYPE [3]	ZCE BALL [4]	ZCZ BALL [4]
rmii2_crs_dv	RMII Carrier Sense / Data Valid	I	R15, U17	T13, T17
rmii2_refclk	RMII Reference Clock	I/O	J19	H16
rmii2_rxd0	RMII Receive Data bit 0	I	NA	V17
rmii2_rxd1	RMII Receive Data bit 1	I	NA	T16

Copyright © 2011–2013, Texas Instruments Incorporated

Table 2-52. GEMAC_CPSW/RMII2 Signals Description (continued)

SIGNAL NAME [1]	DESCRIPTION [2]	TYPE [3]	ZCE BALL [4]	ZCZ BALL [4]
rmii2_rxer	RMII Receive Data Error	I	W18	U17
rmii2_txd0	RMII Transmit Data bit 0	O	NA	V15
rmii2_txd1	RMII Transmit Data bit 1	O	NA	R14
rmii2_txen	RMII Transmit Enable	O	NA	R13

2.3.6.3 I2C

Table 2-53. I2C/I2C0 Signals Description

SIGNAL NAME [1]	DESCRIPTION [2]	TYPE [3]	ZCE BALL [4]	ZCZ BALL [4]
I2C0_SCL	I2C0 Clock	I/OD	B19	C16
I2C0_SDA	I2C0 Data	I/OD	C18	C17

Table 2-54. I2C/I2C1 Signals Description

SIGNAL NAME [1]	DESCRIPTION [2]	TYPE [3]	ZCE BALL [4]	ZCZ BALL [4]
I2C1_SCL	I2C1 Clock	I/OD	A17, C19, F18, K19	A16, D15, E17, J15
I2C1_SDA	I2C1 Data	I/OD	B17, D18, F19, J18	B16, D16, E18, H17

Table 2-55. I2C/I2C2 Signals Description

SIGNAL NAME [1]	DESCRIPTION [2]	TYPE [3]	ZCE BALL [4]	ZCZ BALL [4]
I2C2_SCL	I2C2 Clock	I/OD	B18, D19, F17	B17, D17, E16
I2C2_SDA	I2C2 Data	I/OD	A18, E17, E19	A17, D18, E15

Copyright © 2011–2013, Texas Instruments Incorporated

2.3.6.4 McASP

Table 2-56. McASP/MCASP0 Signals Description

SIGNAL NAME [1]	DESCRIPTION [2]	TYPE [3]	ZCE BALL [4]	ZCZ BALL [4]
mcasp0_aclkr	McASP0 Receive Bit Clock	I/O	L19, V18, V6	B12, J17, U18, V2
mcasp0_aclkx	McASP0 Transmit Bit Clock	I/O	N19, V4	A13, K18, U1, V16
mcasp0_ahclkr	McASP0 Receive Master Clock	I/O	V5	C12, U4
mcasp0_ahclkx	McASP0 Transmit Master Clock	I/O	N18, V7	A14, K15, T5
mcasp0_axr0	McASP0 Serial Data (IN/OUT)	I/O	N17, U5	D12, L17, T16, U3
mcasp0_axr1	McASP0 Serial Data (IN/OUT)	I/O	N16, W6	D13, L16, V17, V4
mcasp0_axr2	McASP0 Serial Data (IN/OUT)	I/O	J19, V5, V6	B12, C12, H16, U4, V2
mcasp0_axr3	McASP0 Serial Data (IN/OUT)	I/O	P18, U6, V7	A14, C13, M16, T5, V3
mcasp0_fsr	McASP0 Receive Frame Sync	I/O	M17, U6, V16	C13, J18, V12, V3
mcasp0_fsx	McASP0 Transmit Frame Sync	I/O	M19, W4	B13, L18, U16, U2

Table 2-57. McASP/MCASP1 Signals Description

SIGNAL NAME [1]	DESCRIPTION [2]	TYPE [3]	ZCE BALL [4]	ZCZ BALL [4]
mcasp1_aclkr	McASP1 Receive Bit Clock	I/O	L18, P18	K17, M16
mcasp1_aclkx	McASP1 Transmit Bit Clock	I/O	J18, L19	B12, H17, J17
mcasp1_ahclkr	McASP1 Receive Master Clock	I/O	P18	M16
mcasp1_ahclkx	McASP1 Transmit Master Clock	I/O	K18, P18	H18, M16
mcasp1_axr0	McASP1 Serial Data (IN/OUT)	I/O	K17, N18	D13, J16, K15
mcasp1_axr1	McASP1 Serial Data (IN/OUT)	I/O	M18	A14, K16
mcasp1_axr2	McASP1 Serial Data (IN/OUT)	I/O	J19, L18	H16, K17
mcasp1_axr3	McASP1 Serial Data (IN/OUT)	I/O	K18, P19	H18, L15
mcasp1_fsr	McASP1 Receive Frame Sync	I/O	M18, P19	K16, L15
mcasp1_fsx	McASP1 Transmit Frame Sync	I/O	K19, M17	C13, J15, J18

Copyright © 2011–2013, Texas Instruments Incorporated

2.3.6.5 SPI

Table 2-58. SPI/SPI0 Signals Description

SIGNAL NAME [1]	DESCRIPTION [2]	TYPE [3]	ZCE BALL [4]	ZCZ BALL [4]
spi0_cs0	SPI Chip Select	I/O	A17	A16
spi0_cs1	SPI Chip Select	I/O	B16	C15
spi0_d0	SPI Data	I/O	B18	B17
spi0_d1	SPI Data	I/O	B17	B16
spi0_sclk	SPI Clock	I/O	A18	A17

Table 2-59. SPI/SPI1 Signals Description

SIGNAL NAME [1]	DESCRIPTION [2]	TYPE [3]	ZCE BALL [4]	ZCZ BALL [4]
spi1_cs0	SPI Chip Select	I/O	E17, E19, F18, K18	C12, D18, E15, E17, H18
spi1_cs1	SPI Chip Select	I/O	C15, D19, E18, F17	A15, C18, D17, E16
spi1_d0	SPI Data	I/O	F19, J18	B13, E18, H17
spi1_d1	SPI Data	I/O	F18, K19	D12, E17, J15
spi1_sclk	SPI Clock	I/O	E18, J19	A13, C18, H16

Copyright © 2011–2013, Texas Instruments Incorporated

2.3.6.6 UART

Table 2-60. UART/UART0 Signals Description

SIGNAL NAME [1]	DESCRIPTION [2]	TYPE [3]	ZCE BALL [4]	ZCZ BALL [4]
uart0_ctsn	UART Clear to Send	I	F19	E18
uart0_rtsn	UART Request to Send	O	F18	E17
uart0_rxd	UART Receive Data	I	E19	E15
uart0_txd	UART Transmit Data	O	F17	E16

Table 2-61. UART/UART1 Signals Description

SIGNAL NAME [1]	DESCRIPTION [2]	TYPE [3]	ZCE BALL [4]	ZCZ BALL [4]
uart1_ctsn	UART Clear to Send	I	E17	D18
uart1_dcdn	UART Data Carrier Detect	I	H19, N19	F17, K18
uart1_dsrn	UART Data Set Ready	I	H18, M19	F18, L18
uart1_dtrn	UART Data Terminal Ready	O	H17, N17	G15, L17
uart1_rin	UART Ring Indicator	I	G18, N16	G16, L16
uart1_rtsn	UART Request to Send	O	D19	D17
uart1_rxd	UART Receive Data	I	D18	D16
uart1_txd	UART Transmit Data	O	C19	D15

Table 2-62. UART/UART2 Signals Description

SIGNAL NAME [1]	DESCRIPTION [2]	TYPE [3]	ZCE BALL [4]	ZCZ BALL [4]
uart2_ctsn	UART Clear to Send	I	C18, V4	C17, U1
uart2_rtsn	UART Request to Send	O	B19, W4	C16, U2
uart2_rxd	UART Receive Data	I	A18, G19, J18, N19	A17, G17, H17, K18
uart2_txd	UART Transmit Data	O	B18, G17, K19, M19	B17, G18, J15, L18

Table 2-63. UART/UART3 Signals Description

SIGNAL NAME [1]	DESCRIPTION [2]	TYPE [3]	ZCE BALL [4]	ZCZ BALL [4]
uart3_ctsn	UART Clear to Send	I	G19, P17, U5	G17, M17, U3
uart3_rtsn	UART Request to Send	O	G17, R19, V5	G18, M18, U4
uart3_rxd	UART Receive Data	I	B16, H17, N17	C15, G15, L17
uart3_txd	UART Transmit Data	O	E18, G18, N16	C18, G16, L16

Table 2-64. UART/UART4 Signals Description

SIGNAL NAME [1]	DESCRIPTION [2]	TYPE [3]	ZCE BALL [4]	ZCZ BALL [4]
uart4_ctsn	UART Clear to Send	I	H19, V6	F17, V2
uart4_rtsn	UART Request to Send	O	H18, U6	F18, V3
uart4_rxd	UART Receive Data	I	F19, M17, R15	E18, J18, T17
uart4_txd	UART Transmit Data	O	F18, N18, W18	E17, K15, U17

Copyright © 2011–2013, Texas Instruments Incorporated

Table 2-65. UART/UART5 Signals Description

SIGNAL NAME [1]	DESCRIPTION [2]	TYPE [3]	ZCE BALL [4]	ZCZ BALL [4]
uart5_ctsn	UART Clear to Send	I	H17, J18, W6	G15, H17, V4
uart5_rtsn	UART Request to Send	O	G18, K19, V7	G16, J15, T5
uart5_rxd	UART Receive Data	I	J19, P17, W4, W6	H16, M17, U2, V4
uart5_txd	UART Transmit Data	O	K18, L19, R19, V4	H18, J17, M18, U1

Copyright © 2011–2013, Texas Instruments Incorporated

2.3.6.7 USB

Table 2-66. USB/USB0 Signals Description

SIGNAL NAME [1]	DESCRIPTION [2]	TYPE [3]	ZCE BALL [4]	ZCZ BALL [4]
USB0_CE	USB0 Active high Charger Enable output	A	T18	M15
USB0_DM	USB0 Data minus	A	U18	N18
USB0_DP	USB0 Data plus	A	U19	N17
USB0_DRVVBUS	USB0 Active high VBUS control output	O	G16	F16
USB0_ID	USB0 OTG ID (Micro-A or Micro-B Plug)	A	V19	P16
USB0_VBUS	USB0 VBUS	A	T19	P15

Table 2-67. USB/USB1 Signals Description

SIGNAL NAME [1]	DESCRIPTION [2]	TYPE [3]	ZCE BALL [4]	ZCZ BALL [4]
USB1_CE	USB1 Active high Charger Enable output	A	NA	P18
USB1_DM	USB1 Data minus	A	NA	R18
USB1_DP	USB1 Data plus	A	NA	R17
USB1_DRVVBUS	USB1 Active high VBUS control output	O	NA	F15
USB1_ID	USB1 OTG ID (Micro-A or Micro-B Plug)	A	NA	P17
USB1_VBUS	USB1 VBUS	A	NA	T18

3 Device Operating Conditions

3.1 Absolute Maximum Ratings

Table 3-1. Absolute Maximum Ratings Over Junction Temperature Range (Unless Otherwise Noted)[1][2]

PARAMETER		MIN	MAX	UNIT
VDD_MPU[3]	Supply voltage for the MPU core domain	-0.5	1.5	V
VDD_CORE	Supply voltage range for the core domain	-0.5	1.5	V
CAP_VDD_RTC[4]	Supply voltage range for the RTC core domain	-0.5	1.5	V
VPP[5]	Supply voltage range for the FUSE ROM domain	-0.5	2.2	V
VDDS_RTC	Supply voltage range for the RTC domain	-0.5	2.1	V
VDDS_OSC	Supply voltage range for the System oscillator	-0.5	2.1	V
VDDS_SRAM_CORE_BG	Supply voltage range for the Core SRAM LDOs	-0.5	2.1	V
VDDS_SRAM_MPU_BB	Supply voltage range for the MPU SRAM LDOs	-0.5	2.1	V
VDDS_PLL_DDR	Supply voltage range for the DPLL DDR	-0.5	2.1	V
VDDS_PLL_CORE_LCD	Supply voltage range for the DPLL Core and LCD	-0.5	2.1	V
VDDS_PLL_MPU	Supply voltage range for the DPLL MPU	-0.5	2.1	V
VDDS_DDR	Supply voltage range for the DDR IO domain	-0.5	2.1	V
VDDS	Supply voltage range for all dual-voltage IO domains	-0.5	2.1	V
VDDA1P8V_USB0	Supply voltage range for USBPHY	-0.5	2.1	V
VDDA1P8V_USB1[6]	Supply voltage range for USBPHY	-0.5	2.1	V
VDDA_ADC	Supply voltage range for ADC	-0.5	2.1	V
VDDSHV1	Supply voltage range for the dual-voltage IO domain	-0.5	3.8	V
VDDSHV2[6]	Supply voltage range for the dual-voltage IO domain	-0.5	3.8	V
VDDSHV3[6]	Supply voltage range for the dual-voltage IO domain	-0.5	3.8	V
VDDSHV4	Supply voltage range for the dual-voltage IO domain	-0.5	3.8	V
VDDSHV5	Supply voltage range for the dual-voltage IO domain	-0.5	3.8	V
VDDSHV6	Supply voltage range for the dual-voltage IO domain	-0.5	3.8	V
VDDA3P3V_USB0	Supply voltage range for USBPHY	-0.5	4	V
VDDA3P3V_USB1[6]	Supply voltage range for USBPHY	-0.5	4	V
USB0_VBUS[7]	Supply voltage range for USB VBUS comparator input	-0.5	5.25	V
USB1_VBUS[6][7]	Supply voltage range for USB VBUS comparator input	-0.5	5.25	V
DDR_VREF	Supply voltage range for the DDR SSTL and HSTL reference voltage	-0.3	1.1	V
Steady State Max. Voltage at all IO pins[8]		-0.5V to IO supply voltage + 0.3 V		
USB0_ID[9]	Steady state maximum voltage range for the USB ID input	-0.5	2.1	V
USB1_ID[6][9]	Steady state maximum voltage range for the USB ID input	-0.5	2.1	V
Transient Overshoot and Undershoot specification at IO terminal		25% of corresponding IO supply voltage for up to 30% of signal period		
Storage temperature range, T_{stg}[10]		-55	155	°C
Electrostatic Discharge (ESD) Performance	ESD-HBM (Human Body Model)[11]	±2000		V
	ESD-CDM (Charged-Device Model)[12]	±500		
Latch-up Performance[13]	Class II (105°C)	45		mA

(1) Stresses beyond those listed under "absolute maximum ratings" may cause permanent damage to the device. These are stress ratings only, and functional operation of the device at these or any other conditions beyond those indicated under "recommended operating conditions" is not implied. Exposure to absolute-maximum-rated conditions for extended periods may affect device reliability.

(2) All voltage values are with respect to their associated VSS or VSSA_x.

(3) Not available on the ZCE package. VDD_MPU is merged with VDD_CORE on the ZCE package.

(4) This supply is sourced from an internal LDO when RTC_KALDO_ENn is low. If RTC_KALDO_ENn is high, this supply must be sourced

Copyright © 2011–2013, Texas Instruments Incorporated

from an external power supply.

(5) During functional operation, this pin is a no connect.

(6) Not availabe on the ZCE package.

(7) This terminal is connected to a fail-safe IO and does not have a dependence on any IO supply voltage.

(8) This parameter applies to all IO terminals which are not fail-safe and the requirement applies to all values of IO supply voltage. For example, if the voltage applied to a specific IO supply is 0 volts the valid input voltage range for any IO powered by that supply will be -0.5 to +0.3 volts. Special attention should be applied anytime peripheral devices are not powered from the same power sources used to power the respective IO supply. It is important the attached peripheral never sources a voltage outside the valid input voltage range, including power supply ramp-up and ramp-down sequences.

(9) This terminal is connected to analog circuits in the respective USB PHY. The circuit sources a known current while measuring the voltage to determine if the terminal is connected to VSSA_USB with a resistance less than 10 Ω or greater than 100 kΩ. The terminal should be connected to ground for USB host operation or open-circuit for USB peripheral operation, and should never be connected to any external voltage source.

(10) For tape and reel the storage temperature range is [-10°C; +50°C] with a maximum relative humidity of 70%. It is recommended returning to ambient room temperature before usage.

(11) Based on JEDEC JESD22-A114E [*Electrostatic Discharge (ESD) Sensitivity Testing Human Body Model (HBM)*].

(12) Based on JEDEC JESD22-C101C (*Field-Induced Charged-Device Model Test Method for Electrostatic-Discharge-Withstand Thresholds of Microelectronic Components*).

(13) Based on JEDEC JESD78D [*IC Latch-Up Test*].

Fail-safe IO terminals are designed such they do not have dependencies on the respective IO power supply voltage. This allows external voltage sources to be connected to these IO terminals when the respective IO power supplies are turned off. The USB0_VBUS and USB1_VBUS are the only fail-safe IO terminals. All other IO terminals are not fail-safe and the voltage applied to them should be limited to the value defined by the **Steady State Max. Voltage at all IO pins** parameter in Table 3-1.

3.2 Recommended Operating Conditions

Device Operating Performance Points are defined in Table 3-2 through Table 3-9.

Table 3-2. VDD_CORE Operating Performance Points for ZCZ Package with Device Revision Code "Blank"[(1)]

VDD_CORE OPP Device Rev. "Blank"	VDD_CORE			DDR3, DDR3L[(2)]	DDR2[(2)]	mDDR[(2)]	L3 and L4
	MIN	NOM	MAX				
OPP100	1.056 V	1.100 V	1.144 V	400 MHz	266 MHz	200 MHz	200 MHz and 100 MHz
OPP50	0.912 V	0.950 V	0.988 V	-	125 MHz	90 MHz	100 MHz and 50 MHz

(1) Frequencies in this table indicate maximum performance for a given OPP condition.

(2) This parameter represents the maximum memory clock frequency. Since data is transferred on both edges of the clock, double-data rate (DDR), the maximum data rate is two times the maximum memory clock frequency defined in this table.

Table 3-3. VDD_MPU Operating Performance Points for ZCZ Package with Device Revision Code "Blank"[(1)]

VDD_MPU OPP Device Rev. "Blank"	VDD_MPU			ARM (A8)
	MIN	NOM	MAX	
Turbo	1.210 V	1.260 V	1.326 V	720 MHz
OPP120	1.152 V	1.200 V	1.248 V	600 MHz
OPP100[(2)]	1.056 V	1.100 V	1.144 V	500 MHz
OPP100[(3)]	1.056 V	1.100 V	1.144 V	275 MHz

(1) Frequencies in this table indicate maximum performance for a given OPP condition.

(2) Applies to all orderable AM335_ZCZ_50 (500-MHz speed grade) or higher devices.

(3) Applies to all orderable AM335_ZCZ_27 (275-MHz speed grade) devices.

Table 3-4. Valid Combinations of VDD_CORE and VDD_MPU Operating Performance Points for ZCZ Package with Device Revision Code "Blank"

VDD_CORE	VDD_MPU
OPP50	OPP100
OPP100	OPP100
OPP100	OPP120
OPP100	Turbo

Copyright © 2011–2013, Texas Instruments Incorporated

Table 3-5. VDD_CORE Operating Performance Points for ZCE Package with Device Revision Code "Blank"[(1)]

VDD_CORE OPP Device Rev. "Blank"	VDD_MPU[(2)]			ARM (A8)	DDR3, DDR3L[(3)]	DDR2[(3)]	mDDR[(3)]	L3 and L4
	MIN	NOM	MAX					
OPP100	1.056 V	1.100 V	1.144 V	500 MHz	400 MHz	266 MHz	200 MHz	200 MHz and 100 MHz
OPP100	1.056 V	1.100 V	1.144 V	275 MHz	400 MHz	266 MHz	200 MHz	200 MHz and 100 MHz

(1) Frequencies in this table indicate maximum performance for a given OPP condition.

(2) VDD_MPU is merged with VDD_CORE on the ZCE package.

(3) This parameter represents the maximum memory clock frequency. Since data is transferred on both edges of the clock, double-data rate (DDR), the maximum data rate is two times the maximum memory clock frequency defined in this table.

Table 3-6. VDD_CORE Operating Performance Points for ZCZ Package with Device Revision Code "A" or Newer[1]

VDD_CORE OPP Rev "A" or Newer	VDD_CORE			DDR3, DDR3L[2]	DDR2[2]	mDDR[2]	L3 and L4
	MIN	NOM	MAX				
OPP100	1.056 V	1.100 V	1.144 V	400 MHz	266 MHz	200 MHz	200 MHz and 100 MHz
OPP50	0.912 V	0.950 V	0.988 V	-	125 MHz	90 MHz	100 MHz and 50 MHz

(1) Frequencies in this table indicate maximum performance for a given OPP condition.

(2) This parameter represents the maximum memory clock frequency. Since data is transferred on both edges of the clock, double-data rate (DDR), the maximum data rate is two times the maximum memory clock frequency defined in this table.

Table 3-7. VDD_MPU Operating Performance Points for ZCZ Package with Device Revision Code "A" or Newer[1]

VDD_MPU OPP Rev "A" or Newer	VDD_MPU			ARM (A8)
	MIN	NOM	MAX	
Nitro	1.272 V	1.325 V	1.378 V	1 GHz
Turbo	1.210 V	1.260 V	1.326 V	800 MHz
OPP120	1.152 V	1.200 V	1.248 V	720 MHz
OPP100[2]	1.056 V	1.100 V	1.144 V	600 MHz
OPP100[3]	1.056 V	1.100 V	1.144 V	300 MHz
OPP50	0.912 V	0.950 V	0.988 V	300 MHz

(1) Frequencies in this table indicate maximum performance for a given OPP condition.

(2) Applies to all orderable AM335__ZCZ_60 (600 MHz speed grade) or higher devices.

(3) Applies to all orderable AM335__ZCZ_30 (300 MHz speed grade) devices.

Table 3-8. Valid Combinations of VDD_CORE and VDD_MPU Operating Performance Points for ZCZ Package with Device Revision Code "A" or Newer

VDD_CORE	VDD_MPU
OPP50	OPP50
OPP50	OPP100
OPP100	OPP50
OPP100	OPP100
OPP100	OPP120
OPP100	Turbo
OPP100	Nitro

Copyright © 2011–2013, Texas Instruments Incorporated

Table 3-9. VDD_CORE Operating Performance Points for ZCE Package with Device Revision Code "A" or Newer[(1)]

VDD_CORE OPP Rev "A" or newer	VDD_MPU[(2)]			ARM (A8)	DDR3, DDR3L[(3)]	DDR2[(3)]	mDDR[(3)]	L3 and L4
	MIN	NOM	MAX					
OPP100	1.056 V	1.100 V	1.144 V	600 MHz	400 MHz	266 MHz	200 MHz	200 MHz and 100 MHz
OPP100	1.056 V	1.100 V	1.144 V	300 MHz	400 MHz	266 MHz	200 MHz	200 MHz and 100 MHz
OPP50	0.912 V	0.950 V	0.988 V	300 MHz	-	125 MHz	90 MHz	100 MHz and 50 MHz

(1) Frequencies in this table indicate maximum performance for a given OPP condition.

(2) VDD_MPU is merged with VDD_CORE on the ZCE package.

(3) This parameter represents the maximum memory clock frequency. Since data is transferred on both edges of the clock, double-data rate (DDR), the maximum data rate is two times the maximum memory clock frequency defined in this table.

Table 3-10 summarizes the power consumption at the AM335x power terminals.

Table 3-10. Maximum Current Ratings at AM335x Power Terminals[1]

PARAMETER			MAX	UNIT
SUPPLY NAME	DESCRIPTION			
VDD_CORE[2]	Maximum current rating for the core domain; OPP100		400	mA
	Maximum current rating for the core domain; OPP50		250	mA
VDD_MPU[2]	Maximum current rating for the MPU domain; Nitro	at 1 GHz	1000	mA
	Maximum current rating for the MPU domain; Turbo	at 800 MHz	800	mA
		at 720 MHz	720	
	Maximum current rating for the MPU domain; OPP120	at 720 MHz	720	mA
		at 600 MHz	600	
	Maximum current rating for the MPU domain; OPP100	at 600 MHz	600	mA
		at 500 MHz	500	
		at 300 MHz	380	mA
		at 275 MHz	350	
	Maximum current rating for the MPU domain; OPP50	at 300 MHz	330	mA
		at 275 MHz	300	
CAP_VDD_RTC[3]	Maximum current rating for RTC domain input and LDO output		2	mA
VDDS_RTC	Maximum current rating for the RTC domain		5	mA
VDDS_DDR	Maximum current rating for DDR IO domain		250	mA
VDDS	Maximum current rating for all dual-voltage IO domains		50	mA
VDDS_SRAM_CORE_BG	Maximum current rating for core SRAM LDOs		10	mA
VDDS_SRAM_MPU_BB	Maximum current rating for MPU SRAM LDOs		10	mA
VDDS_PLL_DDR	Maximum current rating for the DPLL DDR		10	mA
VDDS_PLL_CORE_LCD	Maximum current rating for the DPLL Core and LCD		20	mA
VDDS_PLL_MPU	Maximum current rating for the DPLL MPU		10	mA
VDDS_OSC	Maximum current rating for the system oscillator IOs		5	mA
VDDA1P8V_USB0	Maximum current rating for USBPHY 1.8 V		25	mA
VDDA1P8V_USB1[4]	Maximum current rating for USBPHY 1.8 V		25	mA
VDDA3P3V_USB0	Maximum current rating for USBPHY 3.3 V		40	mA
VDDA3P3V_USB1[4]	Maximum current rating for USBPHY 3.3 V		40	mA
VDDA_ADC	Maximum current rating for ADC		10	mA
VDDSHV1[5]	Maximum current rating for dual-voltage IO domain		50	mA
VDDSHV2[4]	Maximum current rating for dual-voltage IO domain		50	mA
VDDSHV3[4]	Maximum current rating for dual-voltage IO domain		50	mA
VDDSHV4	Maximum current rating for dual-voltage IO domain		50	mA
VDDSHV5	Maximum current rating for dual-voltage IO domain		50	mA
VDDSHV6	Maximum current rating for dual-voltage IO domain		100	mA

(1) Current ratings specified in this table are worst-case estimates. Actual application power supply estimates could be lower. For more information, see the *AM335x Power Consumption Summary* application report (literature number SPRABN5).

(2) VDD_MPU is merged with VDD_CORE and is not available separately on the ZCE package. The maximum current rating for VDD_CORE on the ZCE package is the sum of VDD_CORE and VDD_MPU shown in this table.

(3) This supply is sourced from an internal LDO when RTC_KALDO_ENn is low. If RTC_KALDO_ENn is high, this supply must be sourced from an external power supply.

(4) Not available on the ZCE package.

(5) VDDSHV1 and VDDSHV2 are merged in the ZCE package. The maximum current rating for VDDSHV1 on the ZCE package is the sum of VDDSHV1 and VDDSHV2 shown in this table.

Copyright © 2011–2013, Texas Instruments Incorporated

The power-on hours (POH) information in Table 3-11 is provided solely for your convenience and does not extend or modify the warranty provided under TI's standard terms and conditions for TI semiconductor products.

To avoid significant degradation, the device power-on hours (POH) must be limited to the following:

Table 3-11. Reliability Data

OPERATING CONDITION	COMMERCIAL		INDUSTRIAL		EXTENDED	
	JUNCTION TEMP (T_j)	LIFETIME (POH)[1]	JUNCTION TEMP (T_j)	LIFETIME (POH)[1]	JUNCTION TEMP (T_j)	LIFETIME (POH)[1]
Nitro	0°C to 90°C	100K	-40°C to 90°C	100K	-40°C to 105°C	37K
Turbo	0°C to 90°C	100K	-40°C to 90°C	100K	-40°C to 105°C	80K
OPP120	0°C to 90°C	100K	-40°C to 90°C	100K	-40°C to 105°C	100K
OPP100	0°C to 90°C	100K	-40°C to 90°C	100K	-40°C to 105°C	100K
OPP50	0°C to 90°C	100K	-40°C to 90°C	100K	-40°C to 105°C	100K

(1) POH = Power-on hours when the device is fully functional.

NOTE

Logic functions and parameter values are not assured out of the range specified in the recommended operating conditions.

The above notations cannot be deemed a warranty or deemed to extend or modify the warranty under TI's standard terms and conditions for TI semiconductor products.

The device is used under the recommended operating conditions described in Table 3-12.

Table 3-12. Recommended Operating Conditions

PARAMETER		MIN	NOM	MAX	UNIT
SUPPLY NAME	DESCRIPTION				
VDD_CORE[1]	Supply voltage range for core domain; OPP100	1.056	1.100	1.144	V
	Supply voltage range for core domain; OPP50	0.912	0.950	0.988	
VDD_MPU[1][2]	Supply voltage range for MPU domain, Nitro	1.272	1.325	1.378	V
	Supply voltage range for MPU domain; Turbo	1.210	1.260	1.326	
	Supply voltage range for MPU domain; OPP120	1.152	1.200	1.248	
	Supply voltage range for MPU domain; OPP100	1.056	1.100	1.144	
	Supply voltage range for MPU domain; OPP50	0.912	0.950	0.988	
CAP_VDD_RTC[3]	Supply voltage range for RTC domain input	0.900	1.100	1.250	V
VDDS_RTC	Supply voltage range for RTC domain	1.710	1.800	1.890	V
VDDS_DDR	Supply voltage range for DDR IO domain (DDR2)	1.710	1.800	1.890	V
	Supply voltage range for DDR IO domain (DDR3)	1.425	1.500	1.575	
	Supply voltage range for DDR IO domain (DDR3L)	1.283	1.350	1.418	
VDDS[4]	Supply voltage range for all dual-voltage IO domains	1.710	1.800	1.890	V
VDDS_SRAM_CORE_BG	Supply voltage range for Core SRAM LDOs, Analog	1.710	1.800	1.890	V

Copyright © 2011–2013, Texas Instruments Incorporated

Table 3-12. Recommended Operating Conditions (continued)

PARAMETER		MIN	NOM	MAX	UNIT
SUPPLY NAME	DESCRIPTION				
VDDS_SRAM_MPU_BB	Supply voltage range for MPU SRAM LDOs, Analog	1.710	1.800	1.890	V
VDDS_PLL_DDR[5]	Supply voltage range for DPLL DDR, Analog	1.710	1.800	1.890	V
VDDS_PLL_CORE_LCD[5]	Supply voltage range for DPLL CORE and LCD, Analog	1.710	1.800	1.890	V
VDDS_PLL_MPU[5]	Supply voltage range for DPLL MPU, Analog	1.710	1.800	1.890	V
VDDS_OSC	Supply voltage range for system oscillator IO's, Analog	1.710	1.800	1.890	V
VDDA1P8V_USB0[5]	Supply voltage range for USBPHY and PER DPLL, Analog, 1.8V	1.710	1.800	1.890	V
VDDA1P8V_USB1[6]	Supply voltage range for USB PHY, Analog, 1.8V	1.710	1.800	1.890	V
VDDA3P3V_USB0	Supply voltage range for USB PHY, Analog, 3.3V	3.135	3.300	3.465	V
VDDA3P3V_USB1[6]	Supply voltage range for USB PHY, Analog, 3.3V	3.135	3.300	3.465	V
VDDA_ADC	Supply voltage range for ADC, Analog	1.710	1.800	1.890	V
VDDSHV1	Supply voltage range for dual-voltage IO domain (1.8-V operation)	1.710	1.800	1.890	V
VDDSHV2[6]	Supply voltage range for dual-voltage IO domain (1.8-V operation)	1.710	1.800	1.890	V
VDDSHV3[6]	Supply voltage range for dual-voltage IO domain (1.8-V operation)	1.710	1.800	1.890	V
VDDSHV4	Supply voltage range for dual-voltage IO domain (1.8-V operation)	1.710	1.800	1.890	V
VDDSHV5	Supply voltage range for dual-voltage IO domain (1.8-V operation)	1.710	1.800	1.890	V
VDDSHV6	Supply voltage range for dual-voltage IO domain (1.8-V operation)	1.710	1.800	1.890	V
VDDSHV1	Supply voltage range for dual-voltage IO domain (3.3-V operation)	3.135	3.300	3.465	V
VDDSHV2[6]	Supply voltage range for dual-voltage IO domain (3.3-V operation)	3.135	3.300	3.465	V
VDDSHV3[6]	Supply voltage range for dual-voltage IO domain (3.3-V operation)	3.135	3.300	3.465	V
VDDSHV4	Supply voltage range for dual-voltage IO domain (3.3-V operation)	3.135	3.300	3.465	V
VDDSHV5	Supply voltage range for dual-voltage IO domain (3.3-V operation)	3.135	3.300	3.465	V
VDDSHV6	Supply voltage range for dual-voltage IO domain (3.3-V operation)	3.135	3.300	3.465	V

Copyright © 2011–2013, Texas Instruments Incorporated

Table 3-12. Recommended Operating Conditions (continued)

PARAMETER		MIN	NOM	MAX	UNIT
SUPPLY NAME	DESCRIPTION				
DDR_VREF	Voltage range for DDR SSTL and HSTL reference input (DDR2, DDR3, DDR3L)	0.49*VDDS_DDR	0.50*VDDS_DDR	0.51*VDDS_DDR	V
USB0_VBUS	Voltage range for USB VBUS comparator input	0.000	5.000	5.250	V
USB1_VBUS(6)	Voltage range for USB VBUS comparator input	0.000	5.000	5.250	V
USB0_ID	Voltage range for the USB ID input		(7)		V
USB1_ID(6)	Voltage range for the USB ID input		(7)		V
Operating Temperature Range, T_j	Commercial Temperature	0		90	°C
	Industrial Temperature	-40		90	
	Extended Temperature	-40		105	

(1) The supply voltage defined by OPP100 should be applied to this power domain before the device is released from reset.

(2) Not available on the ZCE package. VDD_MPU is merged with VDD_CORE on the ZCE package.

(3) This supply is sourced from an internal LDO when RTC_KALDO_ENn is low. If RTC_KALDO_ENn is high, this supply must be sourced from an external power supply.

(4) VDDS should be supplied irrespective of 1.8-V or 3.3-V mode of operation of the dual-voltage IOs.

(5) For more details on power supply requirements, see Section 4.1.4.

(6) Not available on the ZCE package.

(7) This terminal is connected to analog circuits in the respective USB PHY. The circuit sources a known current while measuring the voltage to determine if the terminal is connected to VSSA_USB with a resistance less than 10 Ω or greater than 100 kΩ. The terminal should be connected to ground for USB host operation or open-circuit for USB peripheral operation, and should never be connected to any external voltage source.

Copyright © 2011–2013, Texas Instruments Incorporated

3.3 DC Electrical Characteristics

Table 3-13 summarizes the dc electrical characteristics.

Note: The interfaces or signals described in Table 3-13 correspond to the interfaces or signals available in multiplexing mode 0. All interfaces or signals multiplexed on the terminals described in Table 3-13 have the same dc electrical characteristics.

Table 3-13. DC Electrical Characteristics Over Recommended Ranges of Supply Voltage and Operating Temperature (Unless Otherwise Noted)

PARAMETER			MIN	NOM	MAX	UNIT
DDR_RESETn,DDR_CSn0,DDR_CKE,DDR_CK,DDR_CKn,DDR_CASn,DDR_RASn,DDR_WEn,DDR_BA0,DDR_BA1,DDR_BA2,DDR_A0,DDR_A1,DDR_A2,DDR_A3,DDR_A4,DDR_A5,DDR_A6,DDR_A7,DDR_A8,DDR_A9,DDR_A10,DDR_A11,DDR_A12,DDR_A13,DDR_A14,DDR_A15,DDR_ODT,DDR_D0,DDR_D1,DDR_D2,DDR_D3,DDR_D4,DDR_D5,DDR_D6,DDR_D7,DDR_D8,DDR_D9,DDR_D10,DDR_D11,DDR_D12,DDR_D13,DDR_D14,DDR_D15,DDR_DQM0,DDR_DQM1,DDR_DQS0,DDR_DQSn0,DDR_DQS1,DDR_DQSn1 pins (mDDR - LVCMOS mode)						
V_{IH}	High-level input voltage		0.65 * VDDS_DDR			V
V_{IL}	Low-level input voltage				0.35 * VDDS_DDR	V
V_{HYS}	Hysteresis voltage at an input		0.07		0.25	V
V_{OH}	High level output voltage, driver enabled, pullup or pulldown disbaled	I_{OH} = 8 mA	VDDS_DDR - 0.4			V
V_{OL}	Low level output voltage, driver enabled, pullup or pulldown disbaled	I_{OL} = 8 mA			0.4	V
I_I	Input leakage current, Receiver disabled, pullup or pulldown inhibited				10	µA
	Input leakage current, Receiver disabled, pullup enabled		-240		-80	
	Input leakage current, Receiver disabled, pulldown enabled		80		240	
I_{OZ}	Total leakage current through the terminal connection of a driver-receiver combination that may include a pullup or pulldown. The driver output is disabled and the pullup or pulldown is inhibited.				10	µA
DDR_RESETn,DDR_CSn0,DDR_CKE,DDR_CK,DDR_CKn,DDR_CASn,DDR_RASn,DDR_WEn,DDR_BA0,DDR_BA1,DDR_BA2,DDR_A0,DDR_A1,DDR_A2,DDR_A3,DDR_A4,DDR_A5,DDR_A6,DDR_A7,DDR_A8,DDR_A9,DDR_A10,DDR_A11,DDR_A12,DDR_A13,DDR_A14,DDR_A15,DDR_ODT,DDR_D0,DDR_D1,DDR_D2,DDR_D3,DDR_D4,DDR_D5,DDR_D6,DDR_D7,DDR_D8,DDR_D9,DDR_D10,DDR_D11,DDR_D12,DDR_D13,DDR_D14,DDR_D15,DDR_DQM0,DDR_DQM1,DDR_DQS0,DDR_DQSn0,DDR_DQS1,DDR_DQSn1 pins (DDR2 - SSTL mode)						
V_{IH}	High-level input voltage		DDR_VREF + 0.125			V
V_{IL}	Low-level input voltage				DDR_VREF - 0.125	V
V_{HYS}	Hysteresis voltage at an input			NA		V
V_{OH}	High-level output voltage, driver enabled, pullup or pulldown disbaled	I_{OH} = 8 mA	VDDS_DDR - 0.4			V
V_{OL}	Low-level output voltage, driver enabled, pullup or pulldown disbaled	I_{OL} = 8 mA			0.4	V
I_I	Input leakage current, Receiver disabled, pullup or pulldown inhibited				10	µA
	Input leakage current, Receiver disabled, pullup enabled		-240		-80	
	Input leakage current, Receiver disabled, pulldown enabled		80		240	
I_{OZ}	Total leakage current through the terminal connection of a driver-receiver combination that may include a pullup or pulldown. The driver output is disabled and the pullup or pulldown is inhibited.				10	µA

Copyright © 2011–2013, Texas Instruments Incorporated

Table 3-13. DC Electrical Characteristics Over Recommended Ranges of Supply Voltage and Operating Temperature (Unless Otherwise Noted) (continued)

PARAMETER			MIN	NOM	MAX	UNIT
DDR_RESETn,DDR_CSn0,DDR_CKE,DDR_CK,DDR_CKn,DDR_CASn,DDR_RASn,DDR_WEn,DDR_BA0,DDR_BA1,DDR_BA2,DDR_A0,DDR_A1,DDR_A2,DDR_A3,DDR_A4,DDR_A5,DDR_A6,DDR_A7,DDR_A8,DDR_A9,DDR_A10,DDR_A11,DDR_A12,DDR_A13,DDR_A14,DDR_A15,DDR_ODT,DDR_D0,DDR_D1,DDR_D2,DDR_D3,DDR_D4,DDR_D5,DDR_D6,DDR_D7,DDR_D8,DDR_D9,DDR_D10,DDR_D11,DDR_D12,DDR_D13,DDR_D14,DDR_D15,DDR_DQM0,DDR_DQM1,DDR_DQS0,DDR_DQSn0,DDR_DQS1,DDR_DQSn1 pins (DDR3, DDR3L - HSTL mode)						
V_{IH}	High-level input voltage	VDDS_DDR = 1.5 V	DDR_VREF + 0.1			V
		VDDS_DDR = 1.35 V	DDR_VREF + 0.09			
V_{IL}	Low-level input voltage	VDDS_DDR = 1.5 V			DDR_VREF - 0.1	V
		VDDS_DDR = 1.35 V			DDR_VREF - 0.09	
V_{HYS}	Hysteresis voltage at an input			NA		V
V_{OH}	High-level output voltage, driver enabled, pullup or pulldown disbaled	I_{OH} = 8 mA	VDDS_DDR - 0.4			V
V_{OL}	Low-level output voltage, driver enabled, pullup or pulldown disbaled	I_{OL} = 8 mA			0.4	V
I_I	Input leakage current, Receiver disabled, pullup or pulldown inhibited				10	µA
	Input leakage current, Receiver disabled, pullup enabled		-240		-80	
	Input leakage current, Receiver disabled, pulldown enabled		80		240	
I_{OZ}	Total leakage current through the terminal connection of a driver-receiver combination that may include a pullup or pulldown. The driver output is disabled and the pullup or pulldown is inhibited.				10	µA
ECAP0_IN_PWM0_OUT,UART0_CTSn,UART0_RTSn,UART0_RXD,UART0_TXD,UART1_CTSn,UART1_RTSn,UART1_RXD,UART1_TXD,I2C0_SDA,I2C0_SCL,XDMA_EVENT_INTR0,XDMA_EVENT_INTR1,WARMRSTn,PWRONRSTn,EXTINTn,TMS,TDO,USB0_DRVVBUS,USB1_DRVVBUS (VDDSHV6 = 1.8 V)						
V_{IH}	High-level input voltage		0.65 * VDDSHV6			V
V_{IL}	Low-level input voltage				0.35 * VDDSHV6	V
V_{HYS}	Hysteresis voltage at an input		0.18		0.305	V
V_{OH}	High-level output voltage, driver enabled, pullup or pulldown disbaled	I_{OH} = 4 mA	VDDSHV6 - 0.45			V
V_{OL}	Low-level output voltage, driver enabled, pullup or pulldown disbaled	I_{OL} = 4 mA			0.45	V
I_I	Input leakage current, Receiver disabled, pullup or pulldown inhibited				8	µA
	Input leakage current, Receiver disabled, pullup enabled		-161	-100	-52	
	Input leakage current, Receiver disabled, pulldown enabled		52	100	170	
I_{OZ}	Total leakage current through the terminal connection of a driver-receiver combination that may include a pullup or pulldown. The driver output is disabled and the pullup or pulldown is inhibited.				8	µA

Table 3-13. DC Electrical Characteristics Over Recommended Ranges of Supply Voltage and Operating Temperature (Unless Otherwise Noted) (continued)

PARAMETER			MIN	NOM	MAX	UNIT
ECAP0_IN_PWM0_OUT,UART0_CTSn,UART0_RTSn,UART0_RXD,UART0_TXD,UART1_CTSn,UART1_RTSn,UART1_RXD,UART1_TXD,I2C0_SDA,I2C0_SCL,XDMA_EVENT_INTR0,XDMA_EVENT_INTR1,WARMRSTn,PWRONRSTn,EXTINTn,TMS,TDO,USB0_DRVVBUS,USB1_DRVVBUS (VDDSHV6 = 3.3 V)						
V_{IH}	High-level input voltage		2			V
V_{IL}	Low-level input voltage				0.8	V
V_{HYS}	Hysteresis voltage at an input		0.265		0.44	V
V_{OH}	High-level output voltage, driver enabled, pullup or pulldown disbaled	I_{OH} = 4 mA	VDDSHV6 - 0.45			V
V_{OL}	Low-level output voltage, driver enabled, pullup or pulldown disbaled	I_{OL} = 4 mA			0.45	V
I_I	Input leakage current, Receiver disabled, pullup or pulldown inhibited				18	µA
	Input leakage current, Receiver disabled, pullup enabled		-243	-100	-19	
	Input leakage current, Receiver disabled, pulldown enabled		51	110	210	
I_{OZ}	Total leakage current through the terminal connection of a driver-receiver combination that may include a pullup or pulldown. The driver output is disabled and the pullup or pulldown is inhibited.				18	µA
TCK (VDDSHV6 = 1.8 V)						
V_{IH}	High-level input voltage		1.45			V
V_{IL}	Low-level input voltage				0.46	V
V_{HYS}	Hysteresis voltage at an input		0.4			V
I_I	Input leakage current, Receiver disabled, pullup or pulldown inhibited				8	µA
	Input leakage current, Receiver disabled, pullup enabled		-161	-100	-52	
	Input leakage current, Receiver disabled, pulldown enabled		52	100	170	
TCK (VDDSHV6 = 3.3 V)						
V_{IH}	High-level input voltage		2.15			V
V_{IL}	Low-level input voltage				0.46	V
V_{HYS}	Hysteresis voltage at an input		0.4			V
I_I	Input leakage current, Receiver disabled, pullup or pulldown inhibited				18	µA
	Input leakage current, Receiver disabled, pullup enabled		-243	-100	-19	
	Input leakage current, Receiver disabled, pulldown enabled		51	110	210	
PWRONRSTn (VDDSHV6 = 1.8 V or 3.3 V)(1)						
V_{IH}	High-level input voltage		1.35			V
V_{IL}	Low-level input voltage				0.5	V
V_{HYS}	Hysteresis voltage at an input		0.07			V
I_I	Input leakage current	V_I = 1.8 V			0.1	µA
		V_I = 3.3 V			2	

(1) The input voltage thresholds for this input are not a function of VDDSHV6.

Copyright © 2011–2013, Texas Instruments Incorporated

Table 3-13. DC Electrical Characteristics Over Recommended Ranges of Supply Voltage and Operating Temperature (Unless Otherwise Noted) (continued)

PARAMETER			MIN	NOM	MAX	UNIT
All other LVCMOS pins (VDDSHVx = 1.8 V; x=1-6)						
V_{IH}	High-level input voltage		0.65 * VDDSHVx			V
V_{IL}	Low-level input voltage				0.35 * VDDSHVx	V
V_{HYS}	Hysteresis voltage at an input		0.18		0.305	V
V_{OH}	High-level output voltage, driver enabled, pullup or pulldown disbaled	I_{OH} = 6 mA	VDDSHVx - 0.45			V
V_{OL}	Low-level output voltage, driver enabled, pullup or pulldown disbaled	I_{OL} = 6 mA			0.45	V
I_I	Input leakage current, Receiver disabled, pullup or pulldown inhibited				8	µA
	Input leakage current, Receiver disabled, pullup enabled		-161	-100	-52	
	Input leakage current, Receiver disabled, pulldown enabled		52	100	170	
I_{OZ}	Total leakage current through the terminal connection of a driver-receiver combination that may include a pullup or pulldown. The driver output is disabled and the pullup or pulldown is inhibited.				8	µA
All other LVCMOS pins (VDDSHVx = 3.3 V; x=1-6)						
V_{IH}	High-level input voltage		2			V
V_{IL}	Low-level input voltage				0.8	V
V_{HYS}	Hysteresis voltage at an input		0.265		0.44	V
V_{OH}	High-level output voltage, driver enabled, pullup or pulldown disbaled	I_{OH} = 6 mA	VDDSHVx - 0.45			V
V_{OL}	Low-level output voltage, driver enabled, pullup or pulldown disbaled	I_{OL} = 6 mA			0.45	V
I_I	Input leakage current, Receiver disabled, pullup or pulldown inhibited				18	µA
	Input leakage current, Receiver disabled, pullup enabled		-243	-100	-19	
	Input leakage current, Receiver disabled, pulldown enabled		51	110	210	
I_{OZ}	Total leakage current through the terminal connection of a driver-receiver combination that may include a pullup or pulldown. The driver output is disabled and the pullup or pulldown is inhibited.				18	µA

Copyright © 2011–2013, Texas Instruments Incorporated

3.4 External Capacitors

To improve module performance, decoupling capacitors are required to suppress the switching noise generated by high frequency and to stabilize the supply voltage. A decoupling capacitor is most effective when it is close to the device, because this minimizes the inductance of the circuit board wiring and interconnects.

3.4.1 Voltage Decoupling Capacitors

Table 3-14 summarizes the Core voltage decoupling characteristics.

3.4.1.1 Core Voltage Decoupling Capacitors

To improve module performance, decoupling capacitors are required to suppress high-frequency switching noise and to stabilize the supply voltage. A decoupling capacitor is most effective when located close to the AM335x device, because this minimizes the inductance of the circuit board wiring and interconnects.

Table 3-14. Core Voltage Decoupling Characteristics

PARAMETER	TYP	UNIT
C_{VDD_CORE} (1)	10.08	µF
C_{VDD_MPU} (2)(3)	10.05	µF

(1) The typical value corresponds to 1 cap of 10 µF and 8 caps of 10 nF.
(2) Not available on the ZCE package. VDD_MPU is merged with VDD_CORE on the ZCE package.
(3) The typical value corresponds to 1 cap of 10 µF and 5 caps of 10 nF.

3.4.1.2 IO and Analog Voltage Decoupling Capacitors

Table 3-15 summarizes the power-supply decoupling capacitor recommendations.

Table 3-15. Power-Supply Decoupling Capacitor Characteristics

PARAMETER	TYP	UNIT
C_{VDDA_ADC}	10	nF
$C_{VDDA1P8V_USB0}$	10	nF
$C_{CVDDA3P3V_USB0}$	10	nF
$C_{VDDA1P8V_USB1}$ (1)	10	nF
$C_{VDDA3P3V_USB1}$ (1)	10	nF
C_{VDDS} (2)	10.04	µF
C_{VDDS_DDR}	(4)	
C_{VDDS_OSC}	10	nF
$C_{VDDS_PLL_DDR}$	10	nF
$C_{VDDS_PLL_CORE_LCD}$	10	nF
$C_{VDDS_SRAM_CORE_BG}$	10	nF
$C_{VDDS_SRAM_MPU_BB}$	10	nF
$C_{VDDS_PLL_MPU}$	10	nF
C_{VDDS_RTC}	10	nF
$C_{VDDSHV1}$ (5)	10.02	µF
$C_{VDDSHV2}$ (1)(5)	10.02	µF
$C_{VDDSHV3}$ (1)(5)	10.02	µF

Copyright © 2011–2013, Texas Instruments Incorporated

Table 3-15. Power-Supply Decoupling Capacitor Characteristics (continued)

PARAMETER	TYP	UNIT
$C_{VDDSHV4}$(5)	10.02	µF
$C_{VDDSHV5}$(5)	10.02	µF
$C_{VDDSHV6}$(3)	10.06	µF

(1) Not available on the ZCE package.

(2) Typical values consist of 1 cap of 10 µF and 4 caps of 10 nF.

(3) Typical values consist of 1 cap of 10 µF and 6 caps of 10 nF.

(4) For more details on decoupling capacitor requirements for the mDDR(LPDDR), DDR2, DDR3, DDR3L memory interface, see Section 5.6.2.1.2.6 and Section 5.6.2.1.2.7 when using mDDR(LPDDR) memory devices, Section 5.6.2.2.2.6 and Section 5.6.2.2.2.7 when using DDR2 memory devices, or Section 5.6.2.3.3.6 and Section 5.6.2.3.3.7 when using DDR3 or DDR3L memory devices.

(5) Typical values consist of 1 cap of 10 µF and 2 caps of 10 nF.

3.4.2 Output Capacitors

Internal low dropout output (LDO) regulators require external capacitors to stabilize their outputs. These capacitors should be placed as close as possible to the respective terminals of the AM335x device. Table 3-16 summarizes the LDO output capacitor recommendations.

Table 3-16. Output Capacitor Characteristics

PARAMETER	TYP	UNIT
$C_{CAP_VDD_SRAM_CORE}$(1)	1	µF
$C_{CAP_VDD_RTC}$(1)(2)	1	µF
$C_{CAP_VDD_SRAM_MPU}$(1)	1	µF
$C_{CAP_VBB_MPU}$(1)	1	µF

(1) LDO regulator outputs should not be used as a power source for any external components.

(2) The CAP_VDD_RTC terminal operates as an input to the RTC core voltage domain when the RTC_KLDO_ENn terminal is high.

Figure 3-1 illustrates an example of the external capacitors.

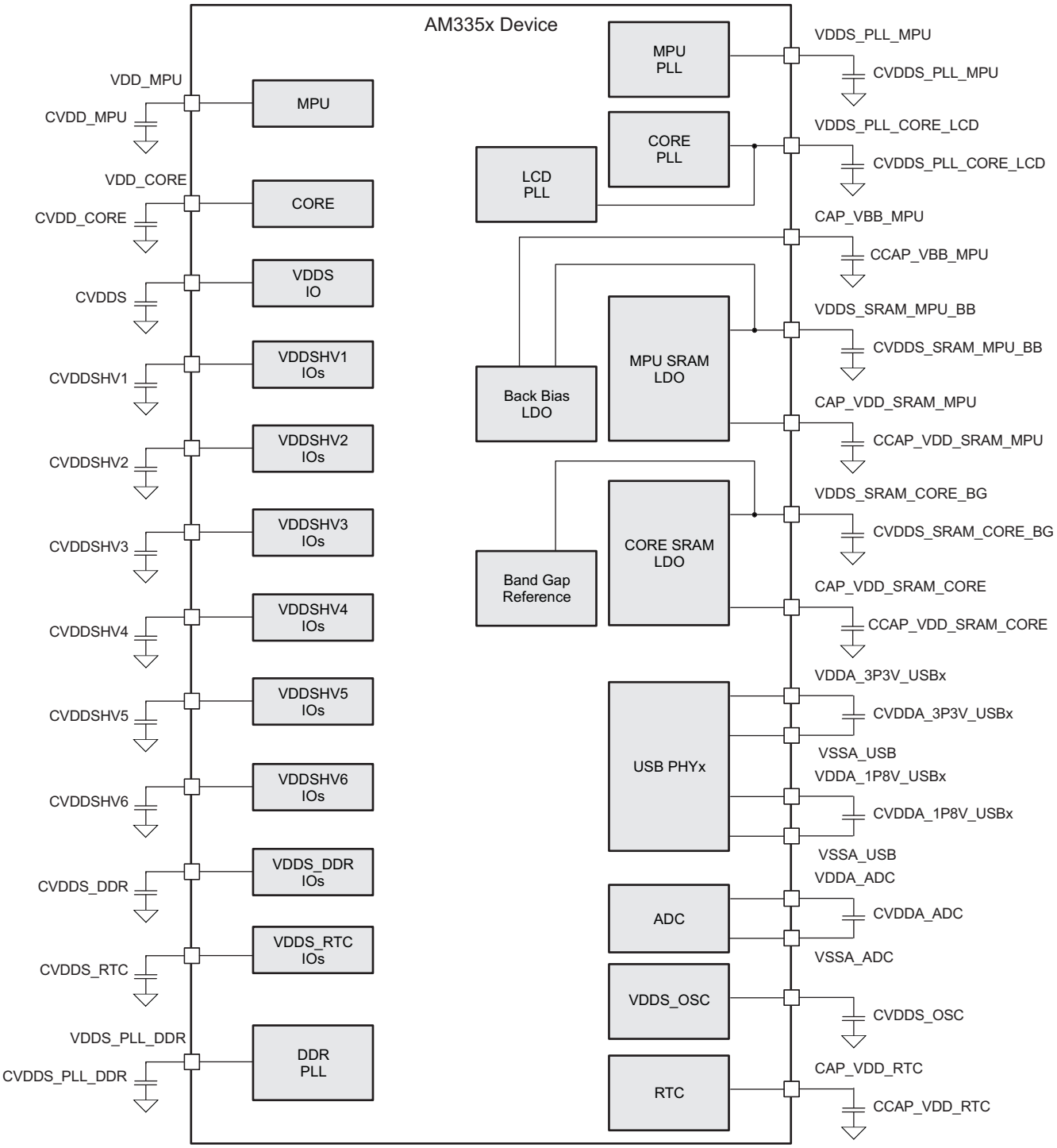

A. Decoupling capacitors must be placed as closed as possible to the power terminal. Choose the ground located closest to the power pin for each decoupling capacitor. In case of interconnecting powers, first insert the decoupling capacitor and then interconnect the powers.

B. The decoupling capacitor value depends on the board characteristics.

Figure 3-1. External Capacitors

Copyright © 2011–2013, Texas Instruments Incorporated

3.5 Touchscreen Controller and Analog-to-Digital Subsystem Electrical Parameters

The touchscreen controller (TSC) and analog-to-digital converter (ADC) subsystem (TSC_ADC) is an 8-channel general-purpose ADC with optional support for interleaving TSC conversions for 4-wire, 5-wire, or 8-wire resistive panels. The TSC_ADC subsystem can be configured for use in one of the following applications:

- 8 general-purpose ADC channels
- 4-wire TSC with 4 general-purpose ADC channels
- 5-wire TSC with 3 general-purpose ADC channels
- 8-wire TSC.

Table 3-17 summarizes the TSC_ADC subsystem electrical parameters.

Table 3-17. TSC_ADC Electrical Parameters

PARAMETER	CONDITION	MIN	NOM	MAX	UNIT
Analog Input					
VREFP[(1)]		(0.5 * VDDA_ADC) + 0.25		VDDA_ADC	V
VREFN[(1)]		0		(0.5 * VDDA_ADC) - 0.25	V
VREFP + VREFN[(1)]			VDDA_ADC		V
Full-scale Input Range	Internal Voltage Reference	0		VDDA_ADC	V
	External Voltage Reference	VREFN		VREFP	
Differential Non-Linearity (DNL)	Internal Voltage Reference: VDDA_ADC = 1.8V External Voltage Reference: VREFP - VREFN = 1.8V	-1	0.5	1	LSB
Integral Non-Linearity (INL)	Source impedance = 50 Ω Internal Voltage Reference: VDDA_ADC = 1.8V External Voltage Reference: VREFP - VREFN = 1.8V	-2	±1	2	LSB
	Source Impedance = 1k Ω Internal Voltage Reference: VDDA_ADC = 1.8V External Voltage Reference: VREFP - VREFN = 1.8V		±1		LSB
Gain Error	Internal Voltage Reference: VDDA_ADC = 1.8V External Voltage Reference: VREFP - VREFN = 1.8V		±2		LSB
Offset Error	Internal Voltage Reference: VDDA_ADC = 1.8V External Voltage Reference: VREFP - VREFN = 1.8V		±2		LSB
Input Sampling Capacitance			5.5		pF
Signal-to-Noise Ratio (SNR)	Internal Voltage Reference: VDDA_ADC = 1.8V External Voltage Reference: VREFP - VREFN = 1.8V Input Signal: 30 kHz sine wave at -0.5 dB Full Scale		70		dB
Total Harmonic Distortion (THD)	Internal Voltage Reference: VDDA_ADC = 1.8V External Voltage Reference: VREFP - VREFN = 1.8V Input Signal: 30 kHz sine wave at -0.5 dB Full Scale		75		dB

Copyright © 2011–2013, Texas Instruments Incorporated

Table 3-17. TSC_ADC Electrical Parameters (continued)

PARAMETER	CONDITION	MIN	NOM	MAX	UNIT
Spurious Free Dynamic Range	Internal Voltage Reference: VDDA_ADC = 1.8V External Voltage Reference: VREFP - VREFN = 1.8V Input Signal: 30 kHz sine wave at -0.5 dB Full Scale		80		dB
Signal-to-Noise Plus Distortion	Internal Voltage Reference: VDDA_ADC = 1.8V External Voltage Reference: VREFP - VREFN = 1.8V Input Signal: 30 kHz sine wave at -0.5 dB Full Scale		69		dB
VREFP and VREFN Input Impedance			20		kΩ
Input Impedance of AIN[7:0][2]	f = input frequency		[1/((65.97 x 10^{-12}) x f)]		Ω
Sampling Dynamics					
Conversion Time			15		ADC Clock Cycles
Acquisition Time			2		ADC Clock Cycles
Sampling Rate	ADC Clock = 3 MHz		200		kSPS
Channel-to-Channel Isolation			100		dB
Touchscreen Switch Drivers					
Pull-Up and Pull-Down Switch ON Resistance (Ron)			2		Ω
Pull-Up and Pull-Down Switch Current Leakage Ileak	Source impedance = 500 Ω			0.5	uA
Drive Current				25	mA
Touchscreen Resistance				6	kΩ
Pen Touch Detect				2	kΩ

(1) VREFP and VREFN must be tied to ground if the internal voltage reference is used.

(2) This parameter is valid when the respective AIN terminal is configured to operate as a general-purpose ADC input.

Copyright © 2011–2013, Texas Instruments Incorporated

4 Power and Clocking

4.1 Power Supplies

4.1.1 Power-Up Sequencing

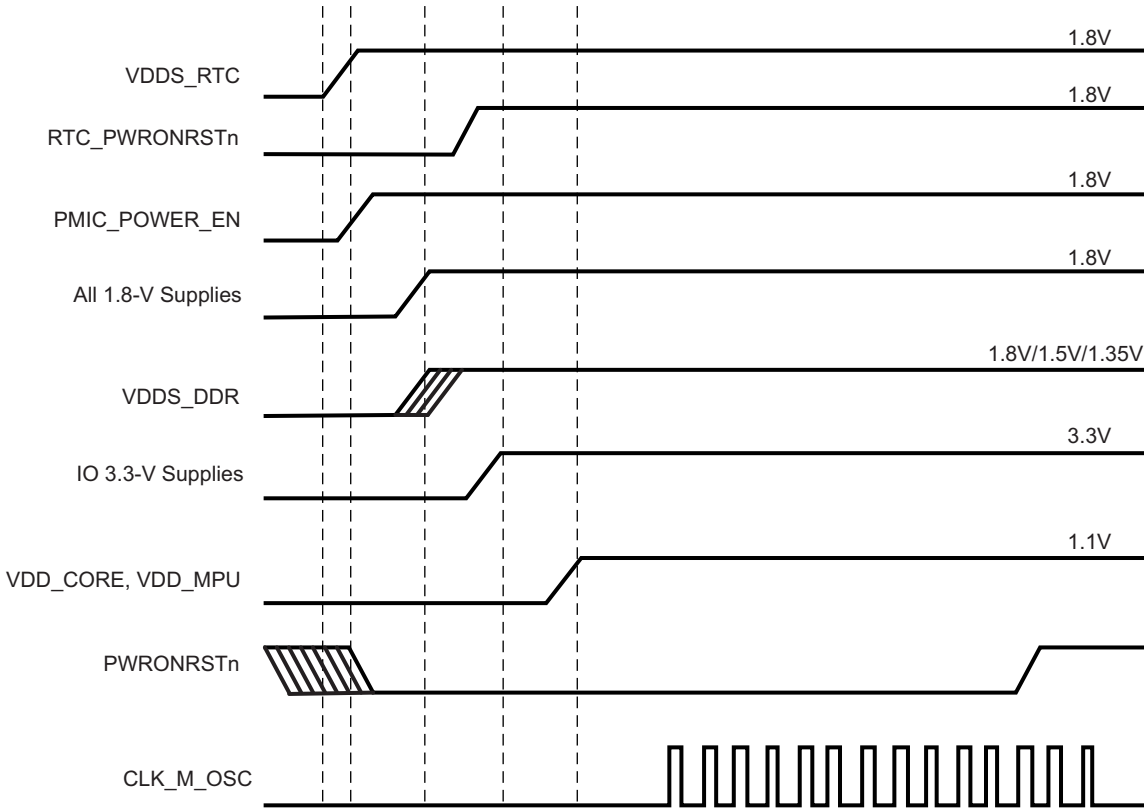

A. RTC_PWRONRSTn should be asserted for at least 1 ms to provide enough time for the internal RTC LDO output to reach a valid level before RTC reset is released.

B. When using the ZCZ package option, VDD_MPU and VDD_CORE power inputs may be powered from the same source if the application only uses operating performance points (OPPs) that define a common power supply voltage for VDD_MPU and VDD_CORE. The ZCE package option has the VDD_MPU domain merged with the VDD_CORE domain.

C. If a USB port is not used, the respective VDDA1P8V_USB terminal may be connected to any 1.8-V power supply and the respective VDDA3P3V_USB terminal may be connected to any 3.3-V power supply. If the system does not have a 3.3-V power supply, the VDDA3P3V_USB terminal may be connected to ground.

D. If the system uses mDDR or DDR2 memory devices, VDDS_DDR can be ramped simultaneously with the other 1.8-V IO power supplies.

E. VDDS_RTC can be ramped independent of other power supplies if PMIC_POWER_EN functionality is not required. If VDDS_RTC is ramped after VDD_CORE, there might be a small amount of additional leakage current on VDD_CORE. The power sequence shown provides the lowest leakage option.

F. To configure VDDSHVx [1-6] as 1.8 V, power up the respective VDDSHVx [1-6] to 1.8 V following the recommended sequence. To configure VDDSHVx [1-6] as 3.3 V, power up the respective VDDSHVx [1-6] to 3.3 V following the recommended sequence.

Figure 4-1. Preferred Power-Supply Sequencing with Dual-Voltage IOs Configured as 3.3 V

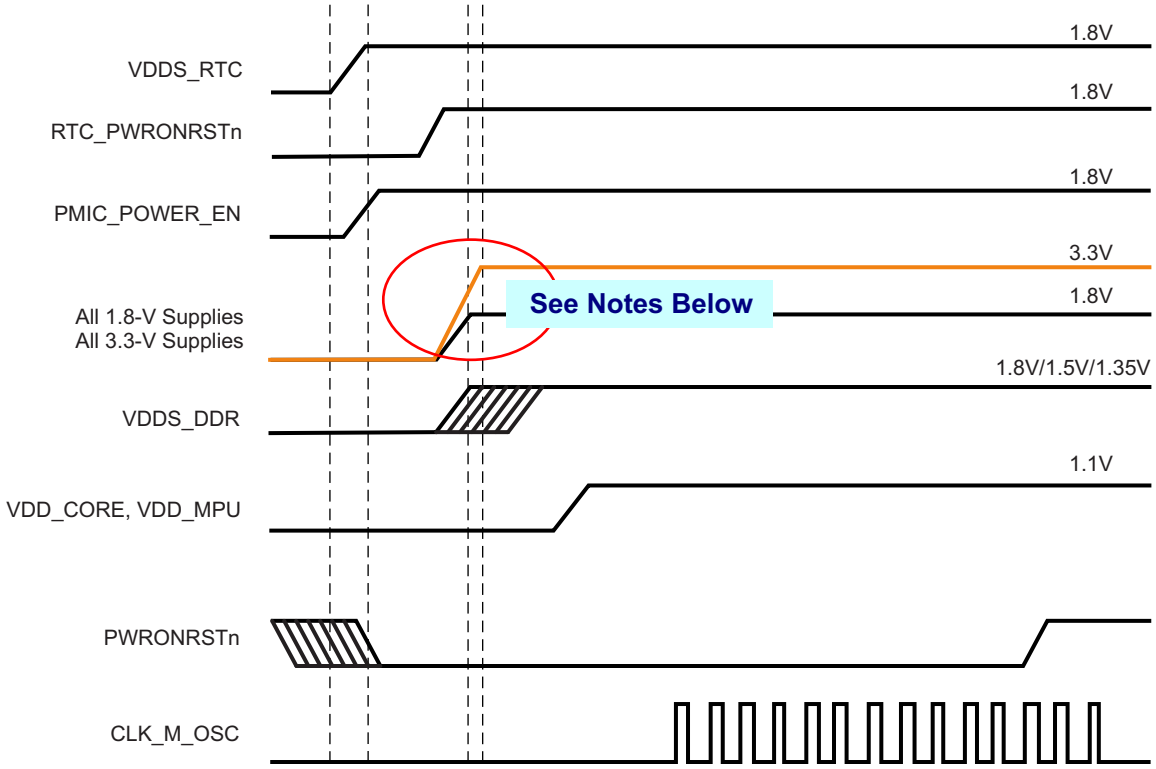

A. RTC_PWRONRSTn should be asserted for at least 1 ms to provide enough time for the internal RTC LDO output to reach a valid level before RTC reset is released.

B. The 3.3-V IO power supplies may be ramped simultaneously with the 1.8-V IO power supplies if the voltage sourced by any 3.3-V power supplies does not exceed the voltage sourced by any 1.8-V power supply by more than 2 V. Serious reliability issues may occur if the system power supply design allows any 3.3-V IO power supplies to exceed any 1.8-V IO power supplies by more than 2 V.

C. When using the ZCZ package option, VDD_MPU and VDD_CORE power inputs may be powered from the same source if the application only uses operating performance points (OPPs) that define a common power supply voltage for VDD_MPU and VDD_CORE. The ZCE package option has the VDD_MPU domain merged with the VDD_CORE domain.

D. If a USB port is not used, the respective VDDA1P8V_USB terminal may be connected to any 1.8-V power supply and the respective VDDA3P3V_USB terminal may be connected to any 3.3-V power supply. If the system does not have a 3.3-V power supply, the VDDA3P3V_USB terminal may be connected to ground.

E. If the system uses mDDR or DDR2 memory devices, VDDS_DDR can be ramped simultaneously with the other 1.8-V IO power supplies.

F. VDDS_RTC can be ramped independent of other power supplies if PMIC_POWER_EN functionality is not required. If VDDS_RTC is ramped after VDD_CORE, there might be a small amount of additional leakage current on VDD_CORE. The power sequence shown provides the lowest leakage option.

G. To configure VDDSHVx [1-6] as 1.8 V, power up the respective VDDSHVx [1-6] to 1.8 V following the recommended sequence. To configure VDDSHVx [1-6] as 3.3 V, power up the respective VDDSHVx [1-6] to 3.3 V following the recommended sequence.

Figure 4-2. Alternate Power-Supply Sequencing with Dual-Voltage IOs Configured as 3.3 V

Copyright © 2011–2013, Texas Instruments Incorporated

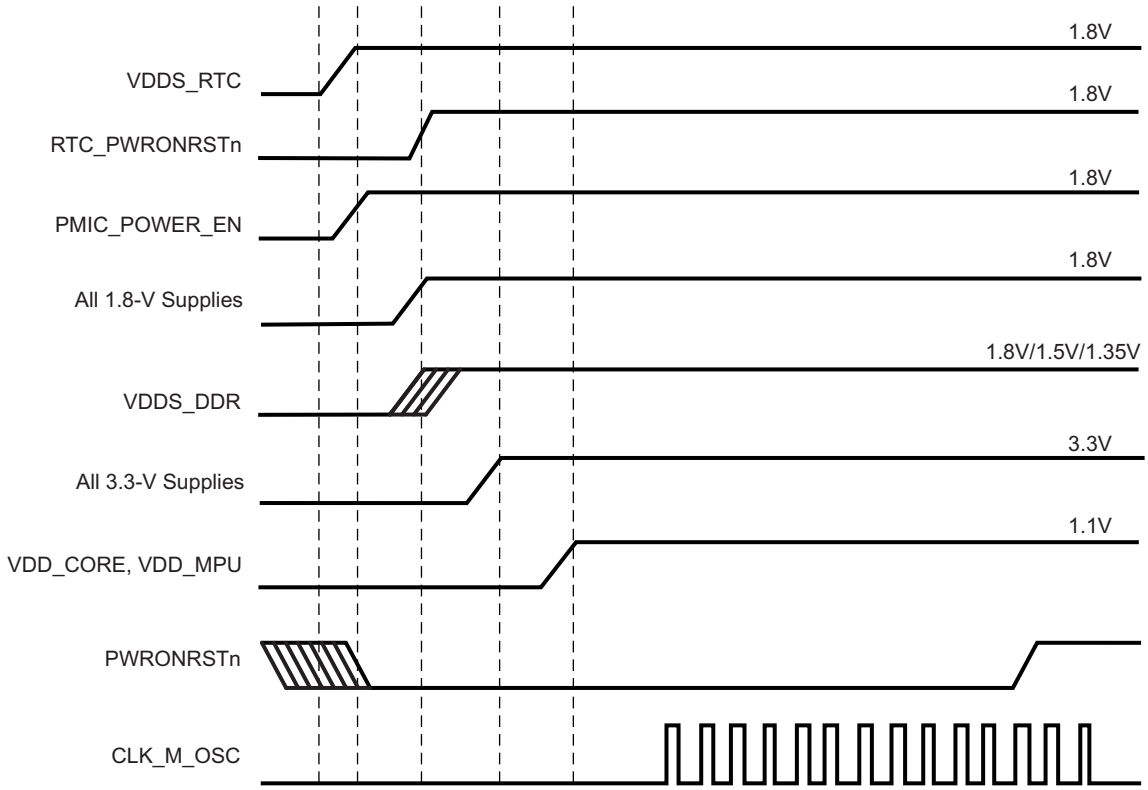

A. RTC_PWRONRSTn should be asserted for at least 1 ms to provide enough time for the internal RTC LDO output to reach a valid level before RTC reset is released.

B. When using the ZCZ package option, VDD_MPU and VDD_CORE power inputs may be powered from the same source if the application only uses operating performance points (OPPs) that define a common power supply voltage for VDD_MPU and VDD_CORE. The ZCE package option has the VDD_MPU domain merged with the VDD_CORE domain.

C. If a USB port is not used, the respective VDDA1P8V_USB terminal may be connected to any 1.8-V power supply and the respective VDDA3P3V_USB terminal may be connected to any 3.3-V power supply. If the system does not have a 3.3-V power supply, the VDDA3P3V_USB terminal may be connected to ground.

D. If the system uses mDDR or DDR2 memory devices, VDDS_DDR can be ramped simultaneously with the other 1.8-V IO power supplies.

E. VDDS_RTC can be ramped independent of other power supplies if PMIC_POWER_EN functionality is not required. If VDDS_RTC is ramped after VDD_CORE, there might be a small amount of additional leakage current on VDD_CORE. The power sequence shown provides the lowest leakage option.

F. To configure VDDSHVx [1-6] as 1.8 V, power up the respective VDDSHVx [1-6] to 1.8 V following the recommended sequence. To configure VDDSHVx [1-6] as 3.3 V, power up the respective VDDSHVx [1-6] to 3.3 V following the recommended sequence.

Figure 4-3. Power-Supply Sequencing with Dual-Voltage IOs Configured as 1.8 V

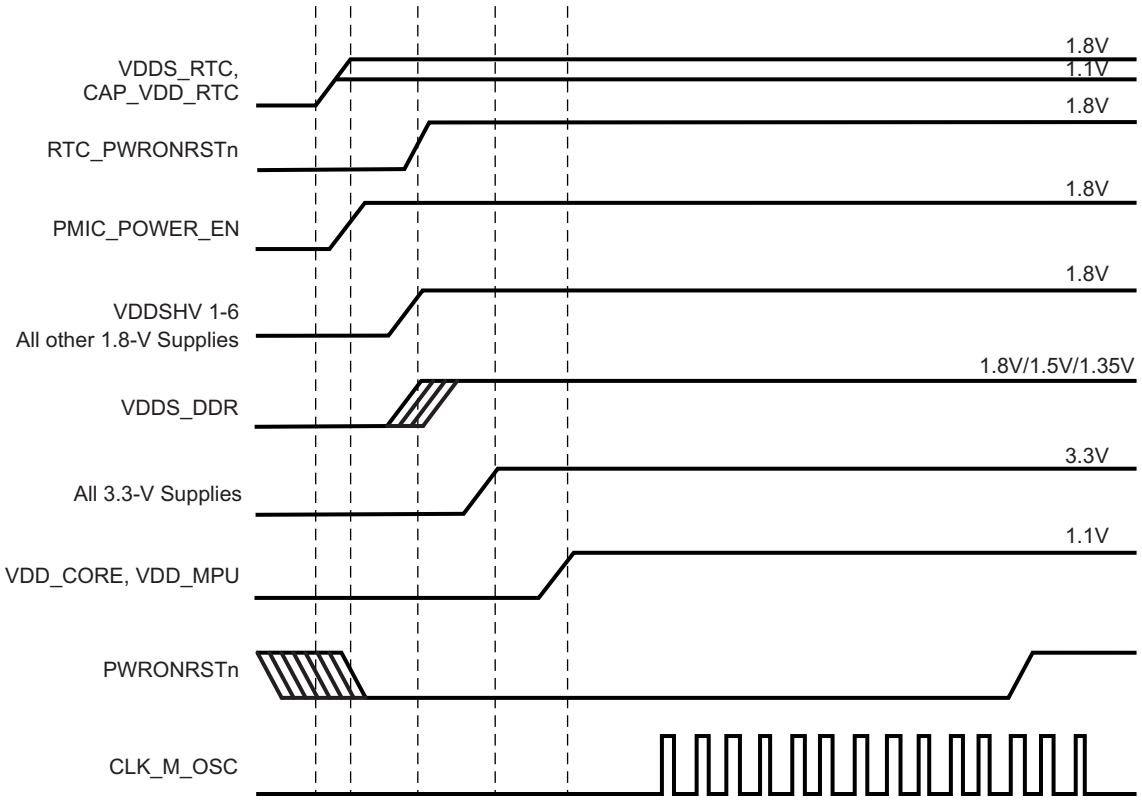

A. RTC_PWRONRSTn should be asserted for at least 1 ms to provide enough time for the internal RTC LDO output to reach a valid level before RTC reset is released.

B. The CAP_VDD_RTC terminal operates as an input to the RTC core voltage domain when the internal RTC LDO is disabled by connecting the RTC_KALDO_ENn terminal to VDDS_RTC. If the internal RTC LDO is disabled, CAP_VDD_RTC should be sourced from an external 1.1-V power supply.

C. When using the ZCZ package option, VDD_MPU and VDD_CORE power inputs may be powered from the same source if the application only uses operating performance points (OPPs) that define a common power supply voltage for VDD_MPU and VDD_CORE. The ZCE package option has the VDD_MPU domain merged with the VDD_CORE domain.

D. If a USB port is not used, the respective VDDA1P8V_USB terminal may be connected to any 1.8-V power supply and the respective VDDA3P3V_USB terminal may be connected to any 3.3-V power supply. If the system does not have a 3.3-V power supply, the VDDA3P3V_USB terminal may be connected to ground.

E. If the system uses mDDR or DDR2 memory devices, VDDS_DDR can be ramped simultaneously with the other 1.8-V IO power supplies.

F. VDDS_RTC should be ramped at the same time or before CAP_VDD_RTC, but these power inputs can be ramped independent of other power supplies if PMIC_POWER_EN functionality is not required. If CAP_VDD_RTC is ramped after VDD_CORE, there might be a small amount of additional leakage current on VDD_CORE. The power sequence shown provides the lowest leakage option.

G. To configure VDDSHVx [1-6] as 1.8 V, power up the respective VDDSHVx [1-6] to 1.8 V following the recommended sequence. To configure VDDSHVx [1-6] as 3.3 V, power up the respective VDDSHVx [1-6] to 3.3 V following the recommended sequence.

Figure 4-4. Power-Supply Sequencing with Internal RTC LDO Disabled

Copyright © 2011–2013, Texas Instruments Incorporated

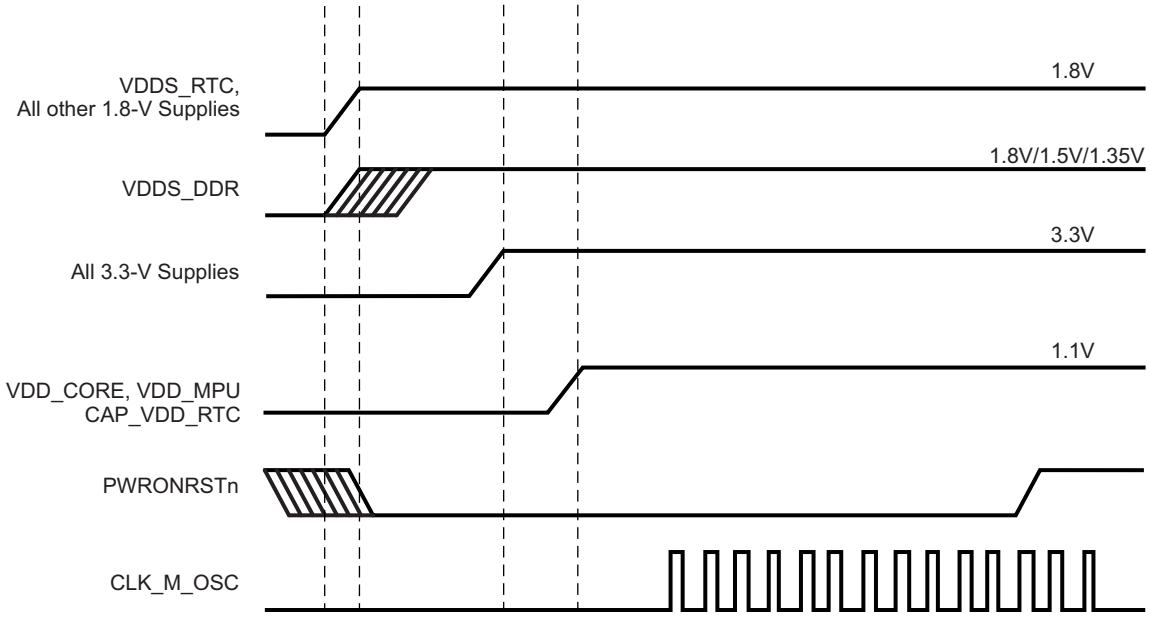

A. CAP_VDD_RTC terminal operates as an input to the RTC core voltage domain when the internal RTC LDO is disabled by connecting the RTC_KALDO_ENn terminal to VDDS_RTC. If the internal RTC LDO is disabled, CAP_VDD_RTC should be sourced from an external 1.1-V power supply. The PMIC_POWER_EN output cannot be used when the RTC is disabled.

B. When using the ZCZ package option, VDD_MPU and VDD_CORE power inputs may be powered from the same source if the application only uses operating performance points (OPPs) that define a common power supply voltage for VDD_MPU and VDD_CORE. The ZCE package option has the VDD_MPU domain merged with the VDD_CORE domain.

C. If a USB port is not used, the respective VDDA1P8V_USB terminal may be connected to any 1.8-V power supply and the respective VDDA3P3V_USB terminal may be connected to any 3.3-V power supply. If the system does not have a 3.3-V power supply, the VDDA3P3V_USB terminal may be connected to ground.

D. If the system uses mDDR or DDR2 memory devices, VDDS_DDR can be ramped simultaneously with the other 1.8-V IO power supplies.

E. VDDS_RTC should be ramped at the same time or before CAP_VDD_RTC, but these power inputs can be ramped independent of other power supplies if PMIC_POWER_EN functionality is not required. If CAP_VDD_RTC is ramped after VDD_CORE, there might be a small amount of additional leakage current on VDD_CORE. The power sequence shown provides the lowest leakage option.

F. To configure VDDSHVx [1-6] as 1.8 V, power up the respective VDDSHVx [1-6] to 1.8 V following the recommended sequence. To configure VDDSHVx [1-6] as 3.3 V, power up the respective VDDSHVx [1-6] to 3.3 V following the recommended sequence.

Figure 4-5. Power-Supply Sequencing with RTC Feature Disabled

4.1.2 Power-Down Sequencing

PWRONRSTn input terminal should be taken low, which stops all internal clocks before power supplies are turned off. All other external clocks to the device should be shut off.

The preferred way to sequence power down is to have all the power supplies ramped down sequentially in the exact reverse order of the power-up sequencing. In other words, the power supply that has been ramped up first should be the last one that should be ramped down. This ensures there would be no spurious current paths during the power-down sequence. The VDDS power supply must ramp down after all 3.3-V VDDSHVx [1-6] power supplies.

If it is desired to ramp down VDDS and VDDSHVx [1-6] simultaneously, it should always be ensured that the difference between VDDS and VDDSHVx [1-6] during the entire power-down sequence is <2 V. Any violation of this could cause reliability risks for the device. Further, it is recommended to maintain VDDS ≥1.5V as all the other supplies fully ramp down to minimize in-rush currents.

If none of the VDDSHVx [1-6] power supplies are configured as 3.3 V, the VDDS power supply may ramp down along with the VDDSHVx [1-6] supplies or after all the VDDSHVx [1-6] supplies have ramped down. It is recommended to maintain VDDS ≥1.5V as all the other supplies fully ramp down to minimize in-rush currents.

4.1.3 VDD_MPU_MON Connections

Figure 4-6 shows the VDD_MPU_MON connectivity. VDD_MPU_MON connectivity is available only on the ZCZ package.

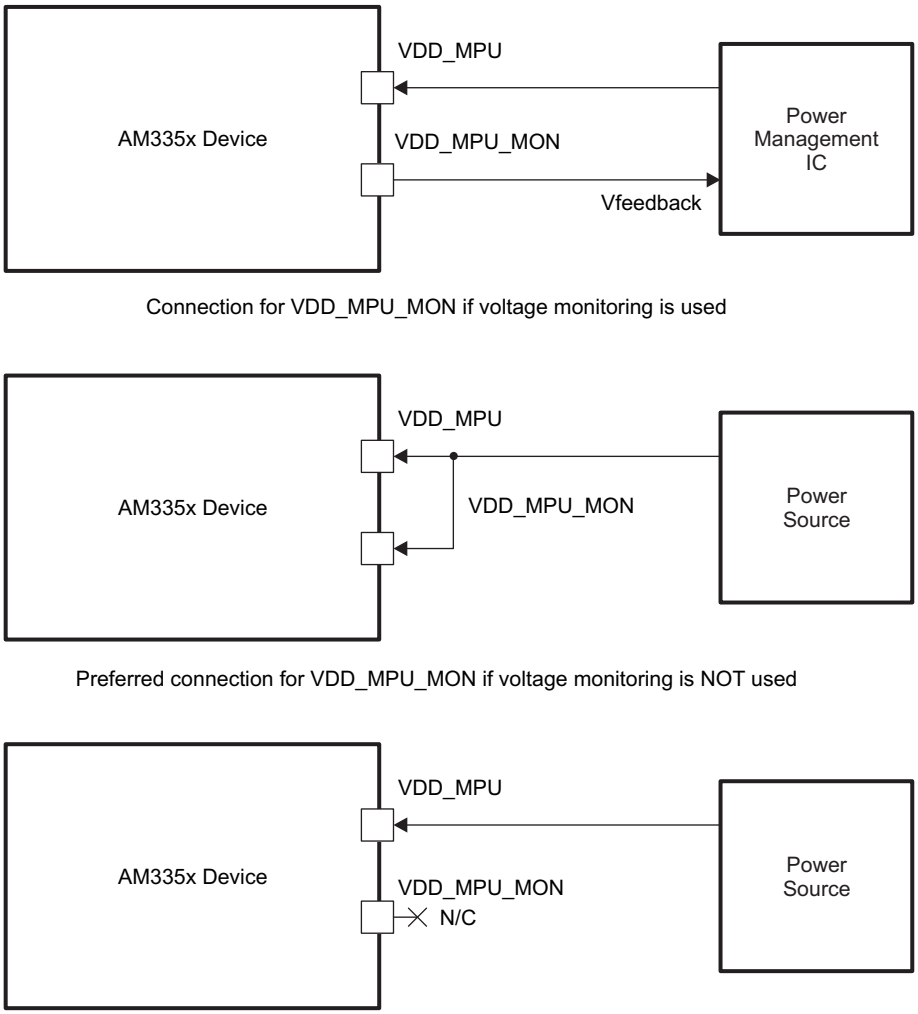

Figure 4-6. VDD_MPU_MON Connectivity

Copyright © 2011–2013, Texas Instruments Incorporated

4.1.4 Digital Phase-Locked Loop Power Supply Requirements

The digital phase-locked loop (DPLL) provides all interface clocks and functional clocks to the processor of the AM335x device. The AM335x device integrates 5 different DPLLs—Core DPLL, Per DPLL, Display DPLL, DDR DPLL, MPU DPLL.

Figure 4-7 illustrates the power supply connectivity implemented in the AM335x device. Table 4-1 provides the power supply requirements for the DPLL.

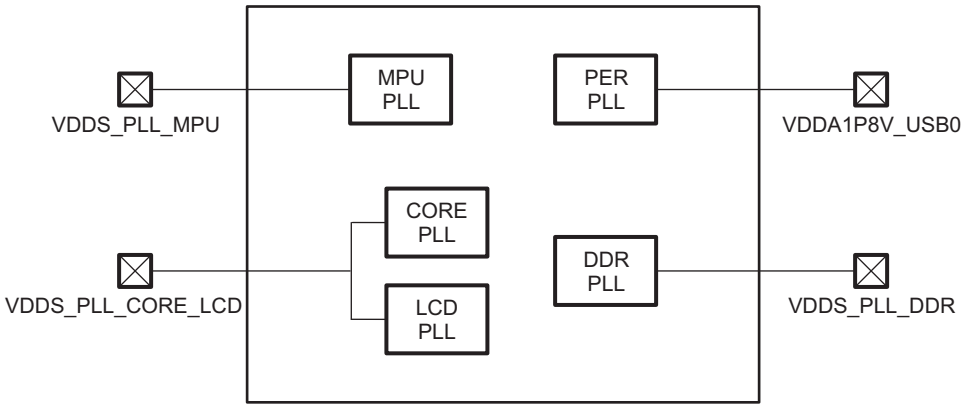

Figure 4-7. DPLL Power Supply Connectivity

Table 4-1. DPLL Power Supply Requirements

SUPPLY NAME	DESCRIPTION	MIN	NOM	MAX	UNITS
VDDA1P8V_USB0	Supply voltage range for USBPHY and PER DPLL, Analog, 1.8V	1.71	1.8	1.89	V
	Max. peak-to-peak supply noise			50	mV (p-p)
VDDS_PLL_MPU	Supply voltage range for DPLL MPU, Analog	1.71	1.8	1.89	V
	Max. peak-to-peak supply noise			50	mV (p-p)
VDDS_PLL_CORE_LCD	Supply voltage range for DPLL CORE and LCD, Analog	1.71	1.8	1.89	V
	Max. peak-to-peak supply noise			50	mV (p-p)
VDDS_PLL_DDR	Supply voltage range for DPLL DDR, Analog	1.71	1.8	1.89	V
	Max. peak-to-peak supply noise			50	mV (p-p)

Copyright © 2011–2013, Texas Instruments Incorporated

4.2 Clock Specifications

4.2.1 Input Clock Specifications

The AM335x device has two clock inputs. Each clock input passes through an internal oscillator which can be connected to an external crystal circuit (oscillator mode) or external LVCMOS square-wave digital clock source (bypass mode). The oscillators automatically operate in bypass mode when their input is connected to an external LVCMOS square-wave digital clock source. The oscillator associated with a specific clock input must be enabled when the clock input is being used in either oscillator mode or bypass mode.

The OSC1 oscillator provides a 32.768-kHz reference clock to the real-time clock (RTC) and is connected to the RTC_XTALIN and RTC_XTALOUT terminals. This clock source is referred to as the 32K oscillator (CLK_32K_RTC) in the *AM335x ARM Cortex-A8 Microprocessors (MPUs) Technical Reference Manual* (literature number SPRUH73). OSC1 is disabled by default after power is applied. This clock input is optional and may not be required if the RTC is configured to receive a clock from the internal 32k RC oscillator (CLK_RC32K) or peripheral PLL (CLK_32KHZ) which receives a reference clock from the OSC0 input.

The OSC0 oscillator provides a 19.2-MHz, 24-MHz, 25-MHz, or 26-MHz reference clock which is used to clock all non-RTC functions and is connected to the XTALIN and XTALOUT terminals. This clock source is referred to as the master oscillator (CLK_M_OSC) in the *AM335x ARM Cortex-A8 Microprocessors (MPUs) Technical Reference Manual* (literature number SPRUH73). OSC0 is enabled by default after power is applied.

For more information related to recommended circuit topologies and crystal oscillator circuit requirements for these clock inputs, see Section 4.2.2.

4.2.2 Input Clock Requirements

4.2.2.1 OSC0 Internal Oscillator Clock Source

Figure 4-8 shows the recommended crystal circuit. It is recommended that pre-production printed circuit board (PCB) designs include the two optional resistors R_{bias} and R_d in case they are required for proper oscillator operation when combined with production crystal circuit components. In most cases, R_{bias} is not required and R_d is a 0-Ω resistor. These resistors may be removed from production PCB designs after evaluating oscillator performance with production crystal circuit components installed on pre-production PCBs.

The XTALIN terminal has a 15 - 40 kΩ internal pull-down resistor which is enabled when OSC0 is disabled. This internal resistor prevents the XTALIN terminal from floating to an invalid logic level which may increase leakage current through the oscillator input buffer.

Copyright © 2011–2013, Texas Instruments Incorporated

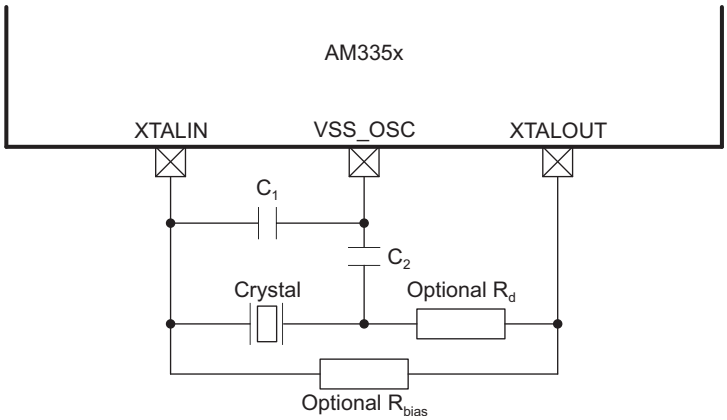

A. Oscillator components (Crystal, C_1, C_2, optional R_{bias} and R_d) must be located close to the AM335x package. Parasitic capacitance to the printed circuit board (PCB) ground and other signals should be minimized to reduce noise coupled into the oscillator. The VSS_OSC terminal provides a Kelvin ground reference for the external crystal components. External crystal component grounds should only be connected to the VSS_OSC terminal and should not be connected to the PCB ground plane.

B. C_1 and C_2 represent the total capacitance of the respective PCB trace, load capacitor, and other components (excluding the crystal) connected to each crystal terminal. The value of capacitors C_1 and C_2 should be selected to provide the total load capacitance, C_L, specified by the crystal manufacturer. The total load capacitance is $C_L = [(C_1*C_2)/(C_1+C_2)] + C_{shunt}$, where C_{shunt} is the crystal shunt capacitance (C_0) specified by the crystal manufacturer plus any mutual capacitance (C_{pkg} + C_{PCB}) seen across the AM335x XTALIN and XTALOUT signals. For recommended values of crystal circuit components, see Table 4-2.

Figure 4-8. OSC0 Crystal Circuit Schematic

Table 4-2. OSC0 Crystal Circuit Requirements

NAME	DESCRIPTION		MIN	TYP	MAX	UNIT
f_{xtal}	Crystal parallel resonance frequency	Fundamental mode oscillation only		19.2, 24.0, 25.0, or 26.0		MHz
	Crystal frequency stability and tolerance		-50.0		50.0	ppm
C_{C1}	C_1 capacitance		12.0		24.0	pF
C_{C2}	C_2 capacitance		12.0		24.0	pF
C_{shunt}	Shunt capacitance				5.0	pF
ESR	Crystal effective series resistance	f_{xtal} = 19.2 MHz, oscillator has nominal negative resistance of 272 Ω and worst-case negative resistance of 163 Ω			54.4	Ω
		f_{xtal} = 24.0 MHz, oscillator has nominal negative resistance of 240 Ω and worst-case negative resistance of 144 Ω			48.0	Ω
		f_{xtal} = 25.0 MHz, oscillator has nominal negative resistance of 233 Ω and worst-case negative resistance of 140 Ω			46.6	Ω
		f_{xtal} = 26.0 MHz, oscillator has nominal negative resistance of 227 Ω and worst-case negative resistance of 137 Ω			45.3	Ω

Table 4-3. OSC0 Crystal Circuit Characteristics

NAME	DESCRIPTION		MIN	TYP	MAX	UNIT
C_{pkg}	Shunt capacitance of package	ZCE package		0.01		pF
		ZCZ package		0.01		pF
P_{xtal}	The actual values of the ESR, f_{xtal}, and C_L should be used to yield a typical crystal power dissipation value. Using the maximum values specified for ESR, f_{xtal}, and C_L parameters yields a maximum power dissipation value.			P_{xtal} = 0.5 ESR (2 π f_{xtal} C_L VDDS_OSC)^2		
t_{sX}	Start-up time			1.5		ms

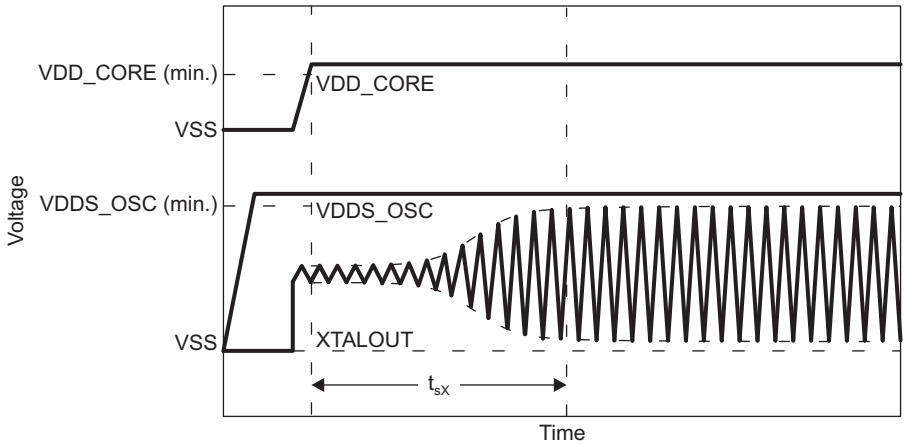

Figure 4-9. OSC0 Start-up Time

Copyright © 2011–2013, Texas Instruments Incorporated

4.2.2.2 OSC0 LVCMOS Digital Clock Source

Figure 4-10 shows the recommended oscillator connections when OSC0 is connected to an LVCMOS square-wave digital clock source. The LVCMOS clock source is connected to the XTALIN terminal. In this mode of operation, the XTALOUT terminal should not be used to source any external components. The printed circuit board design should provide a mechanism to disconnect the XTALOUT terminal from any external components or signal traces that may couple noise into OSC0 via the XTALOUT terminal.

The XTALIN terminal has a 15 - 40 kΩ internal pull-down resistor which is enabled when OSC0 is disabled. This internal resistor prevents the XTALIN terminal from floating to an invalid logic level which may increase leakage current through the oscillator input buffer.

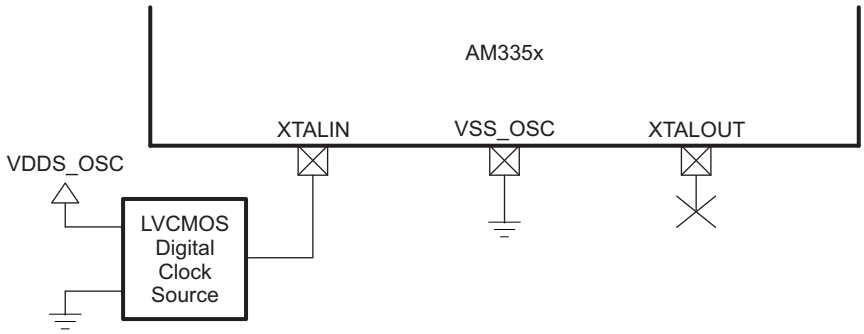

Figure 4-10. OSC0 LVCMOS Circuit Schematic

Table 4-4. OSC0 LVCMOS Reference Clock Requirements

NAME	DESCRIPTION	MIN	TYP	MAX	UNIT
$f_{(XTALIN)}$	Frequency, LVCMOS reference clock		19.2, 24, 25, or 26		MHz
	Frequency, LVCMOS reference clock stability and tolerance(1)	-50		50	ppm
$t_{dc(XTALIN)}$	Duty cycle, LVCMOS reference clock period	45		55	%
$t_{jpp(XTALIN)}$	Jitter peak-to-peak, LVCMOS reference clock period	-1		1	%
$t_{R(XTALIN)}$	Time, LVCMOS reference clock rise			5	ns
$t_{F(XTALIN)}$	Time, LVCMOS reference clock fall			5	ns

(1) Initial accuracy, temperature drift, and aging effects should be combined when evaluating a reference clock for this requirement.

4.2.2.3 OSC1 Internal Oscillator Clock Source

Figure 4-11 shows the recommended crystal circuit for OSC1 of the ZCE package and Figure 4-12 shows the recommended crystal circuit for OSC1 of the ZCZ package. It is recommended that pre-production printed circuit board (PCB) designs include the two optional resistors R_{bias} and R_d in case they are required for proper oscillator operation when combined with production crystal circuit components. In most cases, R_{bias} is not required and R_d is a 0-Ω resistor. These resistors may be removed from production PCB designs after evaluating oscillator performance with production crystal circuit components installed on pre-production PCBs.

The RTC_XTALIN terminal has a 10 - 40 kΩ internal pull-up resistor which is enabled when OSC1 is disabled. This internal resistor prevents the RTC_XTALIN terminal from floating to an invalid logic level which may increase leakage current through the oscillator input buffer.

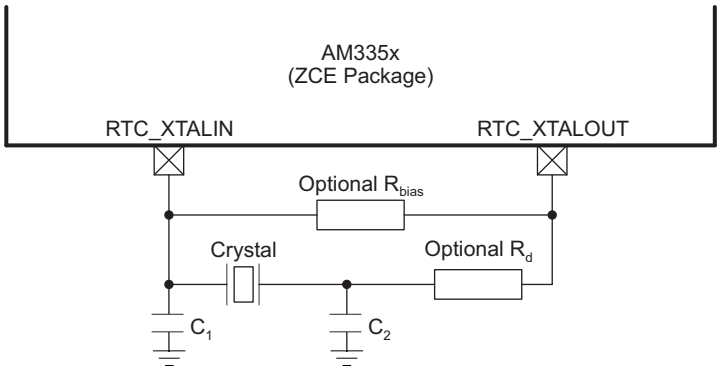

A. Oscillator components (Crystal, C_1, C_2, optional R_{bias} and R_d) must be located close to the AM335x package. Parasitic capacitance to the printed circuit board (PCB) ground and other signals should be minimized to reduce noise coupled into the oscillator.

B. C_1 and C_2 represent the total capacitance of the respective PCB trace, load capacitor, and other components (excluding the crystal) connected to each crystal terminal. The value of capacitors C_1 and C_2 should be selected to provide the total load capacitance, C_L, specified by the crystal manufacturer. The total load capacitance is $C_L = [(C_1*C_2)/(C_1+C_2)] + C_{shunt}$, where C_{shunt} is the crystal shunt capacitance (C_0) specified by the crystal manufacturer plus any mutual capacitance ($C_{pkg} + C_{PCB}$) seen across the AM335x RTC_XTALIN and RTC_XTALOUT signals. For recommended values of crystal circuit components, see Table 4-5.

Figure 4-11. OSC1 (ZCE Package) Crystal Circuit Schematic

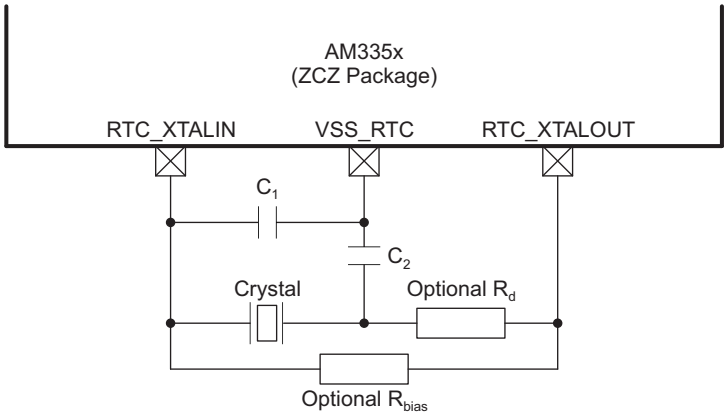

A. Oscillator components (Crystal, C_1, C_2, optional R_{bias} and R_d) must be located close to the AM335x package. Parasitic capacitance to the printed circuit board (PCB) ground and other signals should be minimized to reduce noise coupled into the oscillator.

B. C_1 and C_2 represent the total capacitance of the respective PCB trace, load capacitor, and other components (excluding the crystal) connected to each crystal terminal. The value of capacitors C_1 and C_2 should be selected to provide the total load capacitance, C_L, specified by the crystal manufacturer. The total load capacitance is $C_L = [(C_1*C_2)/(C_1+C_2)] + C_{shunt}$, where C_{shunt} is the crystal shunt capacitance (C_0) specified by the crystal manufacturer plus any mutual capacitance ($C_{pkg} + C_{PCB}$) seen across the AM335x RTC_XTALIN and RTC_XTALOUT signals. For recommended values of crystal circuit components, see Table 4-5.

Figure 4-12. OSC1 (ZCZ Package) Crystal Circuit Schematic

Copyright © 2011–2013, Texas Instruments Incorporated

Table 4-5. OSC1 Crystal Circuit Requirements

NAME	DESCRIPTION		MIN	TYP	MAX	UNIT
f_{xtal}	Crystal parallel resonance frequency	Fundamental mode oscillation only		32.768		kHz
	Crystal frequency stability and tolerance	Maximum RTC error = 10.512 minutes per year	-20.0		20.0	ppm
		Maximum RTC error = 26.28 minutes per year	-50.0		50.0	ppm
C_{C1}	C_1 capacitance		12.0		24.0	pF
C_{C2}	C_2 capacitance		12.0		24.0	pF
C_{shunt}	Shunt capacitance				1.5	pF
ESR	Crystal effective series resistance	f_{xtal} = 32.768 kHz, oscillator has nominal negative resistance of 725 kΩ and worst-case negative resistance of 250 kΩ			80	kΩ

Table 4-6. OSC1 Crystal Circuit Characteristics

NAME	DESCRIPTION		MIN	TYP	MAX	UNIT
C_{pkg}	Shunt capacitance of package	ZCE package		0.17		pF
		ZCZ package		0.01		pF
P_{xtal}	The actual values of the ESR, f_{xtal}, and C_L should be used to yield a typical crystal power dissipation value. Using the maximum values specified for ESR, f_{xtal}, and C_L parameters yields a maximum power dissipation value.			P_{xtal} = 0.5 ESR (2 π f_{xtal} C_L VDDS_RTC)^2		
t_{sX}	Start-up time			2		s

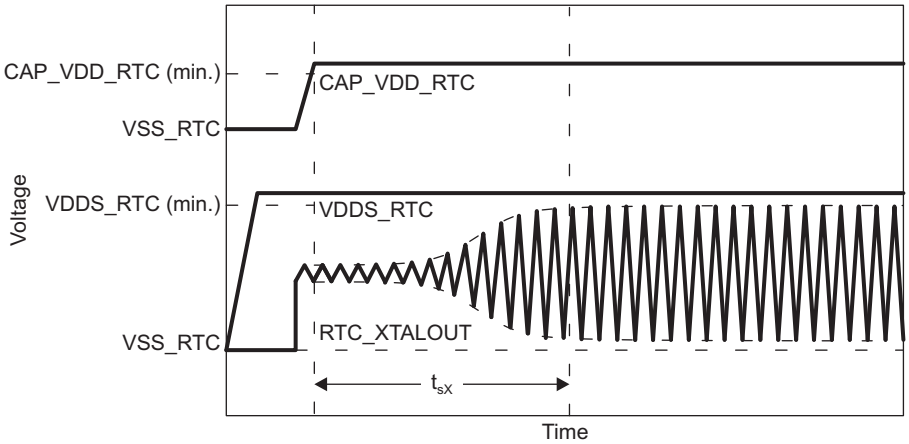

Figure 4-13. OSC1 Start-up Time

4.2.2.4 OSC1 LVCMOS Digital Clock Source

Figure 4-14 shows the recommended oscillator connections when OSC1 of the ZCE package is connected to an LVCMOS square-wave digital clock source and Figure 4-15 shows the recommended oscillator connections when OSC1 of the ZCZ package is connected to an LVCMOS square-wave digital clock source. The LVCMOS clock source is connected to the RTC_XTALIN terminal. In this mode of operation, the RTC_XTALOUT terminal should not be used to source any external components. The printed circuit board design should provide a mechanism to disconnect the RTC_XTALOUT terminal from any external components or signal traces that may couple noise into OSC1 via the RTC_XTALOUT terminal.

The RTC_XTALIN terminal has a 10 - 40 kΩ internal pull-up resistor which is enabled when OSC1 is disabled. This internal resistor prevents the RTC_XTALIN terminal from floating to an invalid logic level which may increase leakage current through the oscillator input buffer.

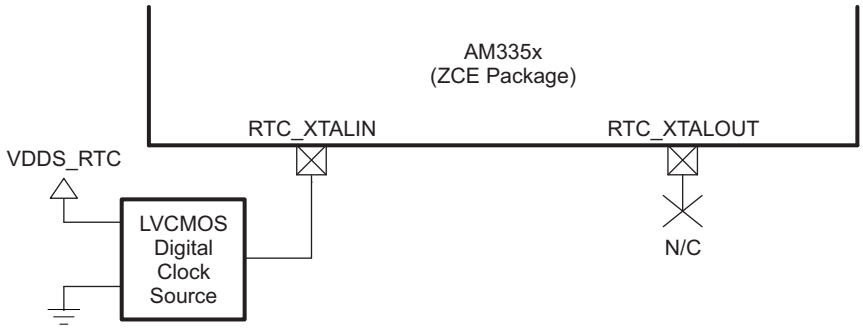

Figure 4-14. OSC1 (ZCE Package) LVCMOS Circuit Schematic

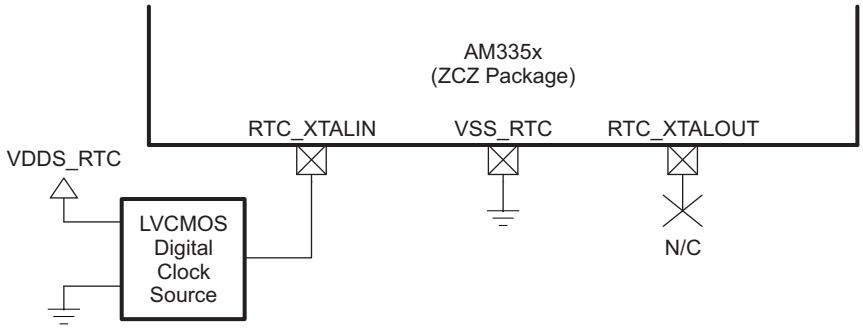

Figure 4-15. OSC1 (ZCZ Package) LVCMOS Circuit Schematic

Table 4-7. OSC1 LVCMOS Reference Clock Requirements

NAME	DESCRIPTION		MIN	TYP	MAX	UNIT
$f_{(RTC_XTALIN)}$	Frequency, LVCMOS reference clock			32.768		MHz
	Frequency, LVCMOS reference clock stability and tolerance(1)	Maximum RTC error = 10.512 minutes/year	-20		20	ppm
		Maximum RTC error = 26.28 minutes/year	-50		50	ppm
$t_{dc(RTC_XTALIN)}$	Duty cycle, LVCMOS reference clock period		45		55	%
$t_{jpp(RTC_XTALIN)}$	Jitter peak-to-peak, LVCMOS reference clock period		-1		1	%
$t_{R(RTC_XTALIN)}$	Time, LVCMOS reference clock rise				5	ns
$t_{F(RTC_XTALIN)}$	Time, LVCMOS reference clock fall				5	ns

(1) Initial accuracy, temperature drift, and aging effects should be combined when evaluating a reference clock for this requirement.

Copyright © 2011–2013, Texas Instruments Incorporated

4.2.2.5 OSC1 Not Used

Figure 4-16 shows the recommended oscillator connections when OSC1 of the ZCE package is not used and Figure 4-17 shows the recommended oscillator connections when OSC1 of the ZCZ package is not used. An internal 10 kΩ pull-up on the RTC_XTALIN terminal is turned on when OSC1 is disabled to prevent this input from floating to an invalid logic level which may increase leakage current through the oscillator input buffer. OSC1 is disabled by default after power is applied. Therefore, both RTC_XTALIN and RTC_XTALOUT terminals should be a no connect (NC) when OSC1 is not used.

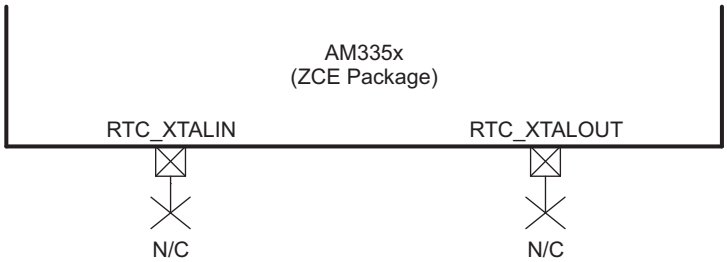

Figure 4-16. OSC1 (ZCE Package) Not Used Schematic

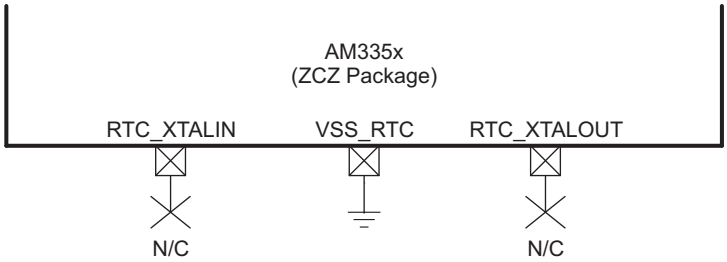

Figure 4-17. OSC1 (ZCZ Package) Not Used Schematic

4.2.3 Output Clock Specifications

The AM335x device has two clock output signals. The CLKOUT1 signal is always a replica of the OSC0 input clock which is referred to as the master oscillator (CLK_M_OSC) in the *AM335x ARM Cortex-A8 Microprocessors (MPUs) Technical Reference Manual* (literature number SPRUH73). The CLKOUT2 signal can be configured to output the OSC1 input clock, which is referred to as the 32K oscillator (CLK_32K_RTC) in the *AM335x ARM Cortex-A8 Microprocessors (MPUs) Technical Reference Manual* (literature number SPRUH73), or four other internal clocks. For more information related to configuring these clock output signals, see the *CLKOUT Signals* section of the *AM335x ARM Cortex-A8 Microprocessors (MPUs) Technical Reference Manual* (literature number SPRUH73).

4.2.4 Output Clock Characteristics

NOTE

The AM335x CLKOUT1 and CLKOUT2 clock outputs should not be used as a synchronous clock for any of the peripheral interfaces because they were not timing closed to any other signals. These clock outputs also were not designed to source any time critical external circuits that require a low jitter reference clock. The jitter performance of these outputs is unpredictable due to complex combinations of many system variables. For example, CLKOUT2 may be sourced from several PLLs with each PLL supporting many configurations that yield different jitter performance. There are also other unpredictable contributors to jitter performance such as application specific noise or crosstalk into the clock circuits. Therefore, there are no plans to specify jitter performance for these outputs.

4.2.4.1 CLKOUT1

The CLKOUT1 signal can be output on the XDMA_EVENT_INTR0 terminal. This terminal connects to one of seven internal signals via configurable multiplexers. The XDMA_EVENT_INTR0 multiplexer must be configured for Mode 3 to connect the CLKOUT1 signal to the XDMA_EVENT_INTR0 terminal.

The default reset configuration of the XDMA_EVENT_INTR0 multiplexer is selected by the logic level applied to the LCD_DATA5 terminal on the rising edge of PWRONRSTn. The XDMA_EVENT_INTR0 multiplexer is configured to Mode 7 if the LCD_DATA5 terminal is low on the rising edge of PWRONRSTn or Mode 3 if the LCD_DATA5 terminal is high on the rising edge of PWRONRSTn. This allows the CLKOUT1 signal to be output on the XDMA_EVENT_INTR0 terminal without software intervention. In this mode, the output is held low while PWRONRSTn is active and begins to toggle after PWRONRSTn is released.

4.2.4.2 CLKOUT2

The CLKOUT2 signal can be output on the XDMA_EVENT_INTR1 terminal. This terminal connects to one of seven internal signals via configurable multiplexers. The XDMA_EVENT_INTR1 multiplexer must be configured for Mode 3 to connect the CLKOUT2 signal to the XDMA_EVENT_INTR1 terminal.

The default reset configuration of the XDMA_EVENT_INTR1 multiplexer is always Mode 7. Software must configure the XDMA_EVENT_INTR1 multiplexer to Mode 3 for the CLKOUT2 signal to be output on the XDMA_EVENT_INTR1 terminal.

Copyright © 2011–2013, Texas Instruments Incorporated

5 Peripheral Information and Timings

The AM335x device contains many peripheral interfaces. In order to reduce package size and lower overall system cost while maintaining maximum functionality, many of the AM335x terminals can multiplex up to eight signal functions. Although there are many combinations of pin multiplexing that are possible, only a certain number of sets, called IO Sets, are valid due to timing limitations. These valid IO Sets were carefully chosen to provide many possible application scenarios for the user.

Texas Instruments has developed a Windows-based application called Pin Mux Utility that helps a system designer select the appropriate pin-multiplexing configuration for their AM335x-based product design. The Pin Mux Utility provides a way to select valid IO Sets of specific peripheral interfaces to ensure the pin-multiplexing configuration selected for a design only uses valid IO Sets supported by the AM335x device.

5.1 Parameter Information

The data provided in the following Timing Requirements and Switching Characteristics tables assumes the device is operating within the Recommended Operating Conditions defined in Section 3, unless otherwise noted.

5.1.1 Timing Parameters and Board Routing Analysis

The timing parameter values specified in this data manual do *not* include delays by board routings. As a good board design practice, such delays must *always* be taken into account. Timing values may be adjusted by increasing or decreasing such delays. TI recommends utilizing the available IO buffer information specification (IBIS) models to analyze the timing characteristics correctly. If needed, external logic hardware such as buffers may be used to compensate any timing differences.

The timing parameter values specified in this data manual assume the SLEWCTRL bit in each pad control register is configured for fast mode (0b).

For the mDDR(LPDDR), DDR2, DDR3, DDR3L memory interface, it is *not* necessary to use the IBIS models to analyze timing characteristics. TI provides a PCB routing rules solution that describes the routing rules to ensure the mDDR(LPDDR), DDR2, DDR3, DDR3L memory interface timings are met.

5.2 Recommended Clock and Control Signal Transition Behavior

All clocks and control signals ***must*** transition between V_{IH} and V_{IL} (or between V_{IL} and V_{IH}) in a monotonic manner.

5.3 Controller Area Network (CAN)

For more information, see the Controller Area Network (CAN) section of the *AM335x ARM Cortex-A8 Microprocessors (MPUs) Technical Reference Manual* (literature number SPRUH73).

5.3.1 DCAN Electrical Data and Timing

Table 5-1. Timing Requirements for DCANx Receive

(see Figure 5-1)

NO.			MIN	MAX	UNIT
	$f_{baud(baud)}$	Maximum programmable baud rate		1	Mbps
1	$t_{w(RX)}$	Pulse duration, receive data bit	H - 2[(1)]	H + 2[(1)]	ns

(1) H = period of baud rate, 1/programmed baud rate.

Table 5-2. Switching Characteristics for DCANx Transmit

(see Figure 5-1)

NO.	PARAMETER		MIN	MAX	UNIT
	$f_{baud(baud)}$	Maximum programmable baud rate		1	Mbps
2	$t_{w(TX)}$	Pulse duration, transmit data bit	H - 2[(1)]	H + 2[(1)]	ns

(1) H = period of baud rate, 1/programmed baud rate.

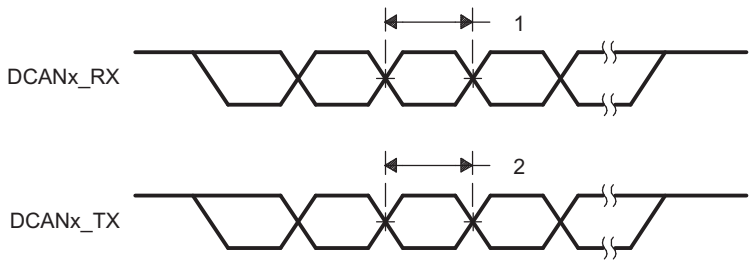

Figure 5-1. DCANx Timings

Copyright © 2011–2013, Texas Instruments Incorporated

5.4 DMTimer

5.4.1 DMTimer Electrical Data and Timing

Table 5-3. Timing Requirements for DMTimer [1-7]

(see Figure 5-2)

NO.			MIN	MAX	UNIT
1	$t_{c(TCLKIN)}$	Cycle time, TCLKIN	4P+1 (1)		ns

(1) P = period of PICLKOCP (interface clock).

Table 5-4. Switching Characteristics for DMTimer [4-7]

(see Figure 5-2)

NO.	PARAMETER		MIN	MAX	UNIT
2	$t_{w(TIMERxH)}$	Pulse duration, high	4P-3 (1)		ns
3	$t_{w(TIMERxL)}$	Pulse duration, low	4P-3 (1)		ns

(1) P = period of PICLKTIMER (functional clock).

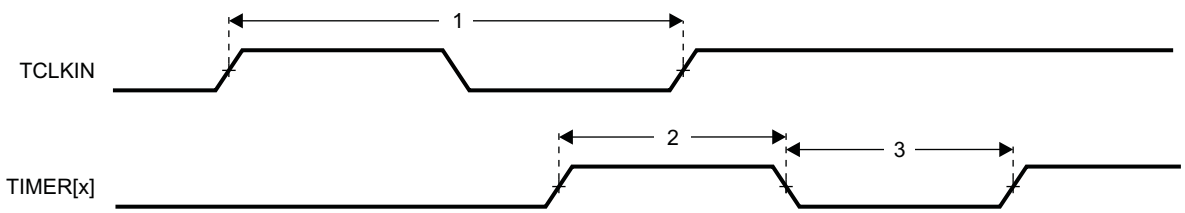

Figure 5-2. Timer Timing

5.5 Ethernet Media Access Controller (EMAC) and Switch

5.5.1 Ethernet MAC and Switch Electrical Data and Timing

The Ethernet MAC and Switch implemented in the AM335x device supports GMII mode, but the AM335x design does not pin out 9 of the 24 GMII signals. This was done to reduce the total number of package terminals. Therefore, the AM335x device does not support GMII mode. MII mode is supported with the remaining GMII signals.

The *AM335x ARM Cortex-A8 Microprocessors (MPUs) Technical Reference Manual* (literature number SPRUH73) and this document may reference internal signal names when discussing peripheral input and output signals since many of the AM335x package terminals can be multiplexed to one of several peripheral signals. For example, the AM335x terminal names for port 1 of the Ethernet MAC and switch have been changed from GMII to MII to indicate their Mode 0 function, but the internal signal is named GMII. However, documents that describe the Ethernet switch reference these signals by their internal signal name. For a cross-reference of internal signal names to terminal names, see Table 2-7.

Operation of the Ethernet MAC and switch is not supported for OPP50.

Table 5-5. Ethernet MAC and Switch Timing Conditions

TIMING CONDITION PARAMETER		MIN	TYP	MAX	UNIT
Input Conditions					
t_R	Input signal rise time	1(1)		5(1)	ns
t_F	Input signal fall time	1(1)		5(1)	ns
Output Condition					
C_{LOAD}	Output load capacitance	3		30	pF

(1) Except when specified otherwise.

5.5.1.1 Ethernet MAC/Switch MDIO Electrical Data and Timing

Table 5-6. Timing Requirements for MDIO_DATA

(see Figure 5-3)

NO.			MIN	TYP	MAX	UNIT
1	$t_{su(MDIO-MDC)}$	Setup time, MDIO valid before MDC high	90			ns
2	$t_{h(MDIO-MDC)}$	Hold time, MDIO valid from MDC high	0			ns

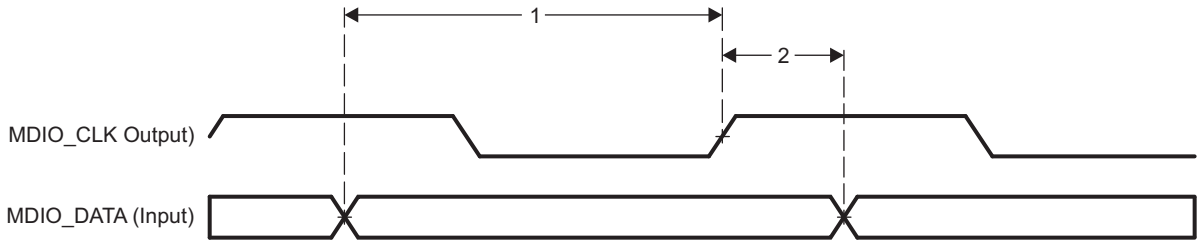

Figure 5-3. MDIO_DATA Timing - Input Mode

Table 5-7. Switching Characteristics for MDIO_CLK

(see Figure 5-4)

NO.	PARAMETER		MIN	TYP	MAX	UNIT
1	$t_{c(MDC)}$	Cycle time, MDC	400			ns
2	$t_{w(MDCH)}$	Pulse duration, MDC high	160			ns
3	$t_{w(MDCL)}$	Pulse duration, MDC low	160			ns
4	$t_{t(MDC)}$	Transition time, MDC			5	ns

Copyright © 2011–2013, Texas Instruments Incorporated

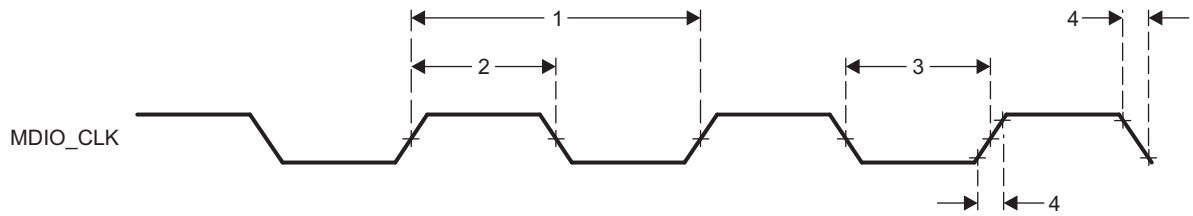

Figure 5-4. MDIO_CLK Timing

Table 5-8. Switching Characteristics for MDIO_DATA

(see Figure 5-5)

NO.	PARAMETER		MIN	TYP	MAX	UNIT
1	$t_{d(MDC-MDIO)}$	Delay time, MDC high to MDIO valid	10		390	ns

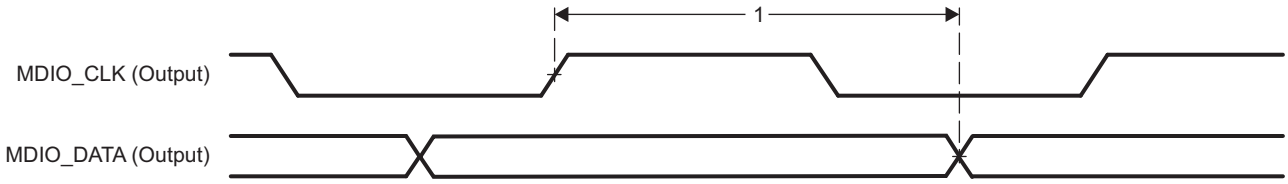

Figure 5-5. MDIO_DATA Timing - Output Mode

5.5.1.2 Ethernet MAC and Switch MII Electrical Data and Timing

Table 5-9. Timing Requirements for GMII[x]_RXCLK - MII Mode

(see Figure 5-6)

NO.			10 Mbps			100 Mbps			UNIT
			MIN	TYP	MAX	MIN	TYP	MAX	
1	$t_{c(RX_CLK)}$	Cycle time, RX_CLK	399.96		400.04	39.996		40.004	ns
2	$t_{w(RX_CLKH)}$	Pulse Duration, RX_CLK high	140		260	14		26	ns
3	$t_{w(RX_CLKL)}$	Pulse Duration, RX_CLK low	140		260	14		26	ns
4	$t_{t(RX_CLK)}$	Transition time, RX_CLK			5			5	ns

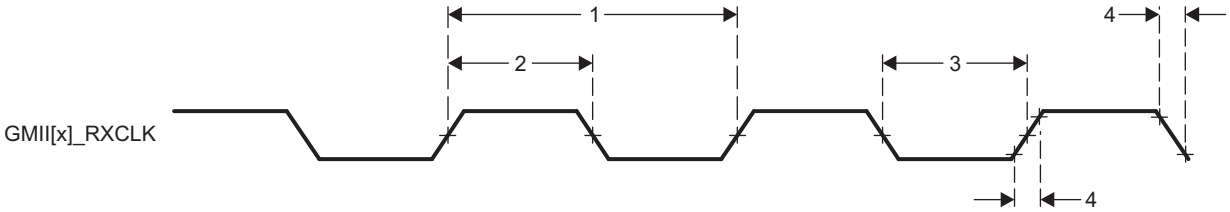

Figure 5-6. GMII[x]_RXCLK Timing - MII Mode

Table 5-10. Timing Requirements for GMII[x]_TXCLK - MII Mode

(see Figure 5-7)

NO.			10 Mbps			100 Mbps			UNIT
			MIN	TYP	MAX	MIN	TYP	MAX	
1	$t_{c(TX_CLK)}$	Cycle time, TX_CLK	399.96		400.04	39.996		40.004	ns
2	$t_{w(TX_CLKH)}$	Pulse Duration, TX_CLK high	140		260	14		26	ns
3	$t_{w(TX_CLKL)}$	Pulse Duration, TX_CLK low	140		260	14		26	ns
4	$t_{t(TX_CLK)}$	Transition time, TX_CLK			5			5	ns

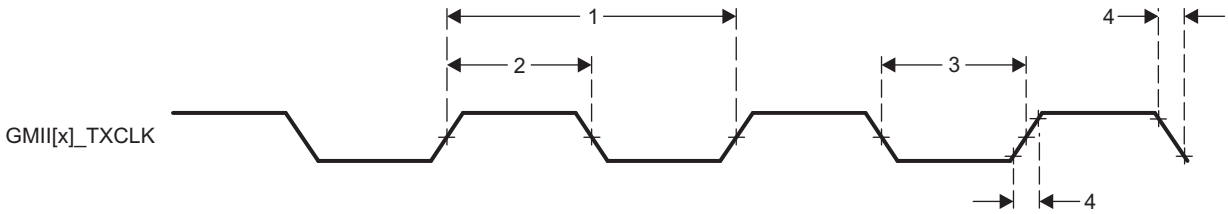

Figure 5-7. GMII[x]_TXCLK Timing - MII Mode

Table 5-11. Timing Requirements for GMII[x]_RXD[3:0], GMII[x]_RXDV, and GMII[x]_RXER - MII Mode

(see Figure 5-8)

NO.			10 Mbps			100 Mbps			UNIT
			MIN	TYP	MAX	MIN	TYP	MAX	
1	$t_{su(RXD\text{-}RX_CLK)}$	Setup time, RXD[3:0] valid before RX_CLK	8			8			ns
	$t_{su(RX_DV\text{-}RX_CLK)}$	Setup time, RX_DV valid before RX_CLK							
	$t_{su(RX_ER\text{-}RX_CLK)}$	Setup time, RX_ER valid before RX_CLK							
2	$t_{h(RX_CLK\text{-}RXD)}$	Hold time RXD[3:0] valid after RX_CLK	8			8			ns
	$t_{h(RX_CLK\text{-}RX_DV)}$	Hold time RX_DV valid after RX_CLK							
	$t_{h(RX_CLK\text{-}RX_ER)}$	Hold time RX_ER valid after RX_CLK							

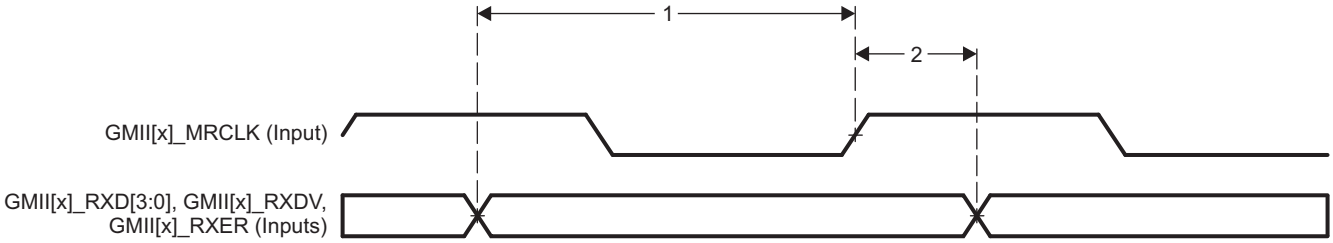

Figure 5-8. GMII[x]_RXD[3:0], GMII[x]_RXDV, GMII[x]_RXER Timing - MII Mode

Copyright © 2011–2013, Texas Instruments Incorporated

Table 5-12. Switching Characteristics for GMII[x]_TXD[3:0], and GMII[x]_TXEN - MII Mode

(see Figure 5-9)

NO.	PARAMETER		10 Mbps			100 Mbps			UNIT
			MIN	TYP	MAX	MIN	TYP	MAX	
1	$t_{d(TX_CLK-TXD)}$	Delay time, TX_CLK high to TXD[3:0] valid	5		25	5		25	ns
	$t_{d(TX_CLK-TX_EN)}$	Delay time, TX_CLK to TX_EN valid							

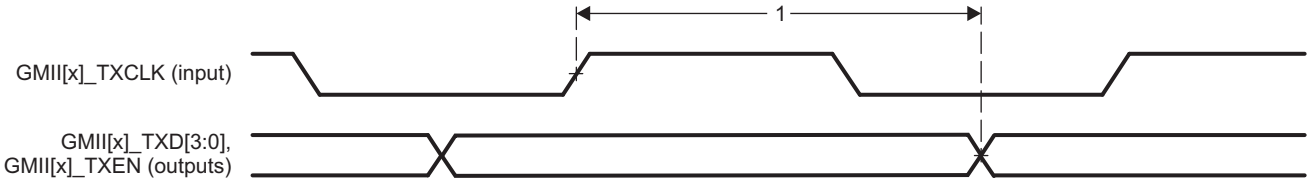

Figure 5-9. GMII[x]_TXD[3:0], GMII[x]_TXEN Timing - MII Mode

5.5.1.3 Ethernet MAC and Switch RMII Electrical Data and Timing

Table 5-13. Timing Requirements for RMII[x]_REFCLK - RMII Mode

(see Figure 5-10)

NO.			MIN	TYP	MAX	UNIT
1	$t_{c(REF_CLK)}$	Cycle time, REF_CLK	19.999		20.001	ns
2	$t_{w(REF_CLKH)}$	Pulse Duration, REF_CLK high	7		13	ns
3	$t_{w(REF_CLKL)}$	Pulse Duration, REF_CLK low	7		13	ns

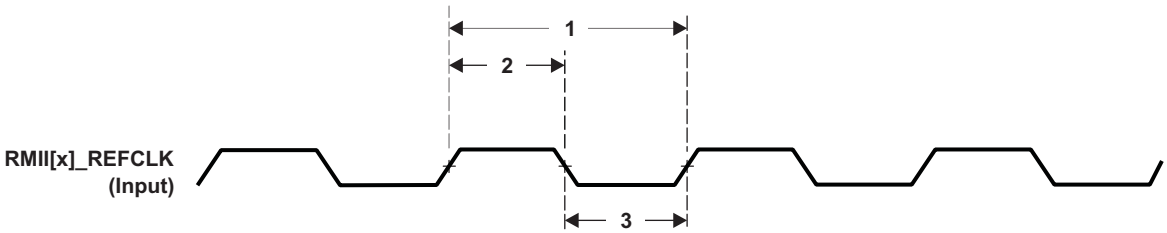

Figure 5-10. RMII[x]_REFCLK Timing - RMII Mode

Table 5-14. Timing Requirements for RMII[x]_RXD[1:0], RMII[x]_CRS_DV, and RMII[x]_RXER - RMII Mode

(see Figure 5-11)

NO.			MIN	TYP	MAX	UNIT
1	$t_{su(RXD\text{-}REF_CLK)}$	Setup time, RXD[1:0] valid before REF_CLK	4			ns
	$t_{su(CRS_DV\text{-}REF_CLK)}$	Setup time, CRS_DV valid before REF_CLK				
	$t_{su(RX_ER\text{-}REF_CLK)}$	Setup time, RX_ER valid before REF_CLK				
2	$t_{h(REF_CLK\text{-}RXD)}$	Hold time RXD[1:0] valid after REF_CLK	2			ns
	$t_{h(REF_CLK\text{-}CRS_DV)}$	Hold time, CRS_DV valid after REF_CLK				
	$t_{h(REF_CLK\text{-}RX_ER)}$	Hold time, RX_ER valid after REF_CLK				

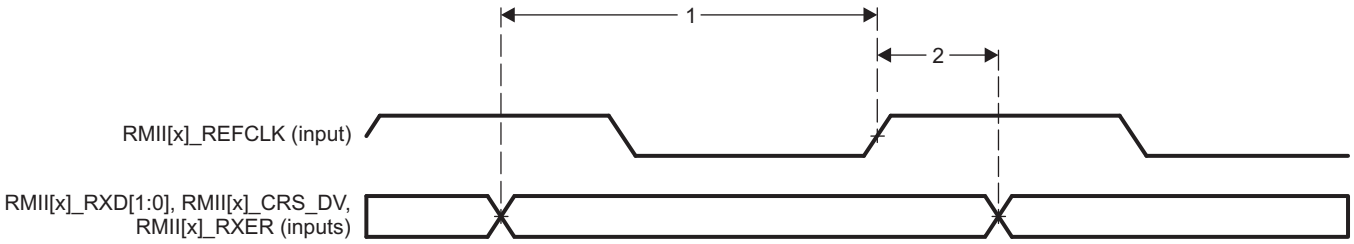

Figure 5-11. RMII[x]_RXD[1:0], RMII[x]_CRS_DV, RMII[x]_RXER Timing - RMII Mode

Copyright © 2011–2013, Texas Instruments Incorporated

Table 5-15. Switching Characteristics for RMII[x]_TXD[1:0], and RMII[x]_TXEN - RMII Mode

(see Figure 5-12)

NO.	PARAMETER		MIN	TYP	MAX	UNIT
1	$t_{d(REF_CLK-TXD)}$	Delay time, REF_CLK high to TXD[1:0] valid	2		13	ns
	$t_{d(REF_CLK-TXEN)}$	Delay time, REF_CLK to TXEN valid				
2	$t_{r(TXD)}$	Rise time, TXD outputs	1		5	ns
	$t_{r(TX_EN)}$	Rise time, TX_EN output				
3	$t_{f(TXD)}$	Fall time, TXD outputs	1		5	ns
	$t_{f(TX_EN)}$	Fall time, TX_EN output				

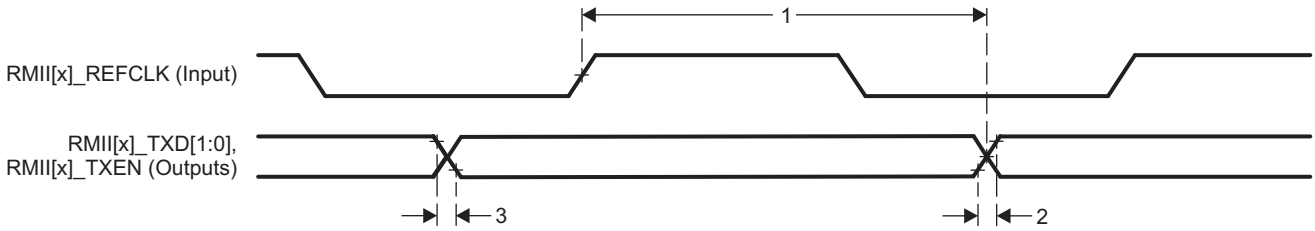

Figure 5-12. RMII[x]_TXD[1:0], RMII[x]_TXEN Timing - RMII Mode

5.5.1.4 Ethernet MAC and Switch RGMII Electrical Data and Timing

Table 5-16. Timing Requirements for RGMII[x]_RCLK - RGMII Mode

(see Figure 5-13)

NO.			10 Mbps			100 Mbps			1000 Mbps			UNIT
			MIN	TYP	MAX	MIN	TYP	MAX	MIN	TYP	MAX	
1	$t_{c(RXC)}$	Cycle time, RXC	360		440	36		44	7.2		8.8	ns
2	$t_{w(RXCH)}$	Pulse duration, RXC high	160		240	16		24	3.6		4.4	ns
3	$t_{w(RXCL)}$	Pulse duration, RXC low	160		240	16		24	3.6		4.4	ns
4	$t_{t(RXC)}$	Transition time, RXC			0.75			0.75			0.75	ns

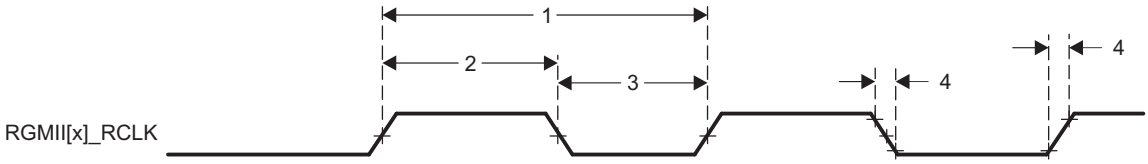

Figure 5-13. RGMII[x]_RCLK Timing - RGMII Mode

Table 5-17. Timing Requirements for RGMII[x]_RD[3:0], and RGMII[x]_RCTL - RGMII Mode

(see Figure 5-14)

NO.			10 Mbps			100 Mbps			1000 Mbps			UNIT
			MIN	TYP	MAX	MIN	TYP	MAX	MIN	TYP	MAX	
1	$t_{su(RD-RXC)}$	Setup time, RD[3:0] valid before RXC high or low	1			1			1			ns
	$t_{su(RX_CTL-RXC)}$	Setup time, RX_CTL valid before RXC high or low	1			1			1			
2	$t_{h(RXC-RD)}$	Hold time, RD[3:0] valid after RXC high or low	1			1			1			ns
	$t_{h(RXC-RX_CTL)}$	Hold time, RX_CTL valid after RXC high or low	1			1			1			
3	$t_{t(RD)}$	Transition time, RD			0.75			0.75			0.75	ns
	$t_{t(RX_CTL)}$	Transition time, RX_CTL			0.75			0.75			0.75	

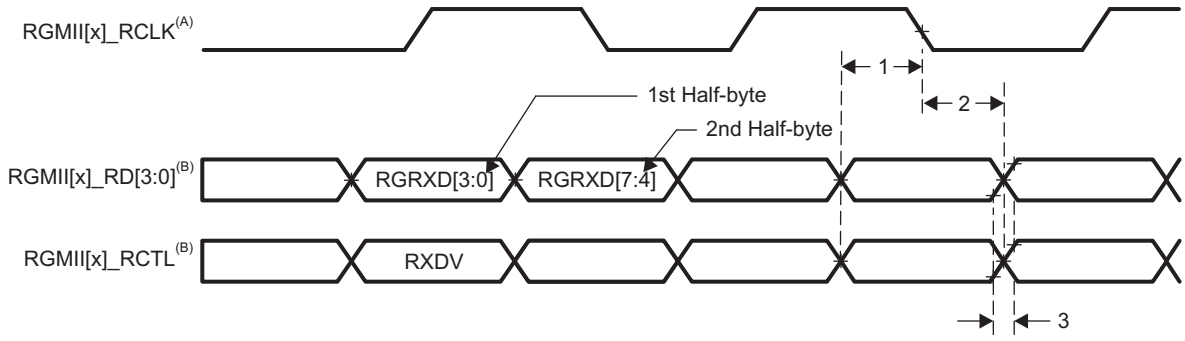

A. RGMII[x]_RCLK must be externally delayed relative to the RGMII[x]_RD[3:0] and RGMII[x]_RCTL signals to meet the respective timing requirements.

B. Data and control information is received using both edges of the clocks. RGMII[x]_RD[3:0] carries data bits 3-0 on the rising edge of RGMII[x]_RCLK and data bits 7-4 on the falling edge of RGMII[x]_RCLK. Similarly, RGMII[x]_RCTL carries RXDV on rising edge of RGMII[x]_RCLK and RXERR on falling edge of RGMII[x]_RCLK.

Figure 5-14. RGMII[x]_RD[3:0], RGMII[x]_RCTL Timing - RGMII Mode

Copyright © 2011–2013, Texas Instruments Incorporated

Table 5-18. Switching Characteristics for RGMII[x]_TCLK - RGMII Mode

(see Figure 5-15)

NO.	PARAMETER		10 Mbps			100 Mbps			1000 Mbps			UNIT
			MIN	TYP	MAX	MIN	TYP	MAX	MIN	TYP	MAX	
1	$t_{c(TXC)}$	Cycle time, TXC	360		440	36		44	7.2		8.8	ns
2	$t_{w(TXCH)}$	Pulse duration, TXC high	160		240	16		24	3.6		4.4	ns
3	$t_{w(TXCL)}$	Pulse duration, TXC low	160		240	16		24	3.6		4.4	ns
4	$t_{t(TXC)}$	Transition time, TXC			0.75			0.75			0.75	ns

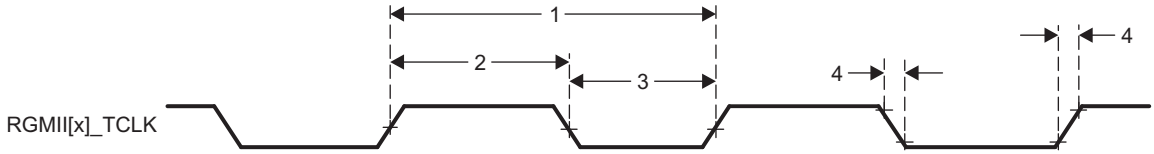

Figure 5-15. RGMII[x]_TCLK Timing - RGMII Mode

Table 5-19. Switching Characteristics for RGMII[x]_TD[3:0], and RGMII[x]_TCTL - RGMII Mode

(see Figure 5-16)

NO.	PARAMETER		10 Mbps			100 Mbps			1000 Mbps			UNIT
			MIN	TYP	MAX	MIN	TYP	MAX	MIN	TYP	MAX	
1	$t_{sk(TD-TXC)}$	TD to TXC output skew	-0.5		0.5	-0.5		0.5	-0.5		0.5	ns
	$t_{sk(TX_CTL-TXC)}$	TX_CTL to TXC output skew	-0.5		0.5	-0.5		0.5	-0.5		0.5	
2	$t_{t(TD)}$	Transition time, TD			0.75			0.75			0.75	ns
	$t_{t(TX_CTL)}$	Transition time, TX_CTL			0.75			0.75			0.75	

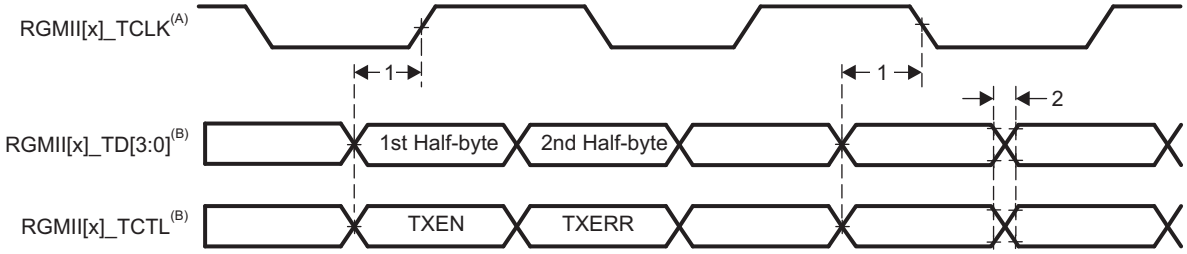

A. The Ethernet MAC and switch implemented in the AM335x device supports internal delay mode, but timing closure was not performed for this mode of operation. Therefore, the AM335x device does not support internal delay mode.

B. Data and control information is transmitted using both edges of the clocks. RGMII[x]_TD[3:0] carries data bits 3-0 on the rising edge of RGMII[x]_TCLK and data bits 7-4 on the falling edge of RGMII[x]_TCLK. Similarly, RGMII[x]_TCTL carries TXEN on rising edge of RGMII[x]_TCLK and TXERR of falling edge of RGMII[x]_TCLK.

Figure 5-16. RGMII[x]_TD[3:0], RGMII[x]_TCTL Timing - RGMII Mode

5.6 External Memory Interfaces

The device includes the following external memory interfaces:

- General-purpose memory controller (GPMC)
- mDDR(LPDDR), DDR2, DDR3, DDR3L Memory Interface (EMIF)

5.6.1 General-Purpose Memory Controller (GPMC)

NOTE

For more information, see the Memory Subsystem and General-Purpose Memory Controller section of the *AM335x ARM Cortex-A8 Microprocessors (MPUs) Technical Reference Manual* (literature number SPRUH73).

The GPMC is the unified memory controller used to interface external memory devices such as:

- Asynchronous SRAM-like memories and ASIC devices
- Asynchronous page mode and synchronous burst NOR flash
- NAND flash

5.6.1.1 GPMC and NOR Flash—Synchronous Mode

Table 5-21 and Table 5-22 assume testing over the recommended operating conditions and electrical characteristic conditions below (see Figure 5-17 through Figure 5-21).

Table 5-20. GPMC and NOR Flash Timing Conditions—Synchronous Mode

TIMING CONDITION PARAMETER		MIN	TYP	MAX	UNIT
Input Conditions					
t_R	Input signal rise time	1		5	ns
t_F	Input signal fall time	1		5	ns
Output Condition					
C_{LOAD}	Output load capacitance	3		30	pF

Table 5-21. GPMC and NOR Flash Timing Requirements—Synchronous Mode

NO.			OPP100		OPP50		UNIT
			MIN	MAX	MIN	MAX	
F12	$t_{su(dV-clkH)}$	Setup time, input data gpmc_ad[15:0] valid before output clock gpmc_clk high	3.2		13.2		ns
F13	$t_{h(clkH-dV)}$	Hold time, input data gpmc_ad[15:0] valid after output clock gpmc_clk high	4.74		2.75		ns
F21	$t_{su(waitV-clkH)}$	Setup time, input wait gpmc_wait[x][(1)] valid before output clock gpmc_clk high	3.2		13.2		ns
F22	$t_{h(clkH-waitV)}$	Hold time, input wait gpmc_wait[x][(1)] valid after output clock gpmc_clk high	4.74		2.75		ns

(1) In gpmc_wait[x], x is equal to 0 or 1.

Copyright © 2011–2013, Texas Instruments Incorporated

Table 5-22. GPMC and NOR Flash Switching Characteristics—Synchronous Mode[2]

NO.	PARAMETER			OPP100		OPP50		UNIT
				MIN	MAX	MIN	MAX	
F0	$1 / t_{c(clk)}$	Frequency[15], output clock gpmc_clk			100		50	MHz
F1	$t_{w(clkH)}$	Typical pulse duration, output clock gpmc_clk high		0.5P[12]	0.5P[12]	0.5P[12]	0.5P[12]	ns
F1	$t_{w(clkL)}$	Typical pulse duration, output clock gpmc_clk low		0.5P[12]	0.5P[12]	0.5P[12]	0.5P[12]	ns
	$t_{dc(clk)}$	Duty cycle error, output clock gpmc_clk		-500	500	-500	500	ps
	$t_{J(clk)}$	Jitter standard deviation[16], output clock gpmc_clk			33.33		33.33	ps
	$t_{R(clk)}$	Rise time, output clock gpmc_clk			2		2	ns
	$t_{F(clk)}$	Fall time, output clock gpmc_clk			2		2	ns
	$t_{R(do)}$	Rise time, output data gpmc_ad[15:0]			2		2	ns
	$t_{F(do)}$	Fall time, output data gpmc_ad[15:0]			2		2	ns
F2	$t_{d(clkH-csnV)}$	Delay time, output clock gpmc_clk rising edge to output chip select gpmc_csn[x][11] transition		F[6] - 2.2	F[6] + 4.5	F[6] - 3.2	F[6] + 9.5	ns
F3	$t_{d(clkH-csnIV)}$	Delay time, output clock gpmc_clk rising edge to output chip select gpmc_csn[x][11] invalid		E[5] - 2.2	E[5] + 4.5	E[5] - 3.2	E[5] + 9.5	ns
F4	$t_{d(aV-clk)}$	Delay time, output address gpmc_a[27:1] valid to output clock gpmc_clk first edge		B[2] - 4.5	B[2] + 2.3	B[2] - 5.5	B[2] + 12.3	ns
F5	$t_{d(clkH-aIV)}$	Delay time, output clock gpmc_clk rising edge to output address gpmc_a[27:1] invalid		-2.3	4.5	-3.3	14.5	ns
F6	$t_{d(be[x]nV-clk)}$	Delay time, output lower byte enable and command latch enable gpmc_be0n_cle, output upper byte enable gpmc_be1n valid to output clock gpmc_clk first edge		B[2] - 1.9	B[2] + 2.3	B[2] - 2.9	B[2] + 12.3	ns
F7	$t_{d(clkH-be[x]nIV)}$	Delay time, output clock gpmc_clk rising edge to output lower byte enable and command latch enable gpmc_be0n_cle, output upper byte enable gpmc_be1n invalid		D[4] - 2.3	D[4] + 1.9	D[4] - 3.3	D[4] + 11.9	ns
F8	$t_{d(clkH-advn)}$	Delay time, output clock gpmc_clk rising edge to output address valid and address latch enable gpmc_advn_ale transition		G[7] - 2.3	G[7] + 4.5	G[7] - 3.3	G[7] + 9.5	ns
F9	$t_{d(clkH-advnIV)}$	Delay time, output clock gpmc_clk rising edge to output address valid and address latch enable gpmc_advn_ale invalid		D[4] - 2.3	D[4] + 3.5	D[4] - 3.3	D[4] + 9.5	ns
F10	$t_{d(clkH-oen)}$	Delay time, output clock gpmc_clk rising edge to output enable gpmc_oen transition		H[8] - 2.3	H[8] + 3.5	H[8] - 3.3	H[8] + 8.5	ns
F11	$t_{d(clkH-oenIV)}$	Delay time, output clock gpmc_clk rising edge to output enable gpmc_oen invalid		E[5] - 2.3	E[5] + 3.5	E[5] - 3.3	E[5] + 8.5	ns
F14	$t_{d(clkH-wen)}$	Delay time, output clock gpmc_clk rising edge to output write enable gpmc_wen transition		I[9] - 2.3	I[9] + 4.5	I[9] - 3.3	I[9] + 9.5	ns
F15	$t_{d(clkH-do)}$	Delay time, output clock gpmc_clk rising edge to output data gpmc_ad[15:0] transition		J[10] - 2.3	J[10] + 1.9	J[10] - 3.3	J[10] + 11.9	ns
F17	$t_{d(clkH-be[x]n)}$	Delay time, output clock gpmc_clk rising edge to output lower byte enable and command latch enable gpmc_be0n_cle transition		J[10] - 2.3	J[10] + 1.9	J[10] - 3.3	J[10] + 11.9	ns
F18	$t_{w(csnV)}$	Pulse duration, output chip select gpmc_csn[x][11] low	Read	A[1]		A[1]		ns
			Write	A[1]		A[1]		ns
F19	$t_{w(be[x]nV)}$	Pulse duration, output lower byte enable and command latch enable gpmc_be0n_cle, output upper byte enable gpmc_be1n low	Read	C[3]		C[3]		ns
			Write	C[3]		C[3]		ns
F20	$t_{w(advnV)}$	Pulse duration, output address valid and address latch enable gpmc_advn_ale low	Read	K[13]		K[13]		ns
			Write	K[13]		K[13]		ns

(1) For single read: A = (CSRdOffTime - CSOnTime) * (TimeParaGranularity + 1) * GPMC_FCLK[14]
For burst read: A = (CSRdOffTime - CSOnTime + (n - 1) * PageBurstAccessTime) * (TimeParaGranularity + 1) * GPMC_FCLK[14]
For burst write: A = (CSWrOffTime - CSOnTime + (n - 1) * PageBurstAccessTime) * (TimeParaGranularity + 1) * GPMC_FCLK[14]
With n being the page burst access number.

(2) B = ClkActivationTime * GPMC_FCLK[14]

(3) For single read: C = RdCycleTime * (TimeParaGranularity + 1) * GPMC_FCLK [14]
For burst read: C = (RdCycleTime + (n - 1) * PageBurstAccessTime) * (TimeParaGranularity + 1) * GPMC_FCLK[14]
For burst write: C = (WrCycleTime + (n - 1) * PageBurstAccessTime) * (TimeParaGranularity + 1) * GPMC_FCLK[14]
With n being the page burst access number.

(4) For single read: D = (RdCycleTime - AccessTime) * (TimeParaGranularity + 1) * GPMC_FCLK[14]
For burst read: D = (RdCycleTime - AccessTime) * (TimeParaGranularity + 1) * GPMC_FCLK[14]
For burst write: D = (WrCycleTime - AccessTime) * (TimeParaGranularity + 1) * GPMC_FCLK[14]

(5) For single read: E = (CSRdOffTime - AccessTime) * (TimeParaGranularity + 1) * GPMC_FCLK[14]
For burst read: E = (CSRdOffTime - AccessTime) * (TimeParaGranularity + 1) * GPMC_FCLK[14]
For burst write: E = (CSWrOffTime - AccessTime) * (TimeParaGranularity + 1) * GPMC_FCLK[14]

(6) For csn falling edge (CS activated):
- Case GpmcFCLKDivider = 0:
  - F = 0.5 * CSExtraDelay * GPMC_FCLK[14]
- Case GpmcFCLKDivider = 1:
  - F = 0.5 * CSExtraDelay * GPMC_FCLK[14] if (ClkActivationTime and CSOnTime are odd) or (ClkActivationTime and CSOnTime are even)
  - F = (1 + 0.5 * CSExtraDelay) * GPMC_FCLK[14] otherwise
- Case GpmcFCLKDivider = 2:
  - F = 0.5 * CSExtraDelay * GPMC_FCLK[14] if ((CSOnTime - ClkActivationTime) is a multiple of 3)
  - F = (1 + 0.5 * CSExtraDelay) * GPMC_FCLK[14] if ((CSOnTime - ClkActivationTime - 1) is a multiple of 3)
  - F = (2 + 0.5 * CSExtraDelay) * GPMC_FCLK[14] if ((CSOnTime - ClkActivationTime - 2) is a multiple of 3)

(7) For ADV falling edge (ADV activated):
- Case GpmcFCLKDivider = 0:
  - G = 0.5 * ADVExtraDelay * GPMC_FCLK[14]
- Case GpmcFCLKDivider = 1:
  - G = 0.5 * ADVExtraDelay * GPMC_FCLK[14] if (ClkActivationTime and ADVOnTime are odd) or (ClkActivationTime and ADVOnTime are even)
  - G = (1 + 0.5 * ADVExtraDelay) * GPMC_FCLK[14] otherwise
- Case GpmcFCLKDivider = 2:
  - G = 0.5 * ADVExtraDelay * GPMC_FCLK[14] if ((ADVOnTime - ClkActivationTime) is a multiple of 3)
  - G = (1 + 0.5 * ADVExtraDelay) * GPMC_FCLK[14] if ((ADVOnTime - ClkActivationTime - 1) is a multiple of 3)
  - G = (2 + 0.5 * ADVExtraDelay) * GPMC_FCLK[14] if ((ADVOnTime - ClkActivationTime - 2) is a multiple of 3)

For ADV rising edge (ADV deactivated) in Reading mode:
- Case GpmcFCLKDivider = 0:
  - G = 0.5 * ADVExtraDelay * GPMC_FCLK[14]
- Case GpmcFCLKDivider = 1:
  - G = 0.5 * ADVExtraDelay * GPMC_FCLK[14] if (ClkActivationTime and ADVRdOffTime are odd) or (ClkActivationTime and ADVRdOffTime are even)
  - G = (1 + 0.5 * ADVExtraDelay) * GPMC_FCLK[14] otherwise
- Case GpmcFCLKDivider = 2:
  - G = 0.5 * ADVExtraDelay * GPMC_FCLK[14] if ((ADVRdOffTime - ClkActivationTime) is a multiple of 3)
  - G = (1 + 0.5 * ADVExtraDelay) * GPMC_FCLK[14] if ((ADVRdOffTime - ClkActivationTime - 1) is a multiple of 3)
  - G = (2 + 0.5 * ADVExtraDelay) * GPMC_FCLK[14] if ((ADVRdOffTime - ClkActivationTime - 2) is a multiple of 3)

For ADV rising edge (ADV deactivated) in Writing mode:
- Case GpmcFCLKDivider = 0:
  - G = 0.5 * ADVExtraDelay * GPMC_FCLK[14]
- Case GpmcFCLKDivider = 1:
  - G = 0.5 * ADVExtraDelay * GPMC_FCLK[14] if (ClkActivationTime and ADVWrOffTime are odd) or (ClkActivationTime and ADVWrOffTime are even)
  - G = (1 + 0.5 * ADVExtraDelay) * GPMC_FCLK[14] otherwise
- Case GpmcFCLKDivider = 2:
  - G = 0.5 * ADVExtraDelay * GPMC_FCLK[14] if ((ADVWrOffTime - ClkActivationTime) is a multiple of 3)
  - G = (1 + 0.5 * ADVExtraDelay) * GPMC_FCLK[14] if ((ADVWrOffTime - ClkActivationTime - 1) is a multiple of 3)
  - G = (2 + 0.5 * ADVExtraDelay) * GPMC_FCLK[14] if ((ADVWrOffTime - ClkActivationTime - 2) is a multiple of 3)

(8) For OE falling edge (OE activated) and IO DIR rising edge (Data Bus input direction):
- Case GpmcFCLKDivider = 0:
  - H = 0.5 * OEExtraDelay * GPMC_FCLK[14]
- Case GpmcFCLKDivider = 1:
  - H = 0.5 * OEExtraDelay * GPMC_FCLK[14] if (ClkActivationTime and OEOnTime are odd) or (ClkActivationTime and OEOnTime are even)
  - H = (1 + 0.5 * OEExtraDelay) * GPMC_FCLK[14] otherwise
- Case GpmcFCLKDivider = 2:

Copyright © 2011–2013, Texas Instruments Incorporated

- H = 0.5 * OEExtraDelay * GPMC_FCLK(14) if ((OEOnTime - ClkActivationTime) is a multiple of 3)
- H = (1 + 0.5 * OEExtraDelay) * GPMC_FCLK(14) if ((OEOnTime - ClkActivationTime - 1) is a multiple of 3)
- H = (2 + 0.5 * OEExtraDelay) * GPMC_FCLK(14) if ((OEOnTime - ClkActivationTime - 2) is a multiple of 3)

For OE rising edge (OE deactivated):

- Case GpmcFCLKDivider = 0:
  - H = 0.5 * OEExtraDelay * GPMC_FCLK(14)
- Case GpmcFCLKDivider = 1:
  - H = 0.5 * OEExtraDelay * GPMC_FCLK(14) if (ClkActivationTime and OEOffTime are odd) or (ClkActivationTime and OEOffTime are even)
  - H = (1 + 0.5 * OEExtraDelay) * GPMC_FCLK(14) otherwise
- Case GpmcFCLKDivider = 2:
  - H = 0.5 * OEExtraDelay * GPMC_FCLK(14) if ((OEOffTime - ClkActivationTime) is a multiple of 3)
  - H = (1 + 0.5 * OEExtraDelay) * GPMC_FCLK(14) if ((OEOffTime - ClkActivationTime - 1) is a multiple of 3)
  - H = (2 + 0.5 * OEExtraDelay) * GPMC_FCLK(14) if ((OEOffTime - ClkActivationTime - 2) is a multiple of 3)

(9) For WE falling edge (WE activated):

- Case GpmcFCLKDivider = 0:
  - I = 0.5 * WEExtraDelay * GPMC_FCLK(14)
- Case GpmcFCLKDivider = 1:
  - I = 0.5 * WEExtraDelay * GPMC_FCLK(14) if (ClkActivationTime and WEOnTime are odd) or (ClkActivationTime and WEOnTime are even)
  - I = (1 + 0.5 * WEExtraDelay) * GPMC_FCLK(14) otherwise
- Case GpmcFCLKDivider = 2:
  - I = 0.5 * WEExtraDelay * GPMC_FCLK(14) if ((WEOnTime - ClkActivationTime) is a multiple of 3)
  - I = (1 + 0.5 * WEExtraDelay) * GPMC_FCLK(14) if ((WEOnTime - ClkActivationTime - 1) is a multiple of 3)
  - I = (2 + 0.5 * WEExtraDelay) * GPMC_FCLK(14) if ((WEOnTime - ClkActivationTime - 2) is a multiple of 3)

For WE rising edge (WE deactivated):

- Case GpmcFCLKDivider = 0:
  - I = 0.5 * WEExtraDelay * GPMC_FCLK (14)
- Case GpmcFCLKDivider = 1:
  - I = 0.5 * WEExtraDelay * GPMC_FCLK(14) if (ClkActivationTime and WEOffTime are odd) or (ClkActivationTime and WEOffTime are even)
  - I = (1 + 0.5 * WEExtraDelay) * GPMC_FCLK(14) otherwise
- Case GpmcFCLKDivider = 2:
  - I = 0.5 * WEExtraDelay * GPMC_FCLK(14) if ((WEOffTime - ClkActivationTime) is a multiple of 3)
  - I = (1 + 0.5 * WEExtraDelay) * GPMC_FCLK(14) if ((WEOffTime - ClkActivationTime - 1) is a multiple of 3)
  - I = (2 + 0.5 * WEExtraDelay) * GPMC_FCLK(14) if ((WEOffTime - ClkActivationTime - 2) is a multiple of 3)

(10) J = GPMC_FCLK(14)

(11) In gpmc_csn[x], x is equal to 0, 1, 2, 3, 4 or 5. In gpmc_wait[x], x is equal to 0 or 1.

(12) P = gpmc_clk period in ns

(13) For read: K = (ADVRdOffTime - ADVOnTime) * (TimeParaGranularity + 1) * GPMC_FCLK(14)
For write: K = (ADVWrOffTime - ADVOnTime) * (TimeParaGranularity + 1) * GPMC_FCLK(14)

(14) GPMC_FCLK is general-purpose memory controller internal functional clock period in ns.

(15) Related to the gpmc_clk output clock maximum and minimum frequencies programmable in the GPMC module by setting the GPMC_CONFIG1_CSx configuration register bit field GpmcFCLKDivider.

(16) The jitter probability density can be approximated by a Gaussian function.

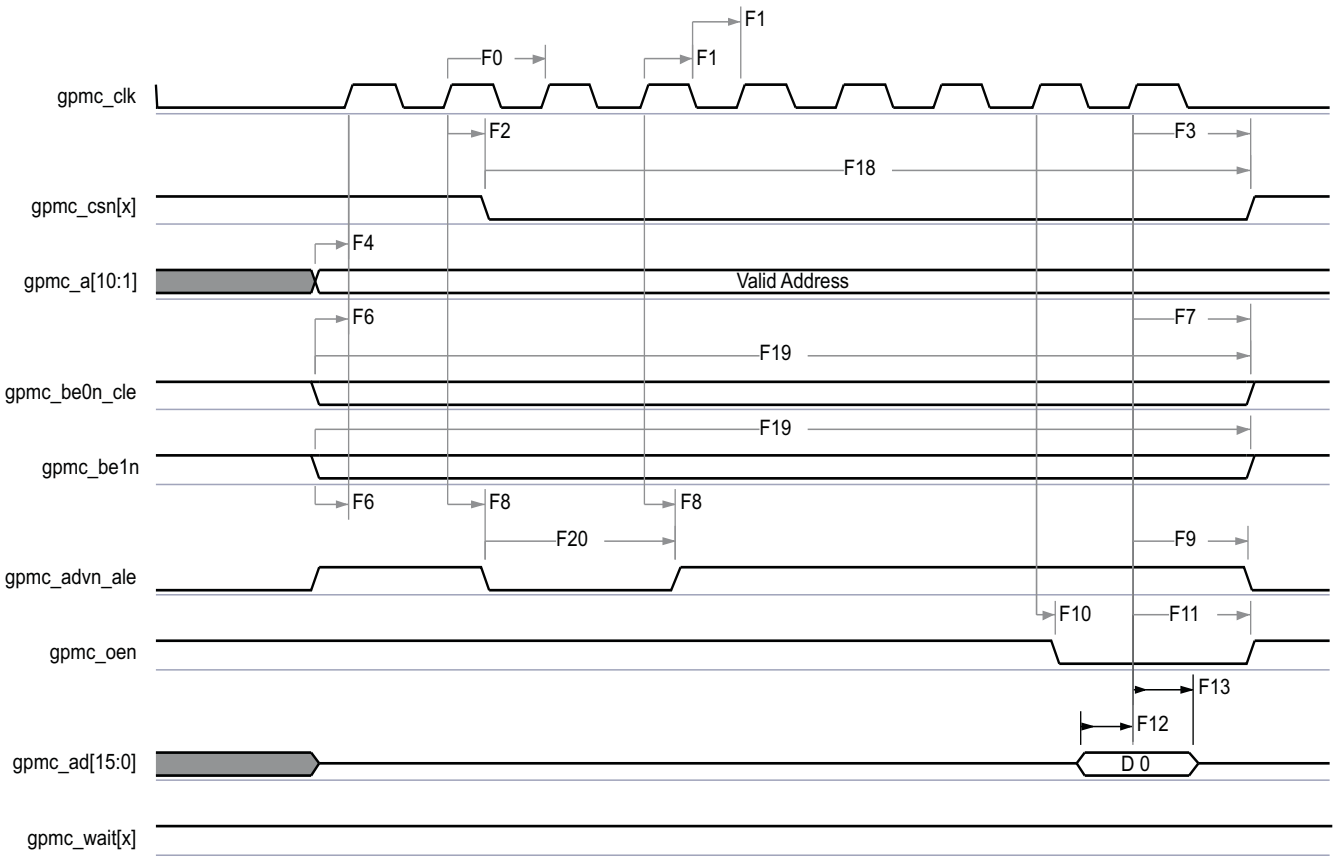

A. In gpmc_csn[x], x is equal to 0, 1, 2, 3, 4 or 5.
B. In gpmc_wait[x], x is equal to 0 or 1.

Figure 5-17. GPMC and NOR Flash—Synchronous Single Read—(GpmcFCLKDivider = 0)

Copyright © 2011–2013, Texas Instruments Incorporated

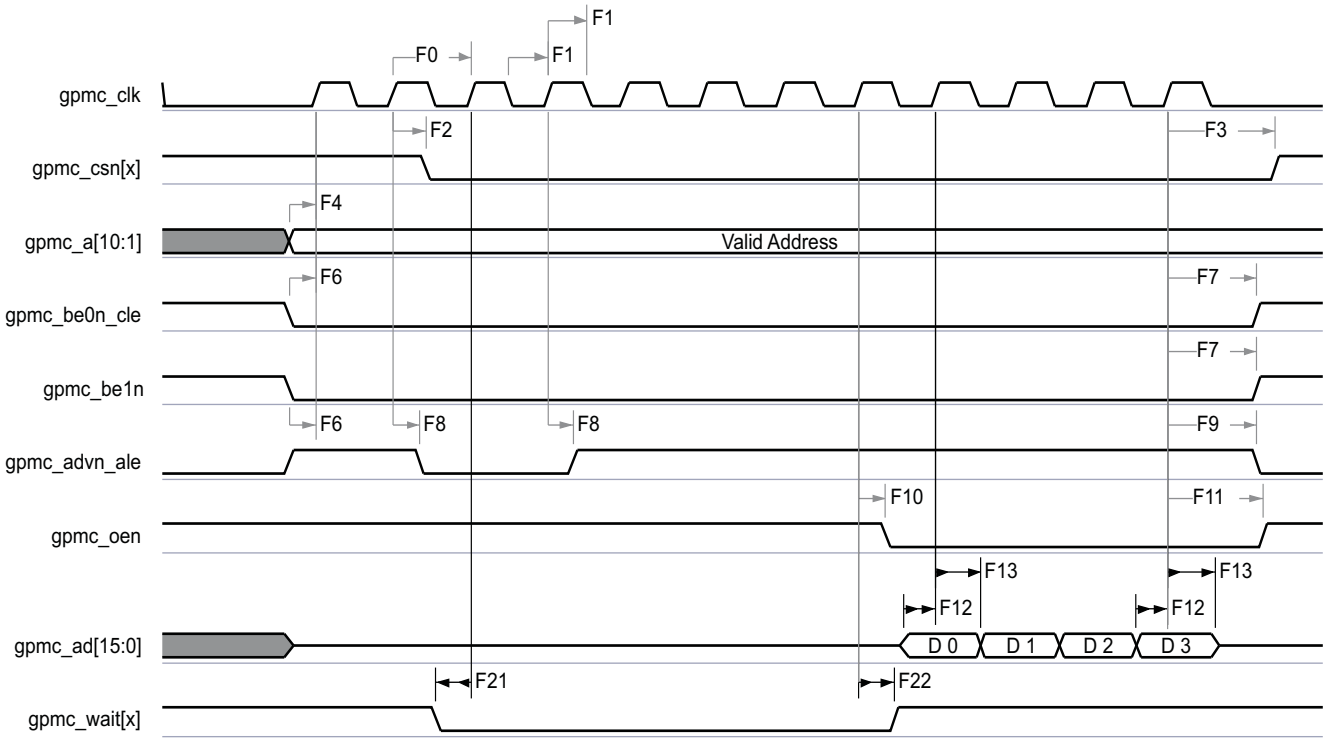

A. In gpmc_csn[x], x is equal to 0, 1, 2, 3, 4 or 5.
B. In gpmc_wait[x], x is equal to 0 or 1.

Figure 5-18. GPMC and NOR Flash—Synchronous Burst Read—4x16-bit (GpmcFCLKDivider = 0)

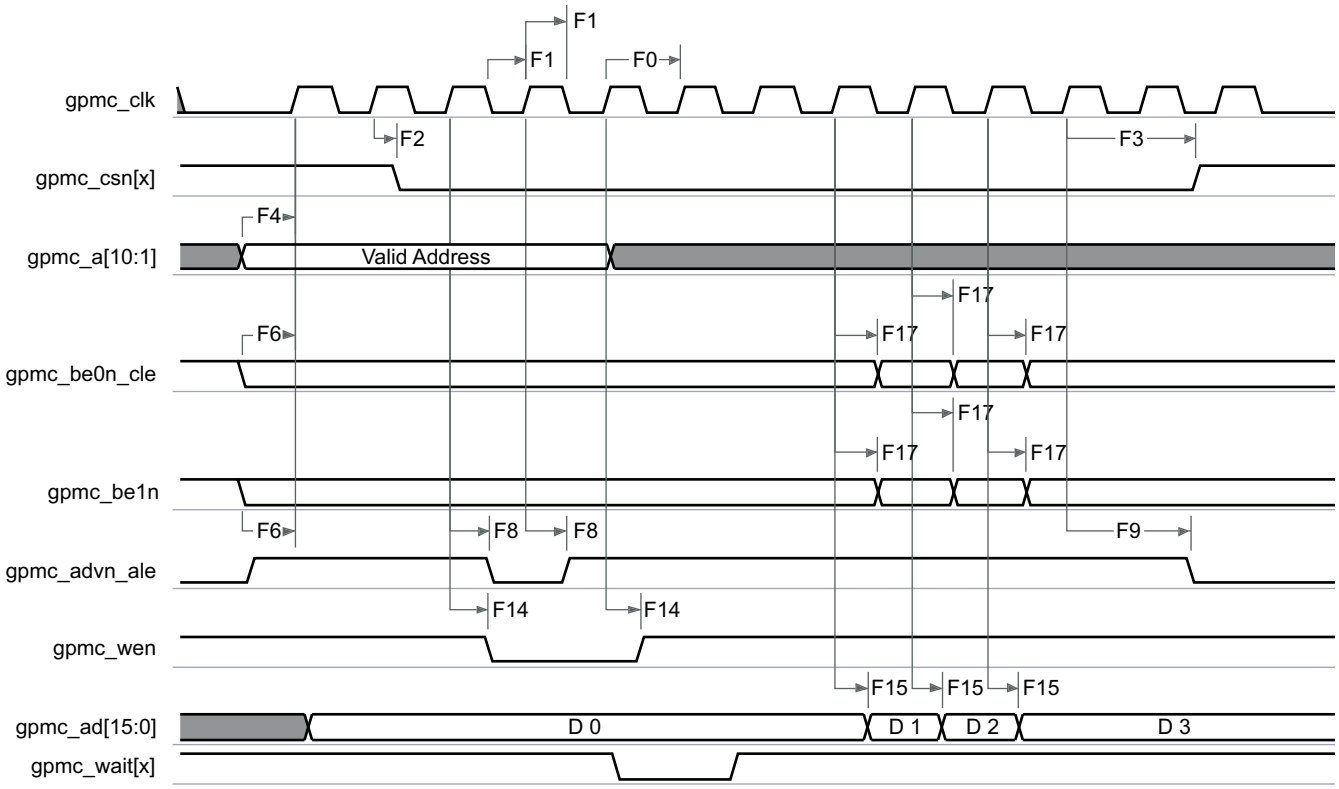

A. In gpmc_csn[x], x is equal to 0, 1, 2, 3, 4 or 5.
B. In gpmc_wait[x], x is equal to 0 or 1.

Figure 5-19. GPMC and NOR Flash—Synchronous Burst Write—(GpmcFCLKDivider > 0)

Copyright © 2011–2013, Texas Instruments Incorporated

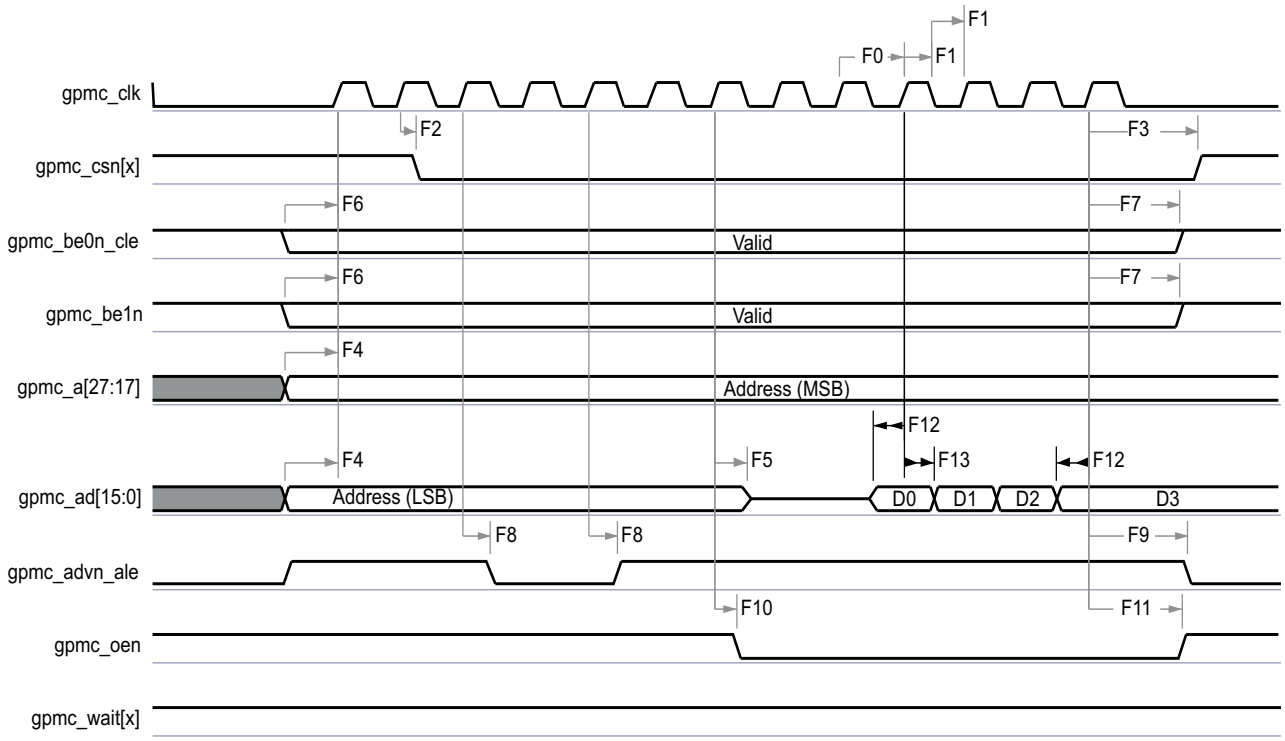

A. In gpmc_csn[x], x is equal to 0, 1, 2, 3, 4 or 5.
B. In gpmc_wait[x], x is equal to 0 or 1.

Figure 5-20. GPMC and Multiplexed NOR Flash—Synchronous Burst Read

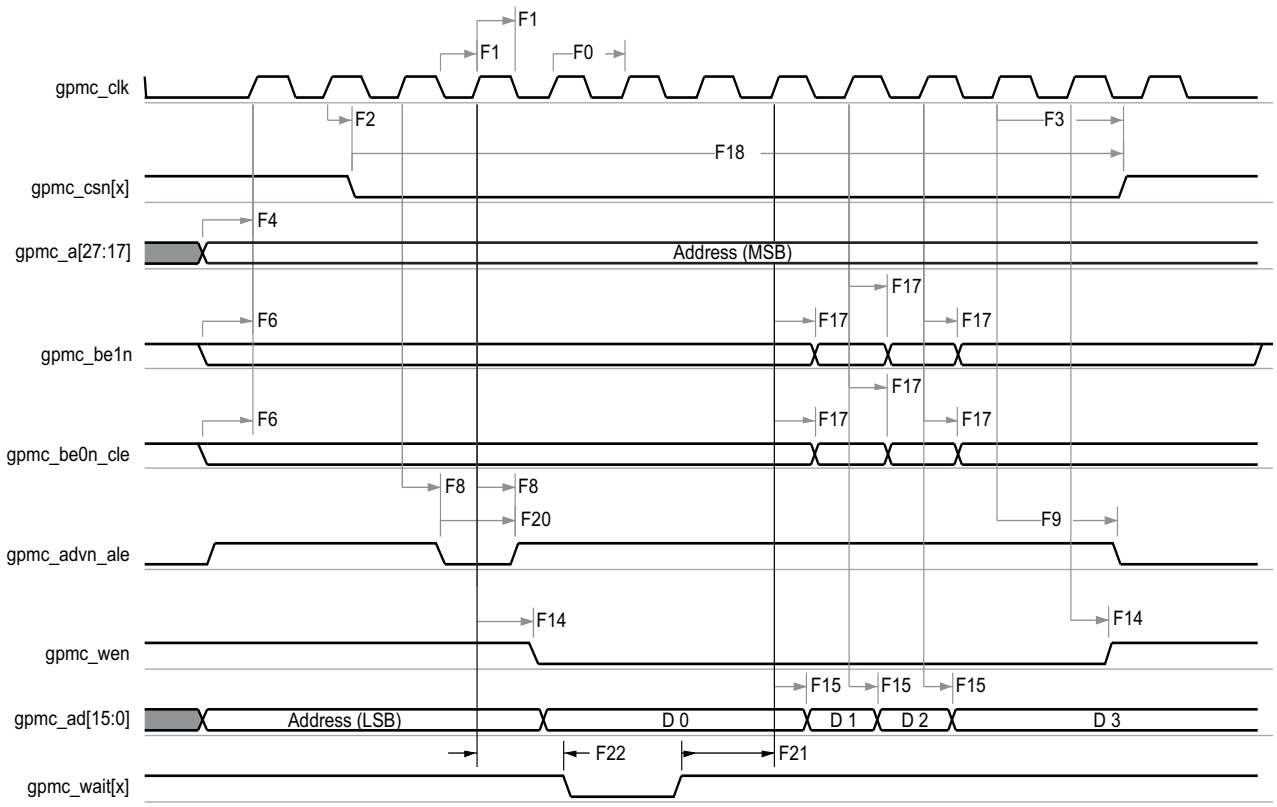

A. In gpmc_csn[x], x is equal to 0, 1, 2, 3, 4 or 5.
B. In gpmc_wait[x], x is equal to 0 or 1.

Figure 5-21. GPMC and Multiplexed NOR Flash—Synchronous Burst Write

Copyright © 2011–2013, Texas Instruments Incorporated

5.6.1.2 GPMC and NOR Flash—Asynchronous Mode

Table 5-24 and Table 5-25 assume testing over the recommended operating conditions and electrical characteristic conditions below (see Figure 5-22 through Figure 5-27).

Table 5-23. GPMC and NOR Flash Timing Conditions—Asynchronous Mode

TIMING CONDITION PARAMETER		MIN	TYP	MAX	UNIT
Input Conditions					
t_R	Input signal rise time	1		5	ns
t_F	Input signal fall time	1		5	ns
Output Condition					
C_{LOAD}	Output load capacitance	3		30	pF

Table 5-24. GPMC and NOR Flash Internal Timing Parameters—Asynchronous Mode(1)(2)

NO.		OPP100		OPP50		UNIT
		MIN	MAX	MIN	MAX	
FI1	Delay time, output data gpmc_ad[15:0] generation from internal functional clock GPMC_FCLK(3)		6.5		6.5	ns
FI2	Delay time, input data gpmc_ad[15:0] capture from internal functional clock GPMC_FCLK(3)		4		4	ns
FI3	Delay time, output chip select gpmc_csn[x] generation from internal functional clock GPMC_FCLK(3)		6.5		6.5	ns
FI4	Delay time, output address gpmc_a[27:1] generation from internal functional clock GPMC_FCLK(3)		6.5		6.5	ns
FI5	Delay time, output address gpmc_a[27:1] valid from internal functional clock GPMC_FCLK(3)		6.5		6.5	ns
FI6	Delay time, output lower-byte enable and command latch enable gpmc_be0n_cle, output upper-byte enable gpmc_be1n generation from internal functional clock GPMC_FCLK(3)		6.5		6.5	ns
FI7	Delay time, output enable gpmc_oen generation from internal functional clock GPMC_FCLK(3)		6.5		6.5	ns
FI8	Delay time, output write enable gpmc_wen generation from internal functional clock GPMC_FCLK(3)		6.5		6.5	ns
FI9	Skew, internal functional clock GPMC_FCLK(3)		100		100	ps

(1) The internal parameters table must be used to calculate data access time stored in the corresponding CS register bit field.

(2) Internal parameters are referred to the GPMC functional internal clock which is not provided externally.

(3) GPMC_FCLK is general-purpose memory controller internal functional clock.

Table 5-25. GPMC and NOR Flash Timing Requirements—Asynchronous Mode

NO.			OPP100		OPP50		UNIT
			MIN	MAX	MIN	MAX	
FA5[1]	$t_{acc(d)}$	Data access time		H[5]		H[5]	ns
FA20[2]	$t_{acc1\text{-}pgmode(d)}$	Page mode successive data access time		P[4]		P[4]	ns
FA21[3]	$t_{acc2\text{-}pgmode(d)}$	Page mode first data access time		H[5]		H[5]	ns

(1) The FA5 parameter illustrates the amount of time required to internally sample input data. It is expressed in number of GPMC functional clock cycles. From start of read cycle and after FA5 functional clock cycles, input data is internally sampled by active functional clock edge. FA5 value must be stored inside the AccessTime register bit field.

(2) The FA20 parameter illustrates amount of time required to internally sample successive input page data. It is expressed in number of GPMC functional clock cycles. After each access to input page data, next input page data is internally sampled by active functional clock edge after FA20 functional clock cycles. The FA20 value must be stored in the PageBurstAccessTime register bit field.

(3) The FA21 parameter illustrates amount of time required to internally sample first input page data. It is expressed in number of GPMC functional clock cycles. From start of read cycle and after FA21 functional clock cycles, first input page data is internally sampled by active functional clock edge. FA21 value must be stored inside the AccessTime register bit field.

(4) P = PageBurstAccessTime * (TimeParaGranularity + 1) * GPMC_FCLK[6]

(5) H = AccessTime * (TimeParaGranularity + 1) * GPMC_FCLK[6]

(6) GPMC_FCLK is general-purpose memory controller internal functional clock period in ns.

Table 5-26. GPMC and NOR Flash Switching Characteristics—Asynchronous Mode

NO.	PARAMETER			OPP100		OPP50		UNIT
				MIN	MAX	MIN	MAX	
	$t_{R(d)}$	Rise time, output data gpmc_ad[15:0]			2		2	ns
	$t_{F(d)}$	Fall time, output data gpmc_ad[15:0]			2		2	ns
FA0	$t_{w(be[x]nV)}$	Pulse duration, output lower-byte enable and command latch enable gpmc_be0n_cle, output upper-byte enable gpmc_be1n valid time	Read		N[12]		N[12]	ns
			Write		N[12]		N[12]	
FA1	$t_{w(csnV)}$	Pulse duration, output chip select gpmc_csn[x][13] low	Read		A[1]		A[1]	ns
			Write		A[1]		A[1]	
FA3	$t_{d(csnV\text{-}advnIV)}$	Delay time, output chip select gpmc_csn[x][13] valid to output address valid and address latch enable gpmc_advn_ale invalid	Read	B[2] - 0.2	B[2] + 2.0	B[2] - 5	B[2] + 5	ns
			Write	B[2] - 0.2	B[2] + 2.0	B[2] - 5	B[2] + 5	
FA4	$t_{d(csnV\text{-}oenIV)}$	Delay time, output chip select gpmc_csn[x][13] valid to output enable gpmc_oen invalid (Single read)		C[3] - 0.2	C[3] + 2.0	C[3] - 5	C[3] + 5	ns
FA9	$t_{d(aV\text{-}csnV)}$	Delay time, output address gpmc_a[27:1] valid to output chip select gpmc_csn[x][13] valid		J[9] - 0.2	J[9] + 2.0	J[9] - 5	J[9] + 5	ns
FA10	$t_{d(be[x]nV\text{-}csnV)}$	Delay time, output lower-byte enable and command latch enable gpmc_be0n_cle, output upper-byte enable gpmc_be1n valid to output chip select gpmc_csn[x][13] valid		J[9] - 0.2	J[9] + 2.0	J[9] - 5	J[9] + 5	ns
FA12	$t_{d(csnV\text{-}advnV)}$	Delay time, output chip select gpmc_csn[x][13] valid to output address valid and address latch enable gpmc_advn_ale valid		K[10] - 0.2	K[10] + 2.0	K[10] - 5	K[10] + 5	ns
FA13	$t_{d(csnV\text{-}oenV)}$	Delay time, output chip select gpmc_csn[x][13] valid to output enable gpmc_oen valid		L[11] - 0.2	L[11] + 2.0	L [11] - 5	L[11] + 5	ns
FA16	$t_{w(aIV)}$	Pulse durationm output address gpmc_a[26:1] invalid between 2 successive read and write accesses		G[7]		G[7]		ns
FA18	$t_{d(csnV\text{-}oenIV)}$	Delay time, output chip select gpmc_csn[x][13] valid to output enable gpmc_oen invalid (Burst read)		I[8] - 0.2	I[8] + 2.0	I[8] - 5	I[8] + 5	ns
FA20	$t_{w(aV)}$	Pulse duration, output address gpmc_a[27:1] valid - 2nd, 3rd, and 4th accesses		D[4]		D[4]		ns
FA25	$t_{d(csnV\text{-}wenV)}$	Delay time, output chip select gpmc_csn[x][13] valid to output write enable gpmc_wen valid		E[5] - 0.2	E[5] + 2.0	E[5] - 5	E[5] + 5	ns

Copyright © 2011–2013, Texas Instruments Incorporated

Table 5-26. GPMC and NOR Flash Switching Characteristics—Asynchronous Mode (continued)

NO.	PARAMETER		OPP100		OPP50		UNIT
			MIN	MAX	MIN	MAX	
FA27	$t_{d(csnV-wenIV)}$	Delay time, output chip select gpmc_csn[x][13] valid to output write enable gpmc_wen invalid	F[6] - 0.2	F[6] + 2.0	F[6] - 5	F[6] + 5	ns
FA28	$t_{d(wenV-dV)}$	Delay time, output write enable gpmc_ wen valid to output data gpmc_ad[15:0] valid		2.0		5	ns
FA29	$t_{d(dV-csnV)}$	Delay time, output data gpmc_ad[15:0] valid to output chip select gpmc_csn[x][13] valid	J[9] - 0.2	J[9] + 2.0	J[9] - 5	J[9] + 5	ns
FA37	$t_{d(oenV-aIV)}$	Delay time, output enable gpmc_oen valid to output address gpmc_ad[15:0] phase end		2.0		5	ns

(1) For single read: A = (CSRdOffTime - CSOnTime) * (TimeParaGranularity + 1) * GPMC_FCLK[14]
For single write: A = (CSWrOffTime - CSOnTime) * (TimeParaGranularity + 1) * GPMC_FCLK[14]
For burst read: A = (CSRdOffTime - CSOnTime + (n - 1) * PageBurstAccessTime) * (TimeParaGranularity + 1) * GPMC_FCLK[14]
For burst write: A = (CSWrOffTime - CSOnTime + (n - 1) * PageBurstAccessTime) * (TimeParaGranularity + 1) * GPMC_FCLK[14]
with n being the page burst access number

(2) For reading: B = ((ADVRdOffTime - CSOnTime) * (TimeParaGranularity + 1) + 0.5 * (ADVExtraDelay - CSExtraDelay)) * GPMC_FCLK[14]
For writing: B = ((ADVWrOffTime - CSOnTime) * (TimeParaGranularity + 1) + 0.5 * (ADVExtraDelay - CSExtraDelay)) * GPMC_FCLK[14]

(3) C = ((OEOffTime - CSOnTime) * (TimeParaGranularity + 1) + 0.5 * (OEExtraDelay - CSExtraDelay)) * GPMC_FCLK[14]

(4) D = PageBurstAccessTime * (TimeParaGranularity + 1) * GPMC_FCLK[14]

(5) E = ((WEOnTime - CSOnTime) * (TimeParaGranularity + 1) + 0.5 * (WEExtraDelay - CSExtraDelay)) * GPMC_FCLK[14]

(6) F = ((WEOffTime - CSOnTime) * (TimeParaGranularity + 1) + 0.5 * (WEExtraDelay - CSExtraDelay)) * GPMC_FCLK[14]

(7) G = Cycle2CycleDelay * GPMC_FCLK[14]

(8) I = ((OEOffTime + (n - 1) * PageBurstAccessTime - CSOnTime) * (TimeParaGranularity + 1) + 0.5 * (OEExtraDelay - CSExtraDelay)) * GPMC_FCLK[14]

(9) J = (CSOnTime * (TimeParaGranularity + 1) + 0.5 * CSExtraDelay) * GPMC_FCLK[14]

(10) K = ((ADVOnTime - CSOnTime) * (TimeParaGranularity + 1) + 0.5 * (ADVExtraDelay - CSExtraDelay)) * GPMC_FCLK[14]

(11) L = ((OEOnTime - CSOnTime) * (TimeParaGranularity + 1) + 0.5 * (OEExtraDelay - CSExtraDelay)) * GPMC_FCLK[14]

(12) For single read: N = RdCycleTime * (TimeParaGranularity + 1) * GPMC_FCLK[14]
For single write: N = WrCycleTime * (TimeParaGranularity + 1) * GPMC_FCLK[14]
For burst read: N = (RdCycleTime + (n - 1) * PageBurstAccessTime) * (TimeParaGranularity + 1) * GPMC_FCLK[14]
For burst write: N = (WrCycleTime + (n - 1) * PageBurstAccessTime) * (TimeParaGranularity + 1) * GPMC_FCLK[14]

(13) In gpmc_csn[x], x is equal to 0, 1, 2, 3, 4 or 5.

(14) GPMC_FCLK is general-purpose memory controller internal functional clock period in ns.

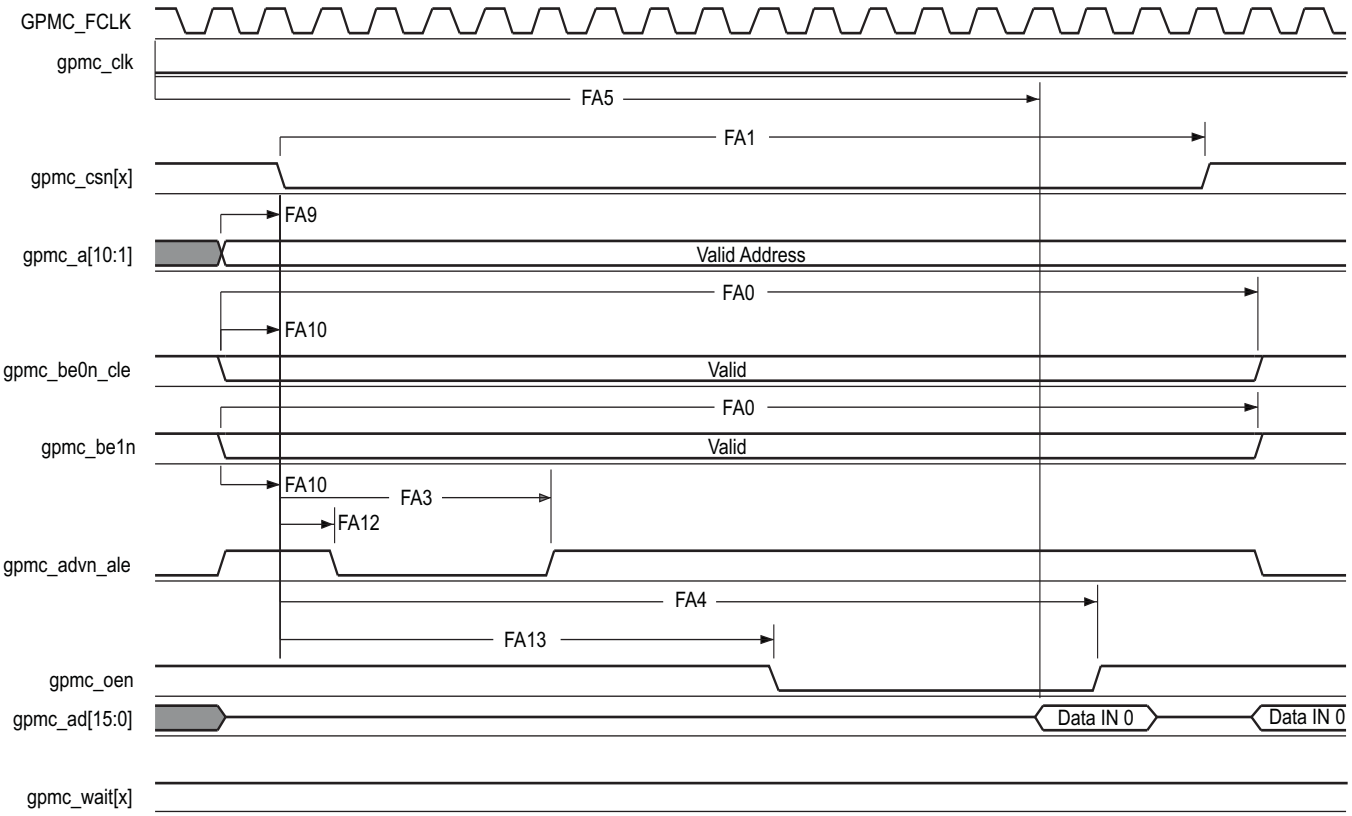

A. In gpmc_csn[x], x is equal to 0, 1, 2, 3, 4 or 5. In gpmc_wait[x], x is equal to 0 or 1.

B. FA5 parameter illustrates amount of time required to internally sample input data. It is expressed in number of GPMC functional clock cycles. From start of read cycle and after FA5 functional clock cycles, input data will be internally sampled by active functional clock edge. FA5 value must be stored inside AccessTime register bits field.

C. GPMC_FCLK is an internal clock (GPMC functional clock) not provided externally.

Figure 5-22. GPMC and NOR Flash—Asynchronous Read—Single Word

Copyright © 2011–2013, Texas Instruments Incorporated

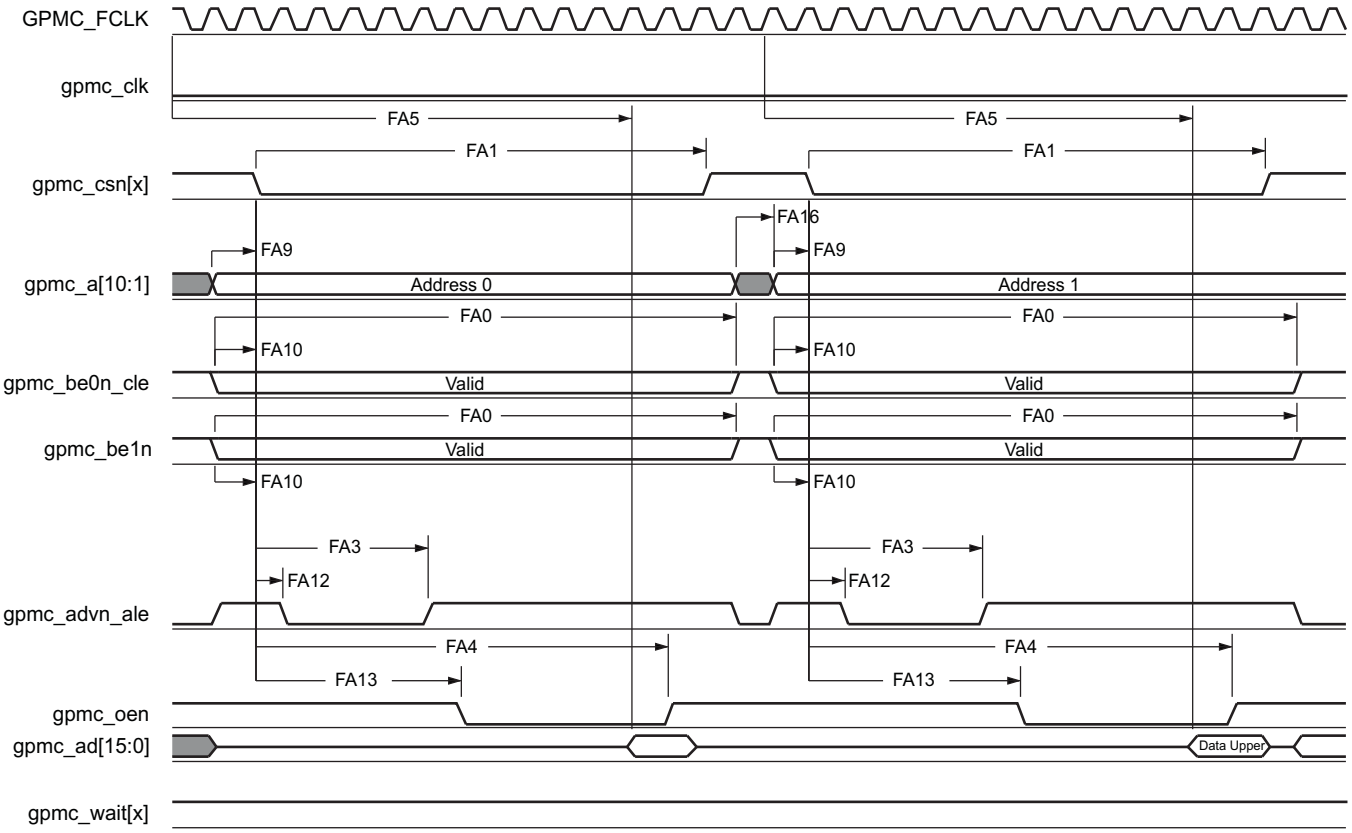

A. In gpmc_csn[x], x is equal to 0, 1, 2, 3, 4 or 5. In gpmc_wait[x], x is equal to 0 or 1.

B. FA5 parameter illustrates amount of time required to internally sample input data. It is expressed in number of GPMC functional clock cycles. From start of read cycle and after FA5 functional clock cycles, input data will be internally sampled by active functional clock edge. FA5 value must be stored inside AccessTime register bits field.

C. GPMC_FCLK is an internal clock (GPMC functional clock) not provided externally.

Figure 5-23. GPMC and NOR Flash—Asynchronous Read—32-bit

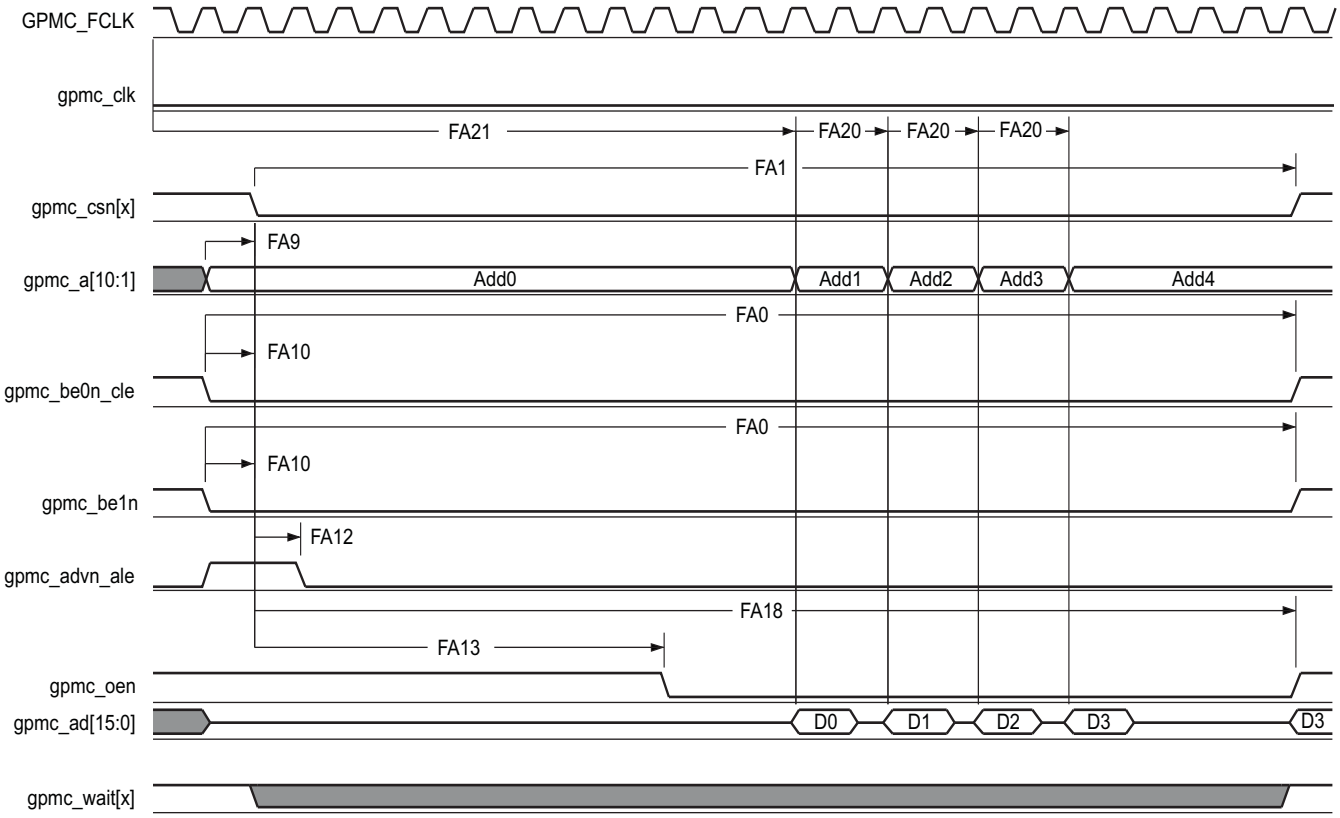

A. In gpmc_csn[x], x is equal to 0, 1, 2, 3, 4 or 5. In gpmc_wait[x], x is equal to 0 or 1.

B. FA21 parameter illustrates amount of time required to internally sample first input page data. It is expressed in number of GPMC functional clock cycles. From start of read cycle and after FA21 functional clock cycles, first input page data will be internally sampled by active functional clock edge. FA21 calculation must be stored inside AccessTime register bits field.

C. FA20 parameter illustrates amount of time required to internally sample successive input page data. It is expressed in number of GPMC functional clock cycles. After each access to input page data, next input page data will be internally sampled by active functional clock edge after FA20 functional clock cycles. FA20 is also the duration of address phases for successive input page data (excluding first input page data). FA20 value must be stored in PageBurstAccessTime register bits field.

D. GPMC_FCLK is an internal clock (GPMC functional clock) not provided externally.

Figure 5-24. GPMC and NOR Flash—Asynchronous Read—Page Mode 4x16-bit

Copyright © 2011–2013, Texas Instruments Incorporated

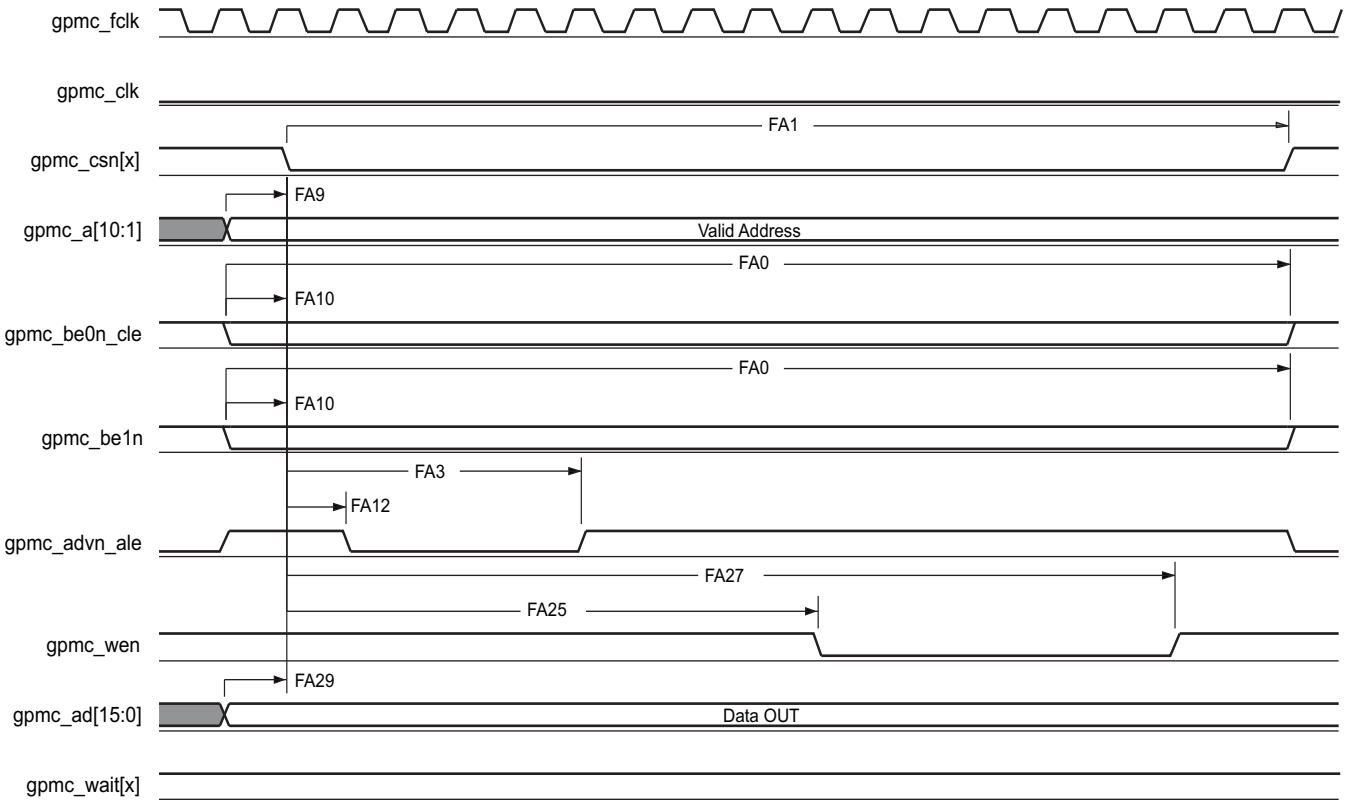

A. In gpmc_csn[x], x is equal to 0, 1, 2, 3, 4 or 5. In gpmc_wait[x], x is equal to 0 or 1.

Figure 5-25. GPMC and NOR Flash—Asynchronous Write—Single Word

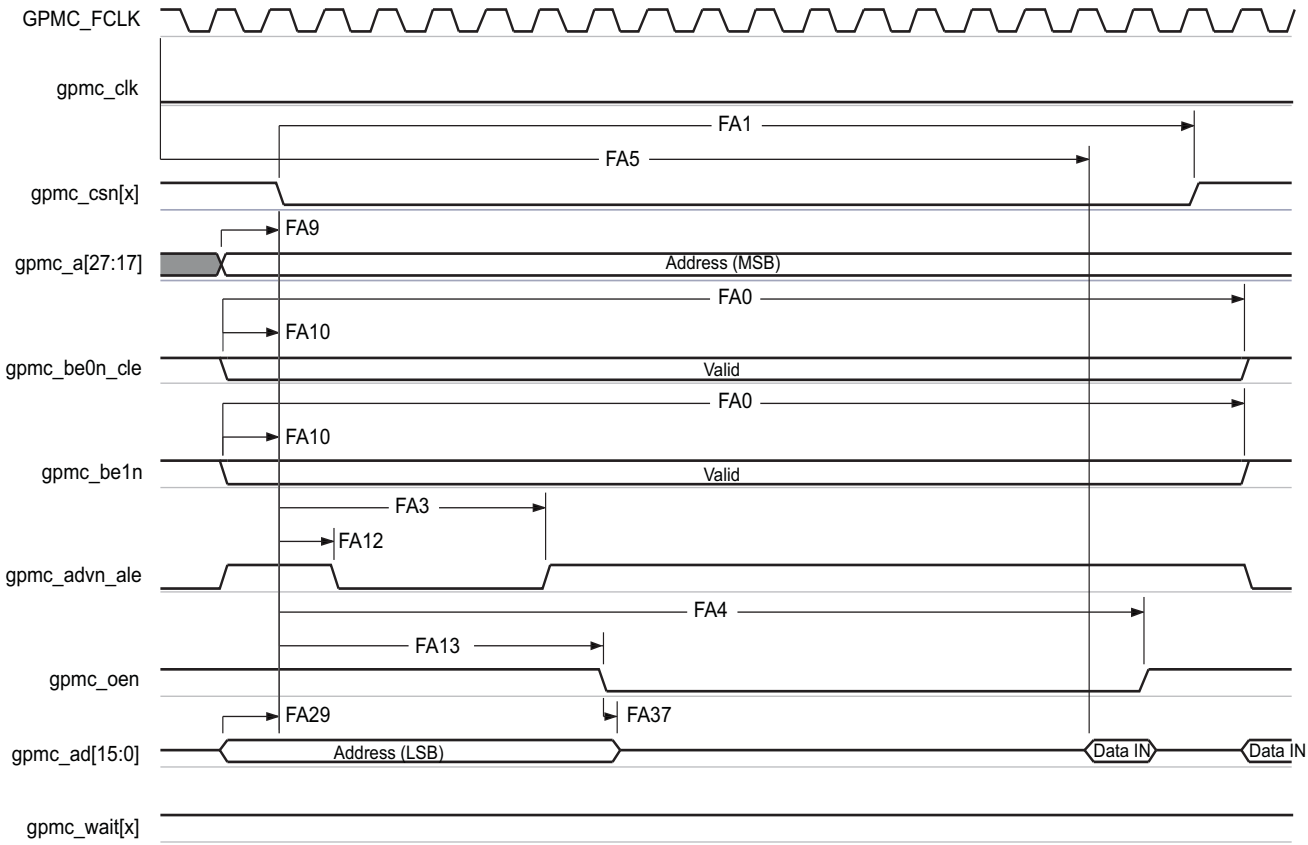

A. In gpmc_csn[x], x is equal to 0, 1, 2, 3, 4 or 5. In gpmc_wait[x], x is equal to 0 or 1.

B. FA5 parameter illustrates amount of time required to internally sample input data. It is expressed in number of GPMC functional clock cycles. From start of read cycle and after FA5 functional clock cycles, input data will be internally sampled by active functional clock edge. FA5 value must be stored inside AccessTime register bits field.

C. GPMC_FCLK is an internal clock (GPMC functional clock) not provided externally.

Figure 5-26. GPMC and Multiplexed NOR Flash—Asynchronous Read—Single Word

Copyright © 2011–2013, Texas Instruments Incorporated

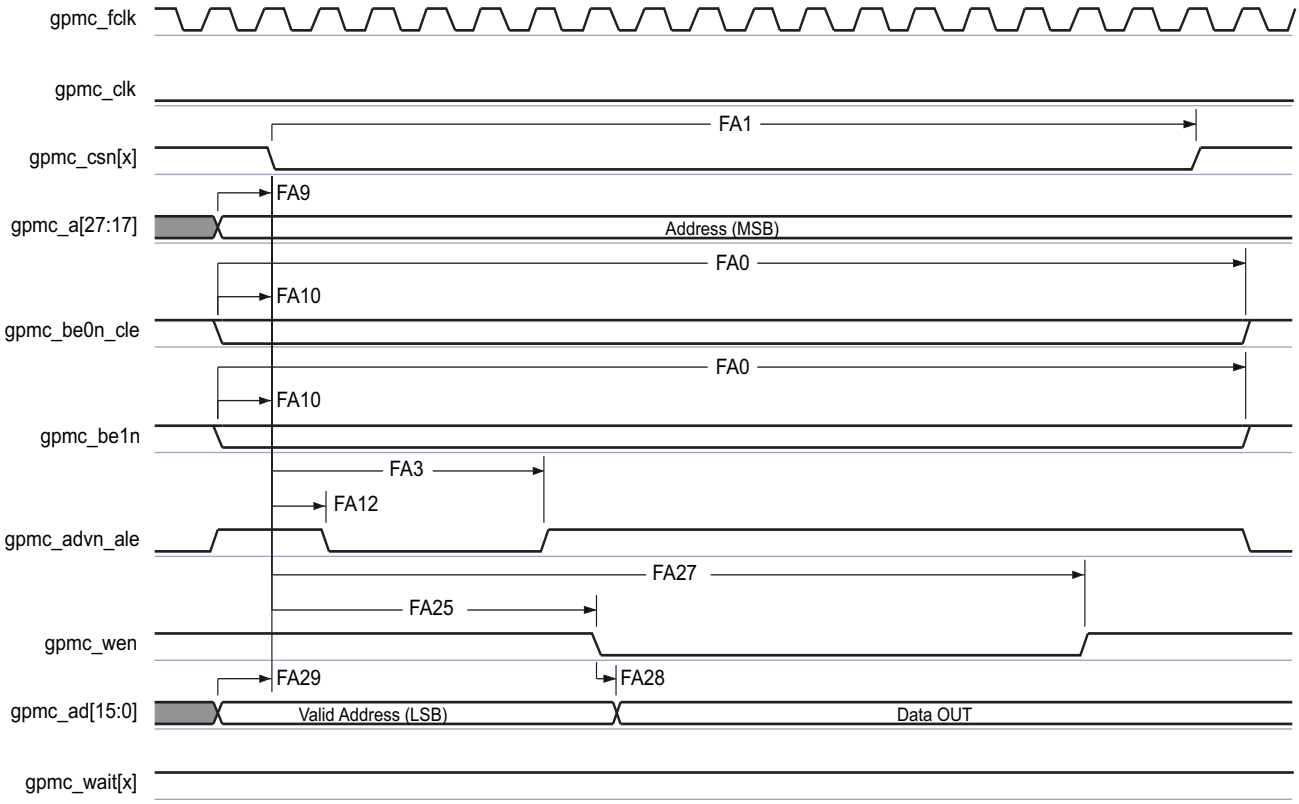

A. In gpmc_csn[x], x is equal to 0, 1, 2, 3, 4 or 5. In gpmc_wait[x], x is equal to 0 or 1.

Figure 5-27. GPMC and Multiplexed NOR Flash—Asynchronous Write—Single Word

5.6.1.3 GPMC and NAND Flash—Asynchronous Mode

Table 5-28 and Table 5-29 assume testing over the recommended operating conditions and electrical characteristic conditions below (see Figure 5-28 through Figure 5-31).

Table 5-27. GPMC and NAND Flash Timing Conditions—Asynchronous Mode

TIMING CONDITION PARAMETER		MIN	TYP	MAX	UNIT
Input Conditions					
t_R	Input signal rise time	1		5	ns
t_F	Input signal fall time	1		5	ns
Output Condition					
C_{LOAD}	Output load capacitance	3		30	pF

Table 5-28. GPMC and NAND Flash Internal Timing Parameters—Asynchronous Mode(1)(2)

NO.		OPP100		OPP50		UNIT
		MIN	MAX	MIN	MAX	
GNFI1	Delay time, output data gpmc_ad[15:0] generation from internal functional clock GPMC_FCLK(3)		6.5		6.5	ns
GNFI2	Delay time, input data gpmc_ad[15:0] capture from internal functional clock GPMC_FCLK(3)		4.0		4.0	ns
GNFI3	Delay time, output chip select gpmc_csn[x] generation from internal functional clock GPMC_FCLK(3)		6.5		6.5	ns
GNFI4	Delay time, output address valid and address latch enable gpmc_advn_ale generation from internal functional clock GPMC_FCLK(3)		6.5		6.5	ns
GNFI5	Delay time, output lower-byte enable and command latch enable gpmc_be0n_cle generation from internal functional clock GPMC_FCLK(3)		6.5		6.5	ns
GNFI6	Delay time, output enable gpmc_oen generation from internal functional clock GPMC_FCLK(3)		6.5		6.5	ns
GNFI7	Delay time, output write enable gpmc_wen generation from internal functional clock GPMC_FCLK(3)		6.5		6.5	ns
GNFI8	Skew, functional clock GPMC_FCLK(3)		100		100	ps

(1) Internal parameters table must be used to calculate data access time stored in the corresponding CS register bit field.

(2) Internal parameters are referred to the GPMC functional internal clock which is not provided externally.

(3) GPMC_FCLK is general-purpose memory controller internal functional clock.

Table 5-29. GPMC and NAND Flash Timing Requirements—Asynchronous Mode

NO.			OPP100		OPP50		UNIT
			MIN	MAX	MIN	MAX	
GNF12(1)	$t_{acc(d)}$	Access time, input data gpmc_ad[15:0]		J(2)		J(2)	ns

(1) The GNF12 parameter illustrates the amount of time required to internally sample input data. It is expressed in number of GPMC functional clock cycles. From start of the read cycle and after GNF12 functional clock cycles, input data is internally sampled by the active functional clock edge. The GNF12 value must be stored inside AccessTime register bit field.

(2) J = AccessTime * (TimeParaGranularity + 1) * GPMC_FCLK(3)

(3) GPMC_FCLK is general-purpose memory controller internal functional clock period in ns.

Copyright © 2011–2013, Texas Instruments Incorporated

Table 5-30. GPMC and NAND Flash Switching Characteristics—Asynchronous Mode

NO.	PARAMETER		OPP100		OPP50		UNIT
			MIN	MAX	MIN	MAX	
	$t_{R(d)}$	Rise time, output data gpmc_ad[15:0]		2		2	ns
	$t_{F(d)}$	Fall time, output data gpmc_ad[15:0]		2		2	ns
GNF0	$t_{w(wenV)}$	Pulse duration, output write enable gpmc_wen valid	A(1)		A(1)		ns
GNF1	$t_{d(csnV-wenV)}$	Delay time, output chip select gpmc_csn[x](13) valid to output write enable gpmc_wen valid	B(2) - 0.2	B(2) + 2.0	B(2) - 5	B(2) + 5	ns
GNF2	$t_{w(cleH-wenV)}$	Delay time, output lower-byte enable and command latch enable gpmc_be0n_cle high to output write enable gpmc_wen valid	C(3) - 0.2	C(3) + 2.0	C(3) - 5	C(3) + 5	ns
GNF3	$t_{w(wenV-dV)}$	Delay time, output data gpmc_ad[15:0] valid to output write enable gpmc_wen valid	D(4) - 0.2	D(4) + 2.0	D(4) - 5	D(4) + 5	ns
GNF4	$t_{w(wenIV-dIV)}$	Delay time, output write enable gpmc_wen invalid to output data gpmc_ad[15:0] invalid	E(5) - 0.2	E(5) + 5	E(5) - 5	E(5) + 5	ns
GNF5	$t_{w(wenIV-cleIV)}$	Delay time, output write enable gpmc_wen invalid to output lower-byte enable and command latch enable gpmc_be0n_cle invalid	F(6) - 0.2	F(6) + 2.0	F(6) - 5	F(6) + 5	ns
GNF6	$t_{w(wenIV-csnIV)}$	Delay time, output write enable gpmc_wen invalid to output chip select gpmc_csn[x](13) invalid	G(7) - 0.2	G(7) + 2.0	G(7) - 5	G(7) + 5	ns
GNF7	$t_{w(aleH-wenV)}$	Delay time, output address valid and address latch enable gpmc_advn_ale high to output write enable gpmc_wen valid	C(3) - 0.2	C(3) + 2.0	C(3) - 5	C(3) + 5	ns
GNF8	$t_{w(wenIV-aleIV)}$	Delay time, output write enable gpmc_wen invalid to output address valid and address latch enable gpmc_advn_ale invalid	F(6) - 0.2	F(6) + 2.0	F(6) - 5	F(6) + 5	ns
GNF9	$t_{c(wen)}$	Cycle time, write		H(8)		H(8)	ns
GNF10	$t_{d(csnV-oenV)}$	Delay time, output chip select gpmc_csn[x](13) valid to output enable gpmc_oen valid	I(9) - 0.2	I(9) + 2.0	I(9) - 5	I(9) + 5	ns
GNF13	$t_{w(oenV)}$	Pulse duration, output enable gpmc_oen valid		K(10)		K(10)	ns
GNF14	$t_{c(oen)}$	Cycle time, read	L(11)		L(11)		ns
GNF15	$t_{w(oenIV-csnIV)}$	Delay time, output enable gpmc_oen invalid to output chip select gpmc_csn[x](13) invalid	M(12) - 0.2	M(12) + 2.0	M(12) - 5	M(12) + 5	ns

(1) A = (WEOffTime - WEOnTime) * (TimeParaGranularity + 1) * GPMC_FCLK(14)
(2) B = ((WEOnTime - CSOnTime) * (TimeParaGranularity + 1) + 0.5 * (WEExtraDelay - CSExtraDelay)) * GPMC_FCLK(14)
(3) C = ((WEOnTime - ADVOnTime) * (TimeParaGranularity + 1) + 0.5 * (WEExtraDelay - ADVExtraDelay)) * GPMC_FCLK(14)
(4) D = (WEOnTime * (TimeParaGranularity + 1) + 0.5 * WEExtraDelay) * GPMC_FCLK(14)
(5) E = ((WrCycleTime - WEOffTime) * (TimeParaGranularity + 1) - 0.5 * WEExtraDelay) * GPMC_FCLK(14)
(6) F = ((ADVWrOffTime - WEOffTime) * (TimeParaGranularity + 1) + 0.5 * (ADVExtraDelay - WEExtraDelay)) * GPMC_FCLK(14)
(7) G = ((CSWrOffTime - WEOffTime) * (TimeParaGranularity + 1) + 0.5 * (CSExtraDelay - WEExtraDelay)) * GPMC_FCLK(14)
(8) H = WrCycleTime * (1 + TimeParaGranularity) * GPMC_FCLK(14)
(9) I = ((OEOnTime - CSOnTime) * (TimeParaGranularity + 1) + 0.5 * (OEExtraDelay - CSExtraDelay)) * GPMC_FCLK(14)
(10) K = (OEOffTime - OEOnTime) * (1 + TimeParaGranularity) * GPMC_FCLK(14)
(11) L = RdCycleTime * (1 + TimeParaGranularity) * GPMC_FCLK(14)
(12) M = ((CSRdOffTime - OEOffTime) * (TimeParaGranularity + 1) + 0.5 * (CSExtraDelay - OEExtraDelay)) * GPMC_FCLK(14)
(13) In gpmc_csn[x], x is equal to 0, 1, 2, 3, 4 or 5.
(14) GPMC_FCLK is general-purpose memory controller internal functional clock period in ns.

Copyright © 2011–2013, Texas Instruments Incorporated

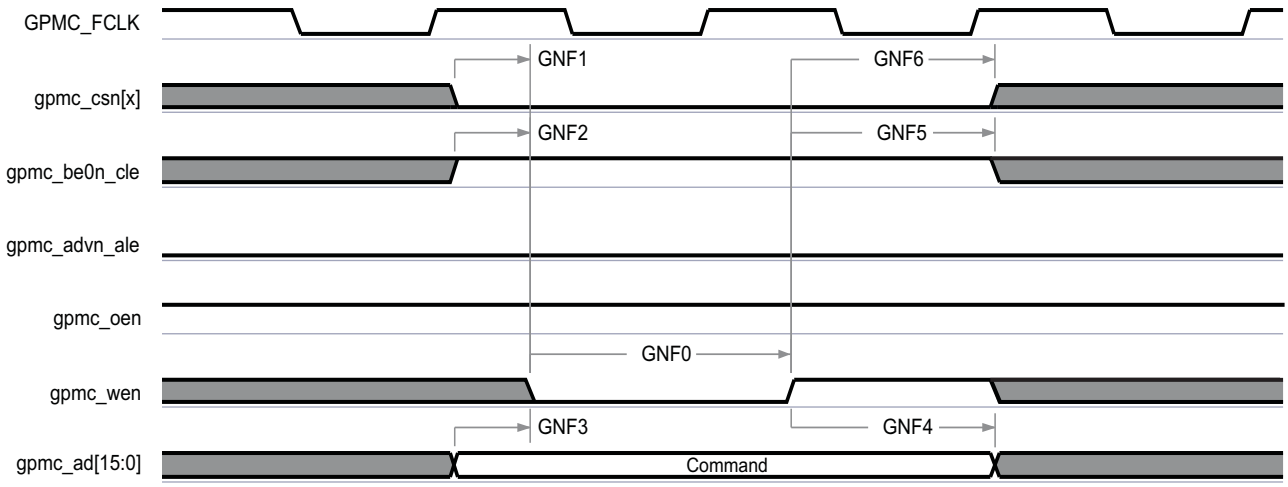

(1) In gpmc_csn[x], x is equal to 0, 1, 2, 3, 4 or 5.

Figure 5-28. GPMC and NAND Flash—Command Latch Cycle

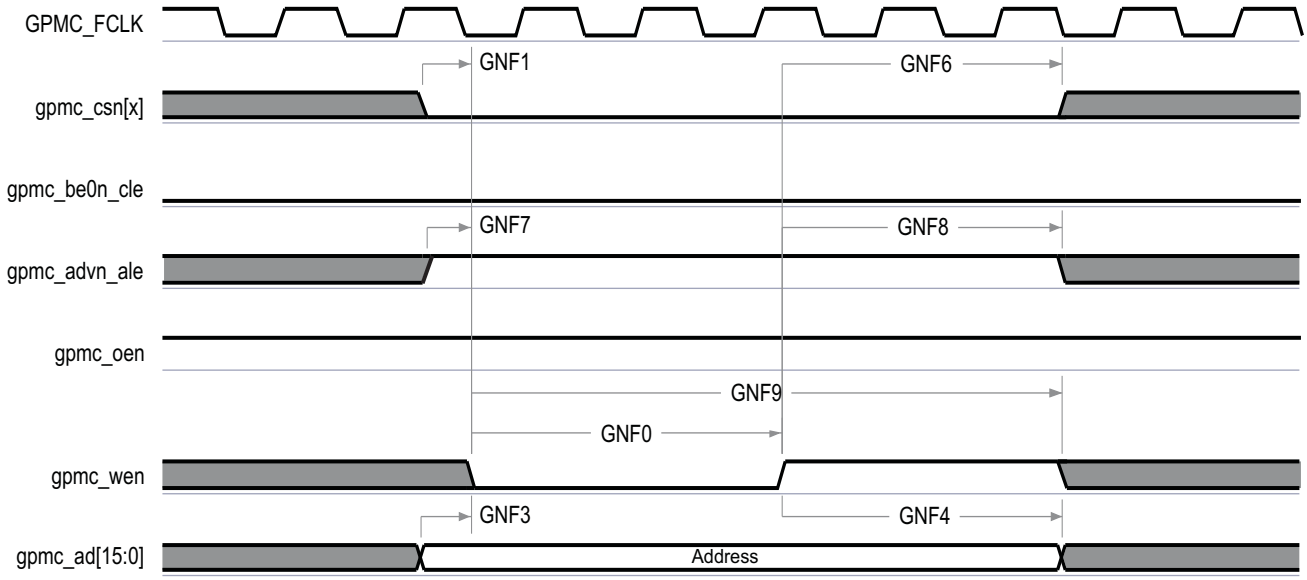

(1) In gpmc_csn[x], x is equal to 0, 1, 2, 3, 4 or 5.

Figure 5-29. GPMC and NAND Flash—Address Latch Cycle

Copyright © 2011–2013, Texas Instruments Incorporated

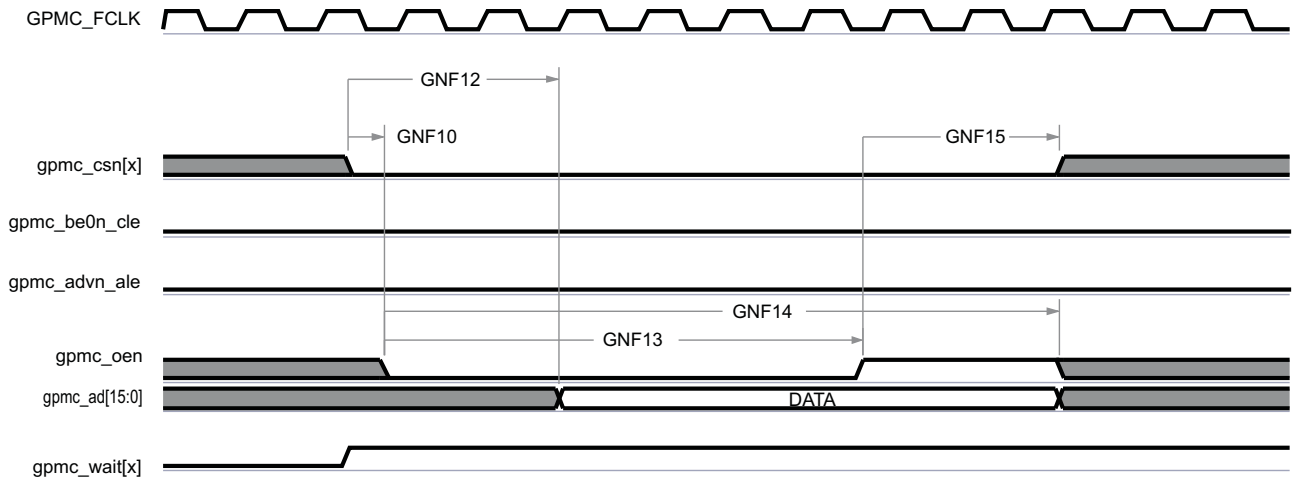

(1) GNF12 parameter illustrates amount of time required to internally sample input data. It is expressed in number of GPMC functional clock cycles. From start of read cycle and after GNF12 functional clock cycles, input data will be internally sampled by active functional clock edge. GNF12 value must be stored inside AccessTime register bits field.

(2) GPMC_FCLK is an internal clock (GPMC functional clock) not provided externally.

(3) In gpmc_csn[x], x is equal to 0, 1, 2, 3, 4 or 5. In gpmc_wait[x], x is equal to 0 or 1.

Figure 5-30. GPMC and NAND Flash—Data Read Cycle

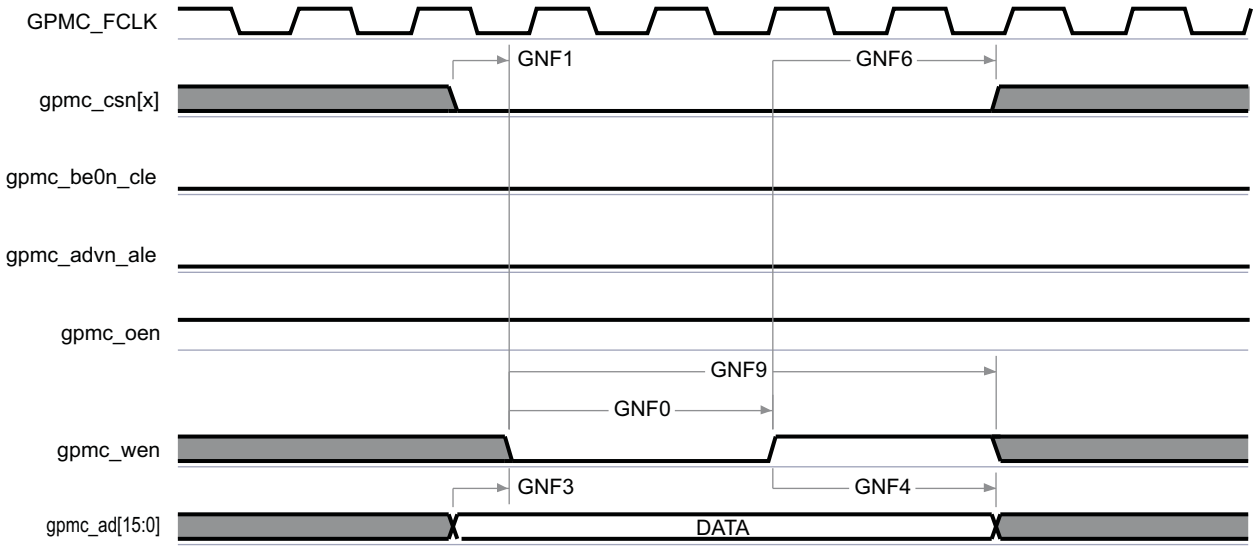

(1) In gpmc_csn[x], x is equal to 0, 1, 2, 3, 4 or 5.

Figure 5-31. GPMC and NAND Flash—Data Write Cycle

5.6.2 mDDR(LPDDR), DDR2, DDR3, DDR3L Memory Interface

The device has a dedicated interface to mDDR(LPDDR),DDR2, DDR3, and DDR3L SDRAM. It supports JEDEC standard compliant mDDR(LPDDR), DDR2, DDR3, and DDR3L SDRAM devices with a 16-bit data path to external SDRAM memory.

For more details on the mDDR(LPDDR), DDR2, DDR3, and DDR3L memory interface, see the EMIF section of the *AM335x Sitara ARM Cortex A-8 Microprocessors (MPUs) Technical Reference Manual* (literature number SPRUH73).

5.6.2.1 mDDR(LPDDR) Routing Guidelines

It is common to find industry references to mobile double data rate (mDDR) when discussing JEDEC defined low-power double-data rate (LPDDR) memory devices. The following guidelines use LPDDR when referencing JEDEC defined low-power double-data rate memory devices.

5.6.2.1.1 Board Designs

TI only supports board designs that follow the guidelines outlined in this document. The switching characteristics and the timing diagram for the LPDDR memory interface are shown in Table 5-31 and Figure 5-32.

Table 5-31. Switching Characteristics for LPDDR Memory Interface

NO.	PARAMETER		MIN	MAX	UNIT
1	$t_{c(DDR_CK)}$ $t_{c(DDR_CKn)}$	Cycle time, DDR_CK and DDR_CKn	5	(1)	ns

(1) The JEDEC JESD209B specification only defines the maximum clock period for LPDDR333 and faster speed bin LPDDR memory devices. To determine the maximum clock period, see the respective LPDDR memory data sheet.

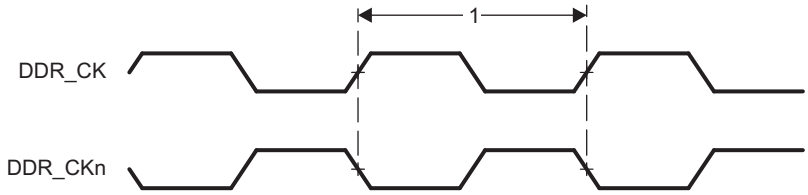

Figure 5-32. LPDDR Memory Interface Clock Timing

5.6.2.1.2 LPDDR Interface

This section provides the timing specification for the LPDDR interface as a PCB design and manufacturing specification. The design rules constrain PCB trace length, PCB trace skew, signal integrity, cross-talk, and signal timing. These rules, when followed, result in a reliable LPDDR memory system without the need for a complex timing closure process. For more information regarding the guidelines for using this LPDDR specification, see the *Understanding TI's PCB Routing Rule-Based DDR Timing Specification* application report (literature number SPRAAV0). This application report provides generic guidelines and approach. All the specifications provided in the data manual take precedence over the generic guidelines and must be adhered to for a reliable LPDDR interface operation.

5.6.2.1.2.1 LPDDR Interface Schematic

Figure 5-33 shows the schematic connections for 16-bit interface on AM335x device using one x16 LPDDR device. The AM335x LPDDR memory interface only supports 16-bit wide mode of operation. The AM335x° device can only source one load connected to the DQS[x] and DQ[x] net class signals and one load connected to the CK and ADDR_CTRL net class signals. For more information related to net classes, see Section 5.6.2.1.2.8.

Copyright © 2011–2013, Texas Instruments Incorporated

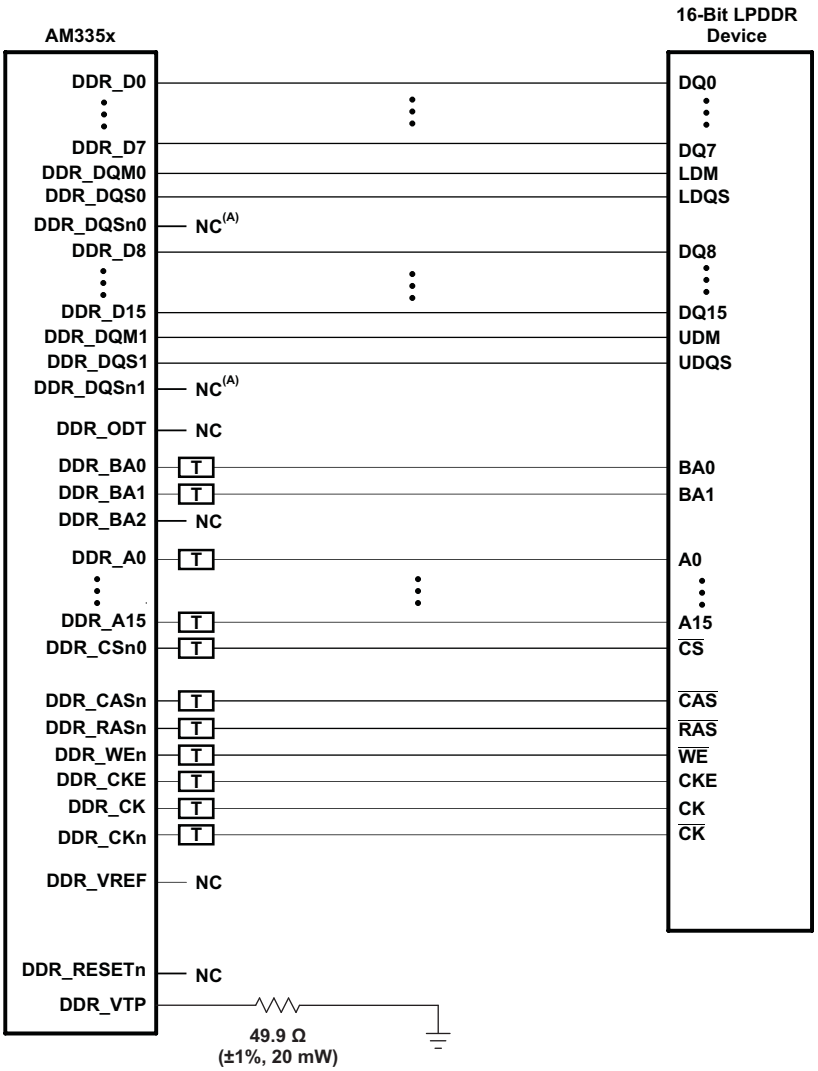

A. Enable internal weak pulldown on these pins. For details, see the EMIF section of the *AM335x Sitara ARM Cortex A-8 Microprocessors (MPUs) Technical Reference Manual* (literature number SPRUH73).

B. For all the termination requirements, see Section 5.6.2.1.2.9.

Figure 5-33. 16-Bit LPDDR Interface Using One 16-Bit LPDDR Device

5.6.2.1.2.2 Compatible JEDEC LPDDR Devices

Table 5-32 shows the parameters of the JEDEC LPDDR devices that are compatible with this interface. Generally, the LPDDR interface is compatible with x16 LPDDR400 speed grade LPDDR devices.

Table 5-32. Compatible JEDEC LPDDR Devices (Per Interface)(1)

NO.	PARAMETER	MIN	MAX	UNIT
1	JEDEC LPDDR device speed grade	LPDDR400		
2	JEDEC LPDDR device bit width	x16	x16	Bits
3	JEDEC LPDDR device count		1	Devices
4	JEDEC LPDDR device terminal count		60	Terminals

(1) If the LPDDR interface is operated with a clock frequency less than 200 MHz, lower-speed grade LPDDR devices may be used if the minimum clock period specified for the LPDDR device is less than or equal to the minimum clock period selected for the AM335x LPDDR interface.

5.6.2.1.2.3 PCB Stackup

The minimum stackup required for routing the AM335x device is a four-layer stackup as shown in Table 5-33. Additional layers may be added to the PCB stackup to accommodate other circuitry, enhance signal integrity and electromagnetic interference performance, or to reduce the size of the PCB footprint.

Table 5-33. Minimum PCB Stackup(1)

LAYER	TYPE	DESCRIPTION
1	Signal	Top signal routing
2	Plane	Ground
3	Plane	Split Power Plane
4	Signal	Bottom signal routing

(1) All signals that have critical signal integrity requirements should be routed first on layer 1. It may not be possible to route all of these signals on layer 1 which requires some to be routed on layer 4. When this is done, the signal routes on layer 4 should not cross splits in the power plane.

Copyright © 2011–2013, Texas Instruments Incorporated

Complete stackup specifications are provided in Table 5-34.

Table 5-34. PCB Stackup Specifications[(1)]

NO.	PARAMETER		MIN	TYP	MAX	UNIT
1	PCB routing and plane layers		4			
2	Signal routing layers		2			
3	Full ground layers under LPDDR routing region		1			
4	Number of ground plane cuts allowed within LPDDR routing region				0	
5	Full VDDS_DDR power reference layers under LPDDR routing region		1			
6	Number of layers between LPDDR routing layer and reference ground plane				0	
7	PCB routing feature size			4		mils
8	PCB trace width, w			4		mils
9	PCB BGA escape via pad size[(2)]			18	20	mils
10	PCB BGA escape via hole size[(2)]			10		mils
11	AM335x BGA pad size	ZCZ package		0.5		mm
		ZCE package		0.4		
13	Single-ended impedance, Zo[(3)]		50		75	ohms
14	Impedance control[(4)(5)]		Zo-5	Zo	Zo+5	ohms

(1) For the LPDDR device BGA pad size, see the LPDDR device manufacturer documentation.

(2) A 20-10 via may be used if enough power routing resources are available. An 18-10 via allows for more flexible power routing to the AM335x device.

(3) Zo is the nominal singled-ended impedance selected for the PCB.

(4) This parameter specifies the AC characteristic impedance tolerance for each segment of a PCB signal trace relative to the chosen Zo defined by the single-ended impedance parameter.

(5) Tighter impedance control is required to ensure flight time skew is minimal.

Copyright © 2011–2013, Texas Instruments Incorporated

5.6.2.1.2.4 Placement

Figure 5-34 shows the required placement for the LPDDR devices. The dimensions for this figure are defined in Table 5-35. The placement does not restrict the side of the PCB on which the devices are mounted. The ultimate purpose of the placement is to limit the maximum trace lengths and allow for proper routing space. For single-memory LPDDR systems, the second LPDDR device is omitted from the placement.

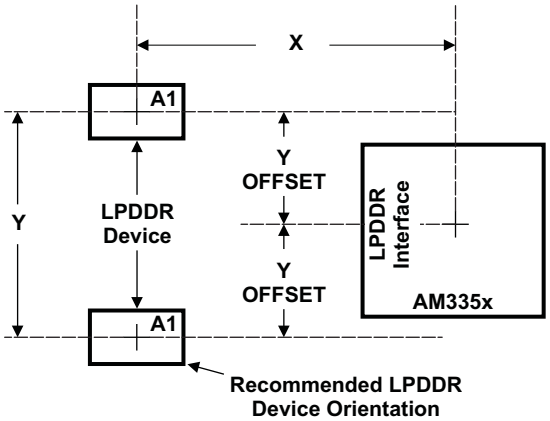

Figure 5-34. AM335x Device and LPDDR Device Placement

Table 5-35. Placement Specifications[(1)]

NO.	PARAMETER	MIN	MAX	UNIT
1	X[(2)(3)]		1750	mils
2	Y[(2)(3)]		1280	mils
3	Y Offset[(2)(3)(4)]		650	mils
4	Clearance from non-LPDDR signal to LPDDR keepout region[(5)(6)]	4		w

(1) LPDDR keepout region to encompass entire LPDDR routing area.
(2) For dimension definitions, see Figure 5-34.
(3) Measurements from center of AM335x device to center of LPDDR device.
(4) For single-memory systems, it is recommended that Y offset be as small as possible.
(5) w is defined as the signal trace width.
(6) Non-LPDDR signals allowed within LPDDR keepout region provided they are separated from LPDDR routing layers by a ground plane.

Copyright © 2011–2013, Texas Instruments Incorporated

5.6.2.1.2.5 LPDDR Keepout Region

The region of the PCB used for the LPDDR circuitry must be isolated from other signals. The LPDDR keepout region is defined for this purpose and is shown in Figure 5-35. This region should encompass all LPDDR circuitry and the region size varies with component placement and LPDDR routing. Additional clearances required for the keepout region are shown in Table 5-35. Non-LPDDR signals should not be routed on the same signal layer as LPDDR signals within the LPDDR keepout region. Non-LPDDR signals may be routed in the region provided they are routed on layers separated from LPDDR signal layers by a ground layer. No breaks should be allowed in the reference ground or VDDS_DDR power plane in this region. In addition, the VDDS_DDR power plane should cover the entire keepout region.

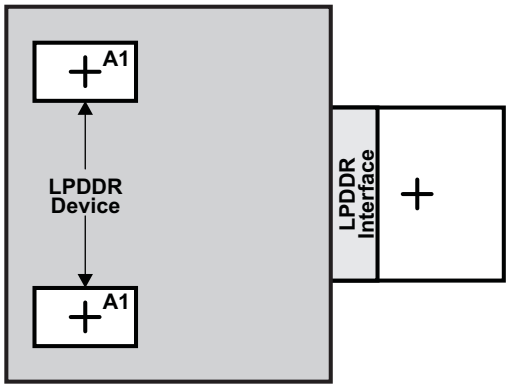

Figure 5-35. LPDDR Keepout Region

5.6.2.1.2.6 Bulk Bypass Capacitors

Bulk bypass capacitors are required for moderate speed bypassing of the LPDDR and other circuitry. Table 5-36 contains the minimum numbers and capacitance required for the bulk bypass capacitors. Note that this table only covers the bypass needs of the AM335x LPDDR interface and LPDDR devices. Additional bulk bypass capacitance may be needed for other circuitry.

Table 5-36. Bulk Bypass Capacitors(1)

NO.	PARAMETER	MIN	MAX	UNIT
1	AM335x VDDS_DDR bulk bypass capacitor count	1		Devices
2	AM335x VDDS_DDR bulk bypass total capacitance	10		µF
3	LPDDR#1 bulk bypass capacitor count	1		Devices
4	LPDDR#1 bulk bypass total capacitance	10		µF
5	LPDDR#2 bulk bypass capacitor count(2)	1		Devices
6	LPDDR#2 bulk bypass total capacitance(2)	10		µF

(1) These devices should be placed near the device they are bypassing, but preference should be given to the placement of the high-speed (HS) bypass capacitors.

(2) Only used when two LPDDR devices are used.

5.6.2.1.2.7 High-Speed Bypass Capacitors

High-speed (HS) bypass capacitors are critical for proper LPDDR interface operation. It is particularly important to minimize the parasitic series inductance of the HS bypass capacitors, AM335x device LPDDR power, and AM335x device LPDDR ground connections. Table 5-37 contains the specification for the HS bypass capacitors as well as for the power connections on the PCB.

Table 5-37. High-Speed Bypass Capacitors

NO.	PARAMETER	MIN	MAX	UNIT
1	HS bypass capacitor package size(1)		0402	10 mils
2	Distance from HS bypass capacitor to device being bypassed		250	mils
3	Number of connection vias for each HS bypass capacitor(2)	2		Vias
4	Trace length from bypass capacitor contact to connection via		30	mils
5	Number of connection vias for each AM335x VDDS_DDR and VSS terminal	1		Vias
6	Trace length from AM335x VDDS_DDR and VSS terminal to connection via		35	mils
7	Number of connection vias for each LPDDR device power and ground terminal	1		Vias
8	Trace length from LPDDR device power and ground terminal to connection via		35	mils
9	AM335x VDDS_DDR HS bypass capacitor count(3)	10		Devices
10	AM335x VDDS_DDR HS bypass capacitor total capacitance	0.6		µF
11	LPDDR device HS bypass capacitor count(3)(4)	8		Devices
12	LPDDR device HS bypass capacitor total capacitance(4)	0.4		µF

(1) LxW, 10-mil units; for example, a 0402 is a 40x20-mil surface-mount capacitor.
(2) An additional HS bypass capacitor can share the connection vias only if it is mounted on the opposite side of the board.
(3) These devices should be placed as close as possible to the device being bypassed.
(4) Per LPDDR device.

5.6.2.1.2.8 Net Classes

Table 5-38 lists the clock net classes for the LPDDR interface. Table 5-39 lists the signal net classes, and associated clock net classes, for the signals in the LPDDR interface. These net classes are used for the termination and routing rules that follow.

Table 5-38. Clock Net Class Definitions

CLOCK NET CLASS	AM335x PIN NAMES
CK	DDR_CK and DDR_CKn
DQS0	DDR_DQS0
DQS1	DDR_DQS1

Table 5-39. Signal Net Class Definitions

SIGNAL NET CLASS	ASSOCIATED CLOCK NET CLASS	AM335x PIN NAMES
ADDR_CTRL	CK	DDR_BA[1:0], DDR_A[15:0], DDR_CSn0, DDR_CASn, DDR_RASn, DDR_WEn, DDR_CKE
DQ0	DQS0	DDR_D[7:0], DDR_DQM0
DQ1	DQS1	DDR_D[15:8], DDR_DQM1

Copyright © 2011–2013, Texas Instruments Incorporated

5.6.2.1.2.9 LPDDR Signal Termination

There is no specific need for adding terminations on the LPDDR interface. However, system designers may evaluate the need for serial terminators for EMI and overshoot reduction. Placement of serial terminations for DQS[x] and DQ[x] net class signals should be determined based on PCB analysis. Placement of serial terminations for ADDR_CTRL net class signals should be close to the AM335x device. Table 5-40 shows the specifications for the serial terminators in such cases.

Table 5-40. LPDDR Signal Terminations

No.	Parameter	Min	Typ	Max	Unit
1	CK net class(1)	0	22	Zo(2)	ohms
2	ADDR_CTRL net class(1)(3)(4)	0	22	Zo(2)	ohms
3	DQS0, DQS1, DQ0, and DQ1 net classes	0	22	Zo(2)	ohms

(1) Only series termination is permitted.

(2) Zo is the LPDDR PCB trace characteristic impedance.

(3) Series termination values larger than typical only recommended to address EMI issues.

(4) Series termination values should be uniform across net class.

5.6.2.1.3 LPDDR CK and ADDR_CTRL Routing

Figure 5-36 shows the topology of the routing for the CK and ADDR_CTRL net classes. The length of signal path AB and AC should be minimized with emphasis to minimize lengths C and D such that length A is the majority of the total length of signal path AB and AC.

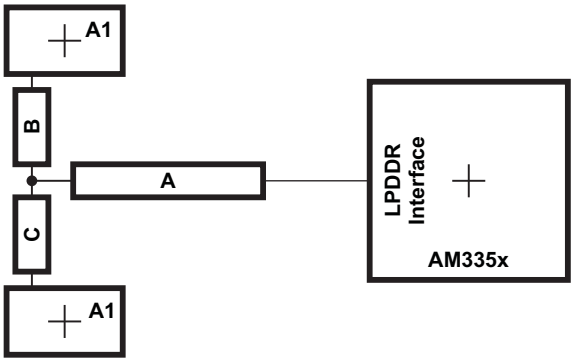

Figure 5-36. CK and ADDR_CTRL Routing and Topology

Table 5-41. CK and ADDR_CTRL Routing Specification(1)(2)

NO.	PARAMETER	MIN	TYP	MAX	UNIT
1	Center-to-center CK spacing			2w	
2	CK differential pair skew length mismatch(2)(3)			25	mils
3	CK B-to-CK C skew length mismatch			25	mils
4	Center-to-center CK to other LPDDR trace spacing(4)	4w			
5	CK and ADDR_CTRL nominal trace length(5)	CACLM-50	CACLM	CACLM+50	mils
6	ADDR_CTRL-to-CK skew length mismatch			100	mils
7	ADDR_CTRL-to-ADDR_CTRL skew length mismatch			100	mils
8	Center-to-center ADDR_CTRL to other LPDDR trace spacing(4)	4w			
9	Center-to-center ADDR_CTRL to other ADDR_CTRL trace spacing(4)	3w			
10	ADDR_CTRL A-to-B and ADDR_CTRL A-to-C skew length mismatch(2)			100	mils
11	ADDR_CTRL B-to-C skew length mismatch			100	mils

(1) CK represents the clock net class, and ADDR_CTRL represents the address and control signal net class.

(2) Series terminator, if used, should be located closest to the AM335x device.

(3) Differential impedance should be Zo x 2, where Zo is the single-ended impedance defined in Table 5-34.

(4) Center-to-center spacing is allowed to fall to minimum (w) for up to 500 mils of routed length to accommodate BGA escape and routing congestion.

(5) CACLM is the longest Manhattan distance of the CK and ADDR_CTRL net classes.

Copyright © 2011–2013, Texas Instruments Incorporated

Figure 5-37 shows the topology and routing for the DQS[x] and DQ[x] net classes; the routes are point to point. Skew matching across bytes is not needed nor recommended.

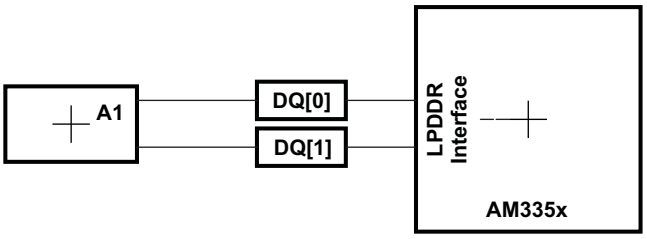

Figure 5-37. DQS[x] and DQ[x] Routing and Topology

Table 5-42. DQS[x] and DQ[x] Routing Specification(1)

NO.	PARAMETER	MIN	TYP	MAX	UNIT
1	Center-to-center DQS[x] spacing			2w	
2	Center-to-center DDR_DQS[x] to other LPDDR trace spacing(2)	4w			
3	DQS[x] and DQ[x] nominal trace length(3)	DQLM-50	DQLM	DQLM+50	mils
4	DQ[x]-to-DQS[x] skew length mismatch(3)			100	mils
5	DQ[x]-to-DQ[x] skew length mismatch(3)			100	mils
6	Center-to-center DQ[x] to other LPDDR trace spacing(2)(4)	4w			
7	Center-to-center DQ[x] to other DQ[x] trace spacing(2)(5)	3w			

(1) DQS[x] represents the DQS0 and DQS1 clock net classes, and DQ[x] represents the DQ0 and DQ1 signal net classes.

(2) Center-to-center spacing is allowed to fall to minimum (w) for up to 500 mils of routed length to accommodate BGA escape and routing congestion.

(3) There is no requirement for skew matching between data bytes; that is, from net classes DQS0 and DQ0 to net classes DQS1 and DQ1.

(4) Signals from one DQ net class should be considered other LPDDR traces to another DQ net class.

(5) DQLM is the longest Manhattan distance of each of the DQS[x] and DQ[x] net classes.

5.6.2.2 DDR2 Routing Guidelines

5.6.2.2.1 Board Designs

TI only supports board designs that follow the guidelines outlined in this document. The switching characteristics and the timing diagram for the DDR2 memory interface are shown in Table 5-43 and Figure 5-38.

Table 5-43. Switching Characteristics for DDR2 Memory Interface

NO.	PARAMETER		MIN	MAX	UNIT
1	$t_{c(DDR_CK)}$ $t_{c(DDR_CKn)}$	Cycle time, DDR_CK and DDR_CKn	3.75	8[(1)]	ns

(1) The JEDEC JESD79-2F specification defines the maximum clock period of 8 ns for all standard-speed bin DDR2 memory devices. Therefore, all standard-speed bin DDR2 memory devices are required to operate at 125 MHz.

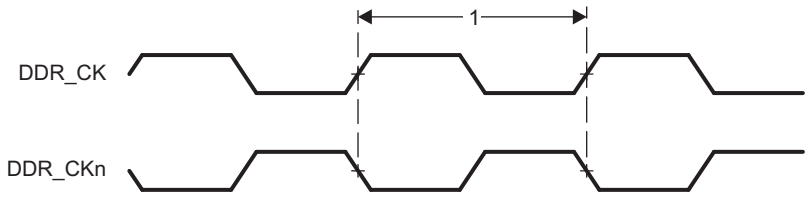

Figure 5-38. DDR2 Memory Interface Clock Timing

5.6.2.2.2 DDR2 Interface

This section provides the timing specification for the DDR2 interface as a PCB design and manufacturing specification. The design rules constrain PCB trace length, PCB trace skew, signal integrity, cross-talk, and signal timing. These rules, when followed, result in a reliable DDR2 memory system without the need for a complex timing closure process. For more information regarding the guidelines for using this DDR2 specification, see the *Understanding TI's PCB Routing Rule-Based DDR Timing Specification* application report (literature number SPRAAV0). This application report provides generic guidelines and approach. All the specifications provided in the data manual take precedence over the generic guidelines and must be adhered to for a reliable DDR2 interface operation.

5.6.2.2.2.1 DDR2 Interface Schematic

Figure 5-39 shows the schematic connections for 16-bit interface on AM335x device using one x16 DDR2 device and Figure 5-40 shows the schematic connections for 16-bit interface on AM335x using two x8 DDR2 devices. The AM335x DDR2 memory interface only supports 16-bit wide mode of operation. The AM335x device can only source one load connected to the DQS[x] and DQ[x] net class signals and two loads connected to the CK and ADDR_CTRL net class signals. For more information related to net classes, see Section 5.6.2.2.2.8.

Copyright © 2011–2013, Texas Instruments Incorporated

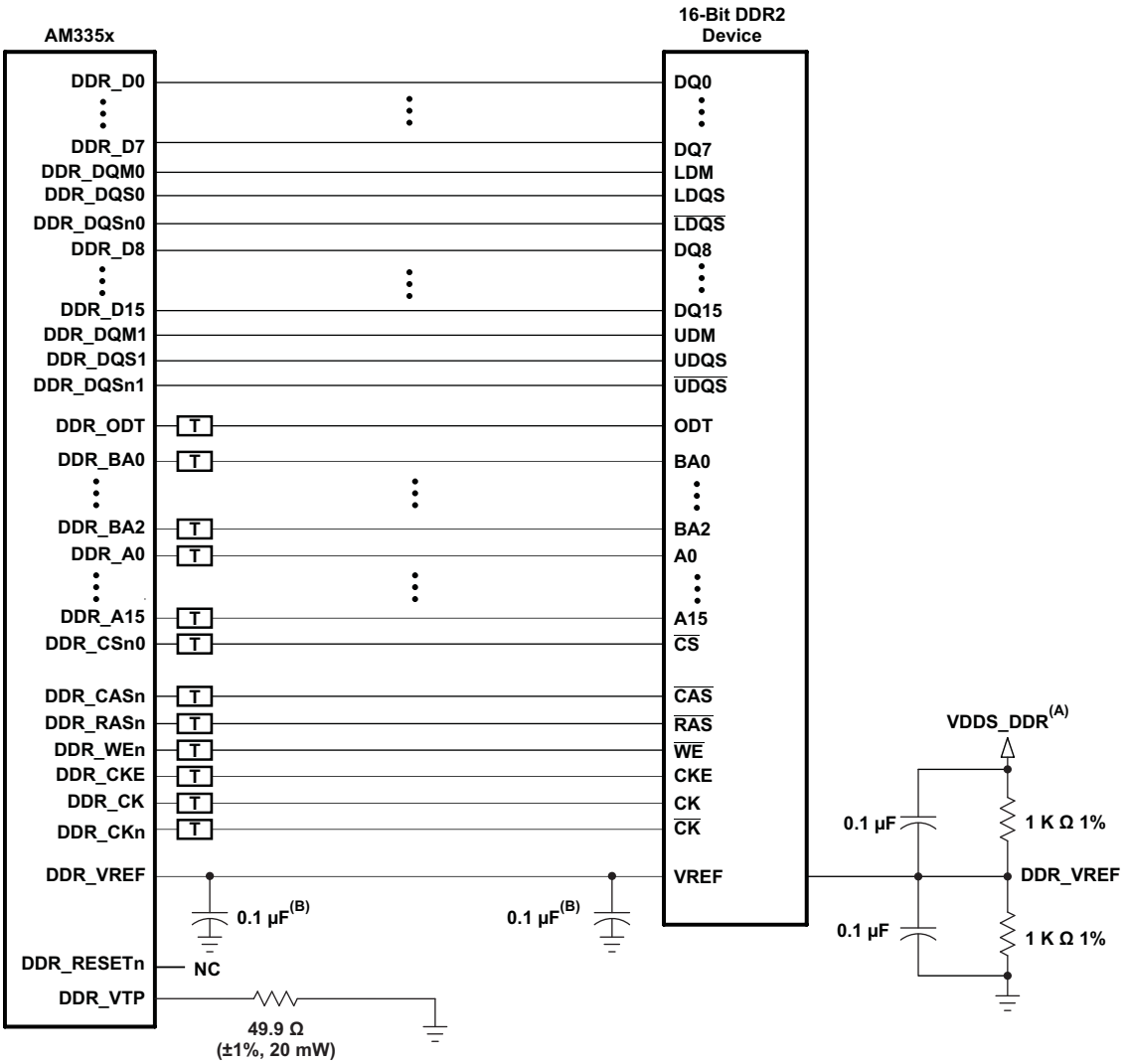

A. VDDS_DDR is the power supply for the DDR2 memories and the AM335x DDR2 interface.
B. One of these capacitors can be eliminated if the divider and its capacitors are placed near a DDR_VREF pin.
C. For all the termination requirements, see Section 5.6.2.2.2.9.

Figure 5-39. 16-Bit DDR2 Interface Using One 16-Bit DDR2 Device

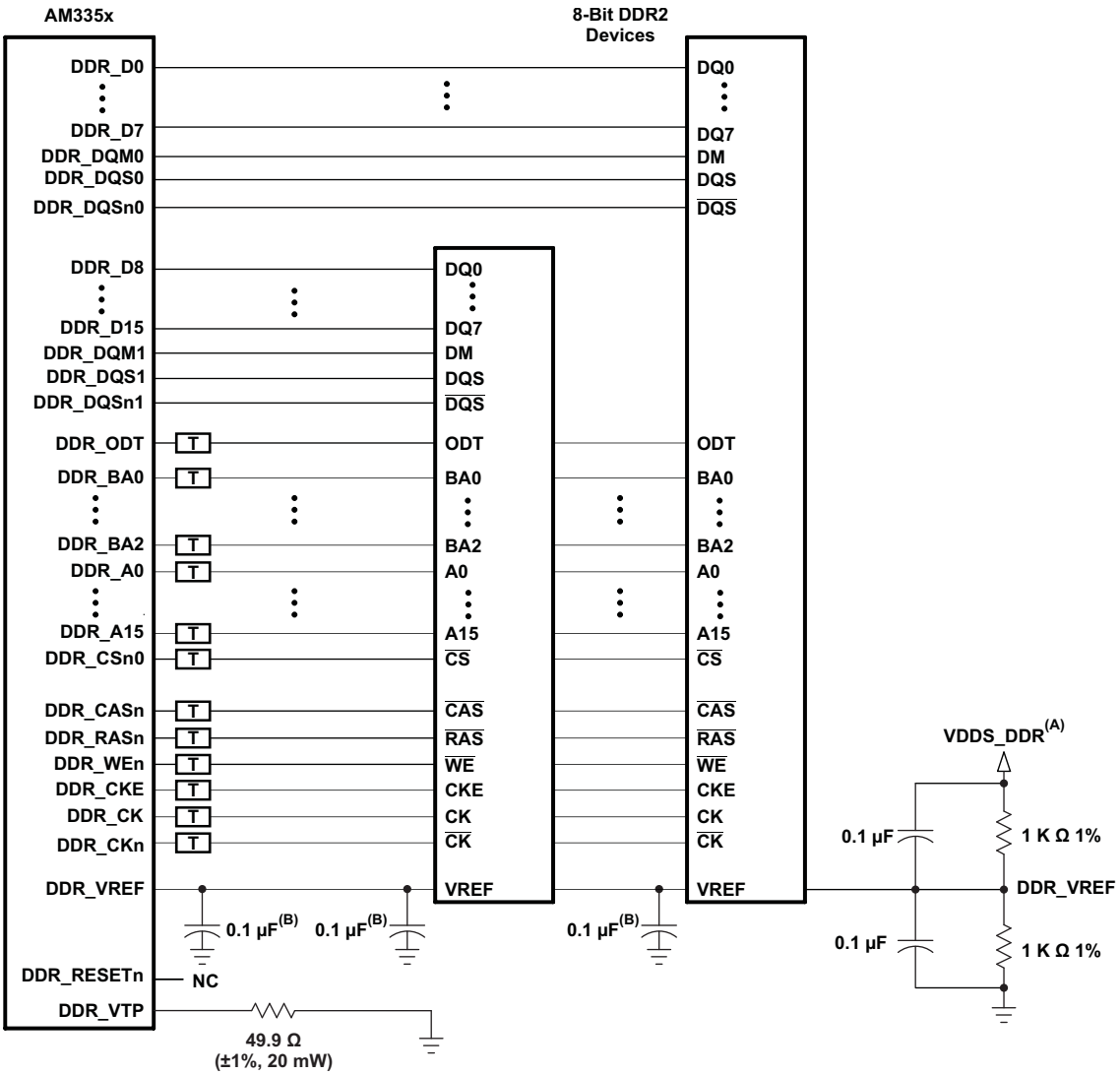

A. VDDS_DDR is the power supply for the DDR2 memories and the AM335x DDR2 interface.
B. One of these capacitors can be eliminated if the divider and its capacitors are placed near a DDR_VREF pin.
C. For all the termination requirements, see Section 5.6.2.2.2.9.

Figure 5-40. 16-Bit DDR2 Interface Using Two 8-Bit DDR2 Devices

Copyright © 2011–2013, Texas Instruments Incorporated

5.6.2.2.2.2 Compatible JEDEC DDR2 Devices

Table 5-44 shows the parameters of the JEDEC DDR2 devices that are compatible with this interface. Generally, the DDR2 interface is compatible with x16 or x8 DDR2-533 speed grade DDR2 devices.

Table 5-44. Compatible JEDEC DDR2 Devices (Per Interface)(1)

NO.	PARAMETER	MIN	MAX	UNIT
1	JEDEC DDR2 device speed grade(2)	DDR2-533		
2	JEDEC DDR2 device bit width	x8	x16	Bits
3	JEDEC DDR2 device count	1	2	Devices
4	JEDEC DDR2 device terminal count(3)	60	84	Terminals

(1) If the DDR2 interface is operated with a clock frequency less than 266 MHz, lower-speed grade DDR2 devices may be used if the minimum clock period specified for the DDR2 device is less than or equal to the minimum clock period selected for the AM335x DDR2 interface.

(2) Higher DDR2 speed grades are supported due to inherent JEDEC DDR2 backwards compatibility.

(3) 92-terminal devices are also supported for legacy reasons. New designs will migrate to 84-terminal DDR2 devices. Electrically, the 92- and 84-terminal DDR2 devices are the same.

5.6.2.2.2.3 PCB Stackup

The minimum stackup required for routing the AM335x device is a four-layer stackup as shown in Table 5-45. Additional layers may be added to the PCB stackup to accommodate other circuitry, enhance signal integrity and electromagnetic interference performance, or to reduce the size of the PCB footprint.

Table 5-45. Minimum PCB Stackup(1)

LAYER	TYPE	DESCRIPTION
1	Signal	Top signal routing
2	Plane	Ground
3	Plane	Split Power Plane
4	Signal	Bottom signal routing

(1) All signals that have critical signal integrity requirements should be routed first on layer 1. It may not be possible to route all of these signals on layer 1 which requires some to be routed on layer 4. When this is done, the signal routes on layer 4 should not cross splits in the power plane.

Complete stackup specifications are provided in Table 5-46.

Table 5-46. PCB Stackup Specifications[(1)]

NO.	PARAMETER		MIN	TYP	MAX	UNIT
1	PCB routing and plane layers		4			
2	Signal routing layers		2			
3	Full ground layers under DDR2 routing region		1			
4	Number of ground plane cuts allowed within DDR2 routing region				0	
5	Full VDDS_DDR power reference layers under DDR2 routing region		1			
6	Number of layers between DDR2 routing layer and reference ground plane				0	
7	PCB routing feature size			4		mils
8	PCB trace width, w			4		mils
9	PCB BGA escape via pad size[(2)]			18	20	mils
10	PCB BGA escape via hole size[(2)]			10		mils
11	AM335x BGA pad size	ZCZ package		0.5		mm
		ZCE package		0.4		
13	Single-ended impedance, Zo[(3)]		50		75	ohms
14	Impedance control[(4)(5)]		Zo-5	Zo	Zo+5	ohms

(1) For the DDR2 device BGA pad size, see the DDR2 device manufacturer documentation.

(2) A 20-10 via may be used if enough power routing resources are available. An 18-10 via allows for more flexible power routing to the AM335x device.

(3) Zo is the nominal singled-ended impedance selected for the PCB.

(4) This parameter specifies the AC characteristic impedance tolerance for each segment of a PCB signal trace relative to the chosen Zo defined by the single-ended impedance parameter.

(5) Tighter impedance control is required to ensure flight time skew is minimal.

Copyright © 2011–2013, Texas Instruments Incorporated

5.6.2.2.2.4 Placement

Figure 5-41 shows the required placement for the DDR2 devices. The dimensions for this figure are defined in Table 5-47. The placement does not restrict the side of the PCB on which the devices are mounted. The ultimate purpose of the placement is to limit the maximum trace lengths and allow for proper routing space. For single-memory DDR2 systems, the second DDR2 device is omitted from the placement.

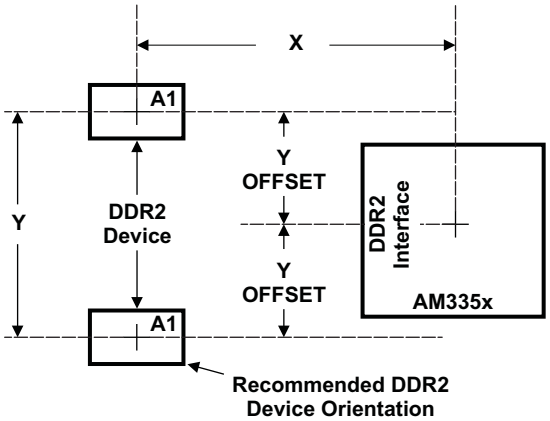

Figure 5-41. AM335x Device and DDR2 Device Placement

Table 5-47. Placement Specifications(1)

NO.	PARAMETER	MIN	MAX	UNIT
1	X(2)(3)		1750	mils
2	Y(2)(3)		1280	mils
3	Y Offset(2)(3)(4)		650	mils
4	Clearance from non-DDR2 signal to DDR2 keepout region(5)(6)	4		w

(1) DDR2 keepout region to encompass entire DDR2 routing area.
(2) For dimension definitions, see Figure 5-41.
(3) Measurements from center of AM335x device to center of DDR2 device.
(4) For single-memory systems, it is recommended that Y offset be as small as possible.
(5) w is defined as the signal trace width.
(6) Non-DDR2 signals allowed within DDR2 keepout region provided they are separated from DDR2 routing layers by a ground plane.

5.6.2.2.2.5 DDR2 Keepout Region

The region of the PCB used for the DDR2 circuitry must be isolated from other signals. The DDR2 keepout region is defined for this purpose and is shown in Figure 5-42. This region should encompass all DDR2 circuitry and the region size varies with component placement and DDR2 routing. Additional clearances required for the keepout region are shown in Table 5-47. Non-DDR2 signals should not be routed on the same signal layer as DDR2 signals within the DDR2 keepout region. Non-DDR2 signals may be routed in the region provided they are routed on layers separated from DDR2 signal layers by a ground layer. No breaks should be allowed in the reference ground or VDDS_DDR power plane in this region. In addition, the VDDS_DDR power plane should cover the entire keepout region.

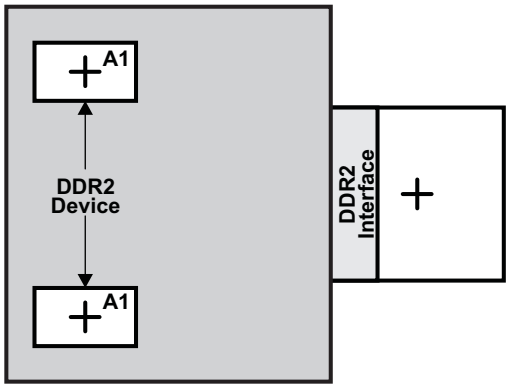

Figure 5-42. DDR2 Keepout Region

5.6.2.2.2.6 Bulk Bypass Capacitors

Bulk bypass capacitors are required for moderate speed bypassing of the DDR2 and other circuitry. Table 5-48 contains the minimum numbers and capacitance required for the bulk bypass capacitors. Note that this table only covers the bypass needs of the AM335x DDR2 interface and DDR2 devices. Additional bulk bypass capacitance may be needed for other circuitry.

Table 5-48. Bulk Bypass Capacitors(1)

NO.	PARAMETER	MIN	MAX	UNIT
1	AM335x VDDS_DDR bulk bypass capacitor count	1		Devices
2	AM335x VDDS_DDR bulk bypass total capacitance	10		µF
3	DDR2#1 bulk bypass capacitor count	1		Devices
4	DDR2#1 bulk bypass total capacitance	10		µF
5	DDR2#2 bulk bypass capacitor count(2)	1		Devices
6	DDR2#2 bulk bypass total capacitance(2)	10		µF

(1) These devices should be placed near the device they are bypassing, but preference should be given to the placement of the high-speed (HS) bypass capacitors.

(2) Only used when two DDR2 devices are used.

Copyright © 2011–2013, Texas Instruments Incorporated

5.6.2.2.2.7 High-Speed Bypass Capacitors

High-speed (HS) bypass capacitors are critical for proper DDR2 interface operation. It is particularly important to minimize the parasitic series inductance of the HS bypass capacitors, AM335x device DDR2 power, and AM335x device DDR2 ground connections. Table 5-49 contains the specification for the HS bypass capacitors as well as for the power connections on the PCB.

Table 5-49. High-Speed Bypass Capacitors

NO.	PARAMETER	MIN	MAX	UNIT
1	HS bypass capacitor package size(1)		0402	10 mils
2	Distance from HS bypass capacitor to device being bypassed		250	mils
3	Number of connection vias for each HS bypass capacitor(2)	2		Vias
4	Trace length from bypass capacitor contact to connection via		30	mils
5	Number of connection vias for each AM335x VDDS_DDR and VSS terminal	1		Vias
6	Trace length from AM335x VDDS_DDR and VSS terminal to connection via		35	mils
7	Number of connection vias for each DDR2 device power and ground terminal	1		Vias
8	Trace length from DDR2 device power and ground terminal to connection via		35	mils
9	AM335x VDDS_DDR HS bypass capacitor count(3)	10		Devices
10	AM335x VDDS_DDR HS bypass capacitor total capacitance	0.6		µF
11	DDR2 device HS bypass capacitor count(3)(4)	8		Devices
12	DDR2 device HS bypass capacitor total capacitance(4)	0.4		µF

(1) LxW, 10-mil units; for example, a 0402 is a 40x20-mil surface-mount capacitor.
(2) An additional HS bypass capacitor can share the connection vias only if it is mounted on the opposite side of the board.
(3) These devices should be placed as close as possible to the device being bypassed.
(4) Per DDR2 device.

5.6.2.2.2.8 Net Classes

Table 5-50 lists the clock net classes for the DDR2 interface. Table 5-51 lists the signal net classes, and associated clock net classes, for the signals in the DDR2 interface. These net classes are used for the termination and routing rules that follow.

Table 5-50. Clock Net Class Definitions

CLOCK NET CLASS	AM335x PIN NAMES
CK	DDR_CK and DDR_CKn
DQS0	DDR_DQS0 and DDR_DQSn0
DQS1	DDR_DQS1 and DDR_DQSn1

Table 5-51. Signal Net Class Definitions

SIGNAL NET CLASS	ASSOCIATED CLOCK NET CLASS	AM335x PIN NAMES
ADDR_CTRL	CK	DDR_BA[2:0], DDR_A[15:0], DDR_CSn0, DDR_CASn, DDR_RASn, DDR_WEn, DDR_CKE, DDR_ODT
DQ0	DQS0	DDR_D[7:0], DDR_DQM0
DQ1	DQS1	DDR_D[15:8], DDR_DQM1

5.6.2.2.2.9 DDR2 Signal Termination

Signal terminations are required on the CK and ADDR_CTRL net class signals. Serial terminations should be used on the CK and ADDR_CTRL lines and is the preferred termination scheme. On-device terminations (ODTs) are required on the DQS[x] and DQ[x] net class signals. They should be enabled to ensure signal integrity. Table 5-52 shows the specifications for the series terminators. Placement of serial terminations for ADDR_CTRL net class signals should be close to the AM335x device.

Table 5-52. DDR2 Signal Terminations

NO.	PARAMETER	MIN	TYP	MAX	UNIT
1	CK net class(1)	0		10	ohms
2	ADDR_CTRL net class(1)(2)(3)	0	22	Zo(4)	ohms
3	DQS0, DQS1, DQ0, and DQ1 net classes(5)	NA		NA	ohms

(1) Only series termination is permitted.
(2) Series termination values larger than typical only recommended to address EMI issues.
(3) Series termination values should be uniform across net class.
(4) Zo is the DDR2 PCB trace characteristic impedance.
(5) No external termination resistors are allowed and ODT must be used for these net classes.

If the DDR2 interface is operated at a lower frequency (<200-MHz clock rate), on-device terminations are not specifically required for the DQS[x] and DQ[x] net class signals and serial terminations for the CK and ADDR_CTRL net class signals are not mandatory. System designers may evaluate the need for serial terminators for EMI and overshoot reduction. Placement of serial terminations for DQS[x] and DQ[x] net class signals should be determined based on PCB analysis. Placement of serial terminations for ADDR_CTRL net class signals should be close to the AM335x device. Table 5-53 shows the specifications for the serial terminators in such cases.

Table 5-53. Lower-Frequency DDR2 Signal Terminations

NO.	PARAMETER	MIN	TYP	MAX	UNIT
1	CK net class(1)	0	22	Zo(2)	ohms
2	ADDR_CTRL net class(1)(3)(4)	0	22	Zo(2)	ohms
3	DQS0, DQS1, DQ0, and DQ1 net classes	0	22	Zo(2)	ohms

(1) Only series termination is permitted.
(2) Zo is the DDR2 PCB trace characteristic impedance.
(3) Series termination values larger than typical only recommended to address EMI issues.
(4) Series termination values should be uniform across net class.

Copyright © 2011–2013, Texas Instruments Incorporated

5.6.2.2.2.10 DDR_VREF Routing

DDR_VREF is used as a reference by the input buffers of the DDR2 memories as well as the AM335x device. DDR_VREF is intended to be half the DDR2 power supply voltage and should be created using a resistive divider as shown in Figure 5-39 and Figure 5-40. Other methods of creating DDR_VREF are not recommended. Figure 5-43 shows the layout guidelines for DDR_VREF.

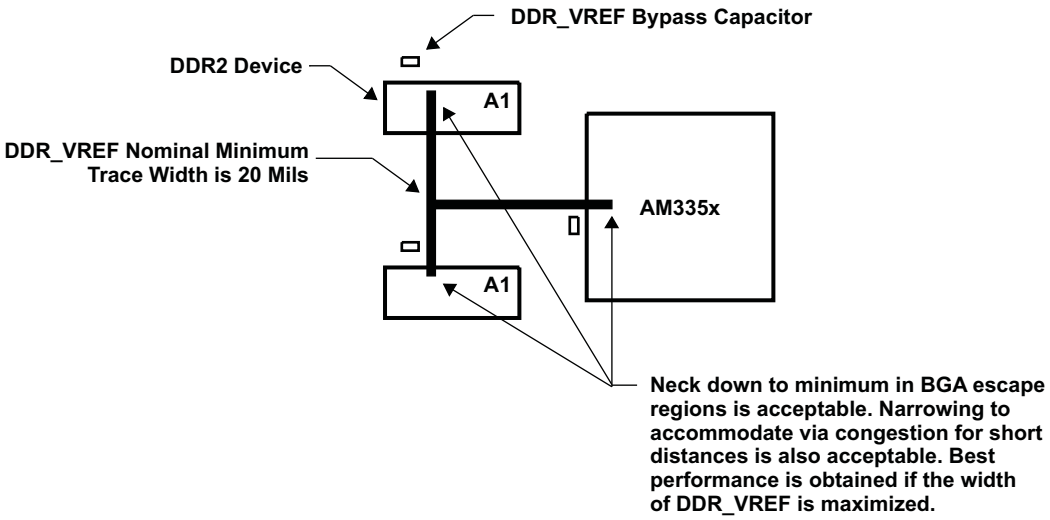

Figure 5-43. DDR_VREF Routing and Topology

5.6.2.2.3 DDR2 CK and ADDR_CTRL Routing

Figure 5-44 shows the topology of the routing for the CK and ADDR_CTRL net classes. The length of signal path AB and AC should be minimized with emphasis to minimize lengths C and D such that length A is the majority of the total length of signal path AB and AC.

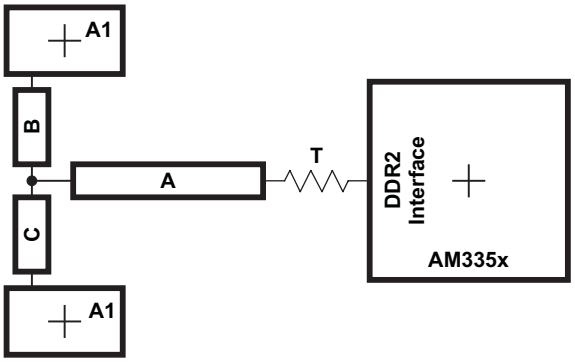

Figure 5-44. CK and ADDR_CTRL Routing and Topology

Table 5-54. CK and ADDR_CTRL Routing Specification(1)(2)

NO.	PARAMETER	MIN	TYP	MAX	UNIT
1	Center-to-center CK spacing			2w	
2	CK differential pair skew length mismatch(2)(3)			25	mils
3	CK B-to-CK C skew length mismatch			25	mils
4	Center-to-center CK to other DDR2 trace spacing(4)	4w			
5	CK and ADDR_CTRL nominal trace length(5)	CACLM-50	CACLM	CACLM+50	mils
6	ADDR_CTRL-to-CK skew length mismatch			100	mils
7	ADDR_CTRL-to-ADDR_CTRL skew length mismatch			100	mils
8	Center-to-center ADDR_CTRL to other DDR2 trace spacing(4)	4w			
9	Center-to-center ADDR_CTRL to other ADDR_CTRL trace spacing(4)	3w			
10	ADDR_CTRL A-to-B and ADDR_CTRL A-to-C skew length mismatch(2)			100	mils
11	ADDR_CTRL B-to-C skew length mismatch			100	mils

(1) CK represents the clock net class, and ADDR_CTRL represents the address and control signal net class.

(2) Series terminator, if used, should be located closest to the AM335x device.

(3) Differential impedance should be Zo x 2, where Zo is the single-ended impedance defined in Table 5-46.

(4) Center-to-center spacing is allowed to fall to minimum (w) for up to 500 mils of routed length to accommodate BGA escape and routing congestion.

(5) CACLM is the longest Manhattan distance of the CK and ADDR_CTRL net classes.

Figure 5-45 shows the topology and routing for the DQS[x] and DQ[x] net classes; the routes are point to point. Skew matching across bytes is not needed nor recommended.

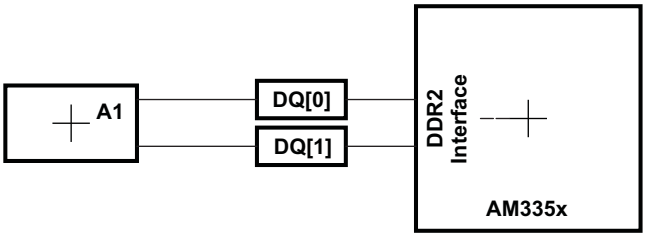

Figure 5-45. DQS[x] and DQ[x] Routing and Topology

Copyright © 2011–2013, Texas Instruments Incorporated

Table 5-55. DQS[x] and DQ[x] Routing Specification[1]

NO.	PARAMETER	MIN	TYP	MAX	UNIT
1	Center-to-center DQS[x] spacing			2w	
2	DQS[x] differential pair skew length mismatch[2]			25	mils
3	Center-to-center DDR_DQS[x] to other DDR2 trace spacing[3]	4w			
4	DQS[x] and DQ[x] nominal trace length[4]	DQLM-50	DQLM	DQLM+50	mils
5	DQ[x]-to-DQS[x] skew length mismatch[4]			100	mils
6	DQ[x]-to-DQ[x] skew length mismatch[4]			100	mils
7	Center-to-center DQ[x] to other DDR2 trace spacing[3][5]	4w			
8	Center-to-center DQ[x] to other DQ[x] trace spacing[3][6]	3w			

(1) DQS[x] represents the DQS0 and DQS1 clock net classes, and DQ[x] represents the DQ0 and DQ1 signal net classes.

(2) Differential impedance should be Zo x 2, where Zo is the single-ended impedance defined in Table 5-46.

(3) Center-to-center spacing is allowed to fall to minimum (w) for up to 500 mils of routed length to accommodate BGA escape and routing congestion.

(4) There is no requirement for skew matching between data bytes; that is, from net classes DQS0 and DQ0 to net classes DQS1 and DQ1.

(5) Signals from one DQ net class should be considered other DDR2 traces to another DQ net class.

(6) DQLM is the longest Manhattan distance of each of the DQS[x] and DQ[x] net classes.

Copyright © 2011–2013, Texas Instruments Incorporated

5.6.2.3 DDR3 and DDR3L Routing Guidelines

NOTE

All references to DDR3 in this section apply to DDR3 and DDR3L devices, unless otherwise noted.

5.6.2.3.1 Board Designs

TI only supports board designs utilizing DDR3 memory that follow the guidelines in this document. The switching characteristics and timing diagram for the DDR3 memory interface are shown in Table 5-56 and Figure 5-46.

Table 5-56. Switching Characteristics for DDR3 Memory Interface

NO.	PARAMETER		MIN	MAX	UNIT
1	$t_{c(DDR_CK)}$ $t_{c(DDR_CKn)}$	Cycle time, DDR_CK and DDR_CKn	2.5	3.3[(1)]	ns

(1) The JEDEC JESD79-3F Standard defines the maximum clock period of 3.3 ns for all standard-speed bin DDR3 and DDR3L memory devices. Therefore, all standard-speed bin DDR3 and DDR3L memory devices are required to operate at 303 MHz.

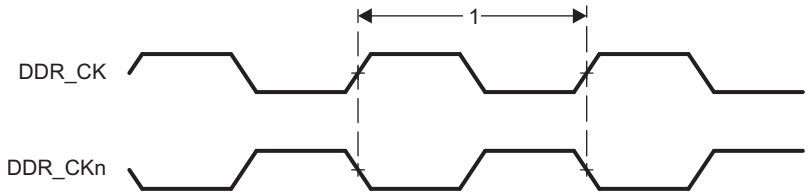

Figure 5-46. DDR3 Memory Interface Clock Timing

5.6.2.3.1.1 DDR3 versus DDR2

This specification only covers AM335x PCB designs that utilize DDR3 memory. Designs using DDR2 memory should use the DDR2 routing guidleines described in Section 5.6.2.2. While similar, the two memory systems have different requirements. It is currently not possible to design one PCB that meets the requirements of both DDR2 and DDR3.

5.6.2.3.2 DDR3 Device Combinations

Since there are several possible combinations of device counts and single-side or dual-side mounting, Table 5-57 summarizes the supported device configurations.

Table 5-57. Supported DDR3 Device Combinations

NUMBER OF DDR3 DEVICES	DDR3 DEVICE WIDTH (BITS)	MIRRORED?	DDR3 EMIF WIDTH (BITS)
1	16	N	16
2	8	Y[(1)]	16

(1) Two DDR3 devices are mirrored when one device is placed on the top of the board and the second device is placed on the bottom of the board.

Copyright © 2011–2013, Texas Instruments Incorporated

5.6.2.3.3 DDR3 Interface

5.6.2.3.3.1 DDR3 Interface Schematic

The DDR3 interface schematic varies, depending upon the width of the DDR3 devices used. Figure 5-47 shows the schematic connections for 16-bit interface on AM335x device using one x16 DDR3 device and Figure 5-49 shows the schematic connections for 16-bit interface on AM335x device using two x8 DDR3 devices. The AM335x DDR3 memory interface only supports 16-bit wide mode of operation. The AM335x device can only source one load connected to the DQS[x] and DQ[x] net class signals and two loads connected to the CK and ADDR_CTRL net class signals. For more information related to net classes, see Section 5.6.2.3.3.8.

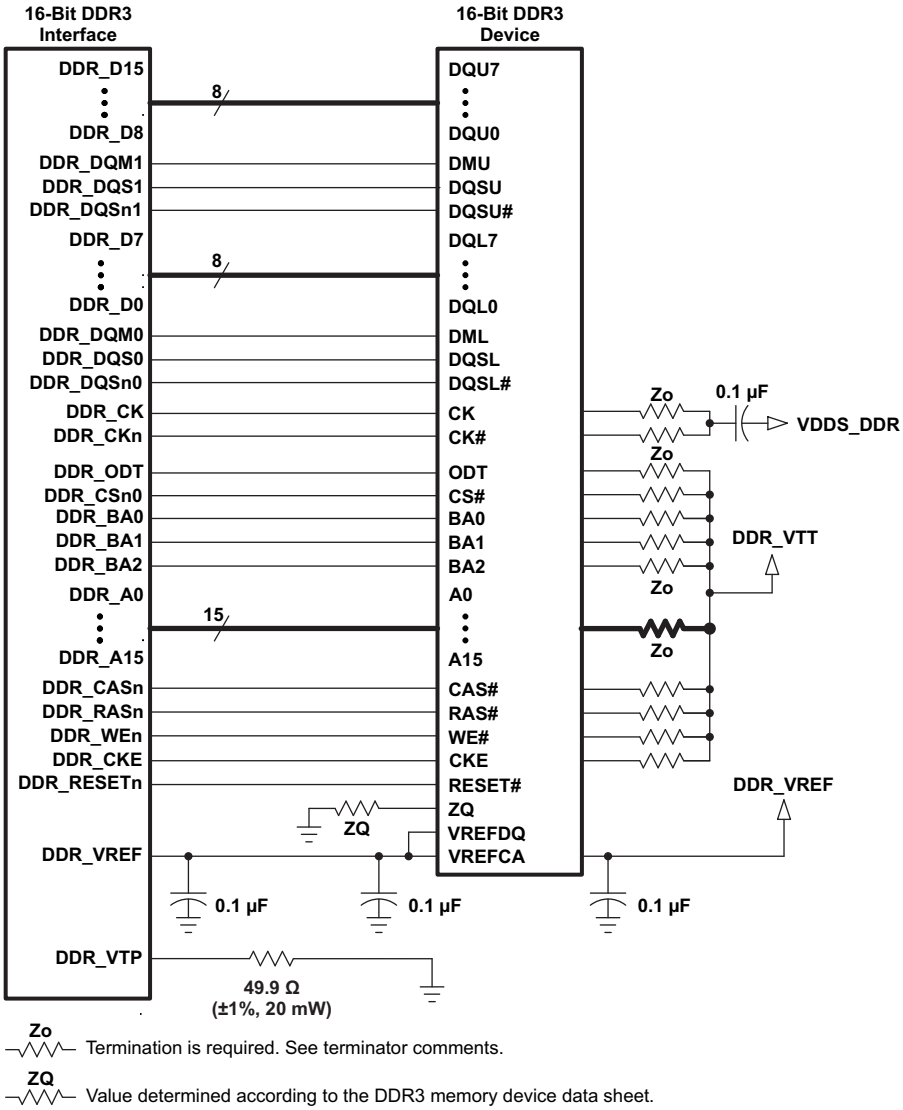

Figure 5-47. 16-Bit DDR3 Interface Using One 16-Bit DDR3 Device with V_{TT} Termination

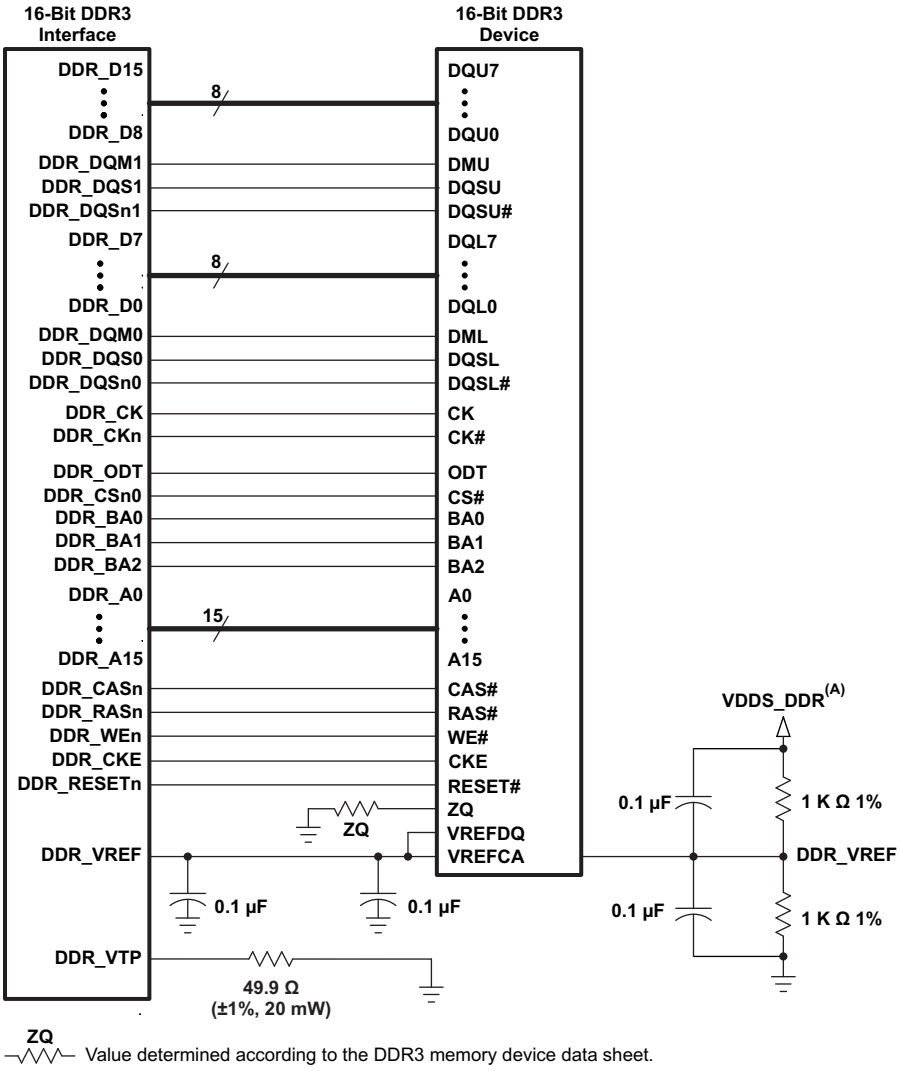

A. VDDS_DDR is the power supply for the DDR3 memories and the AM335x DDR3 interface.

Figure 5-48. 16-Bit DDR3 Interface Using One 16-Bit DDR3 Device without V_{TT} Termination

Copyright © 2011–2013, Texas Instruments Incorporated

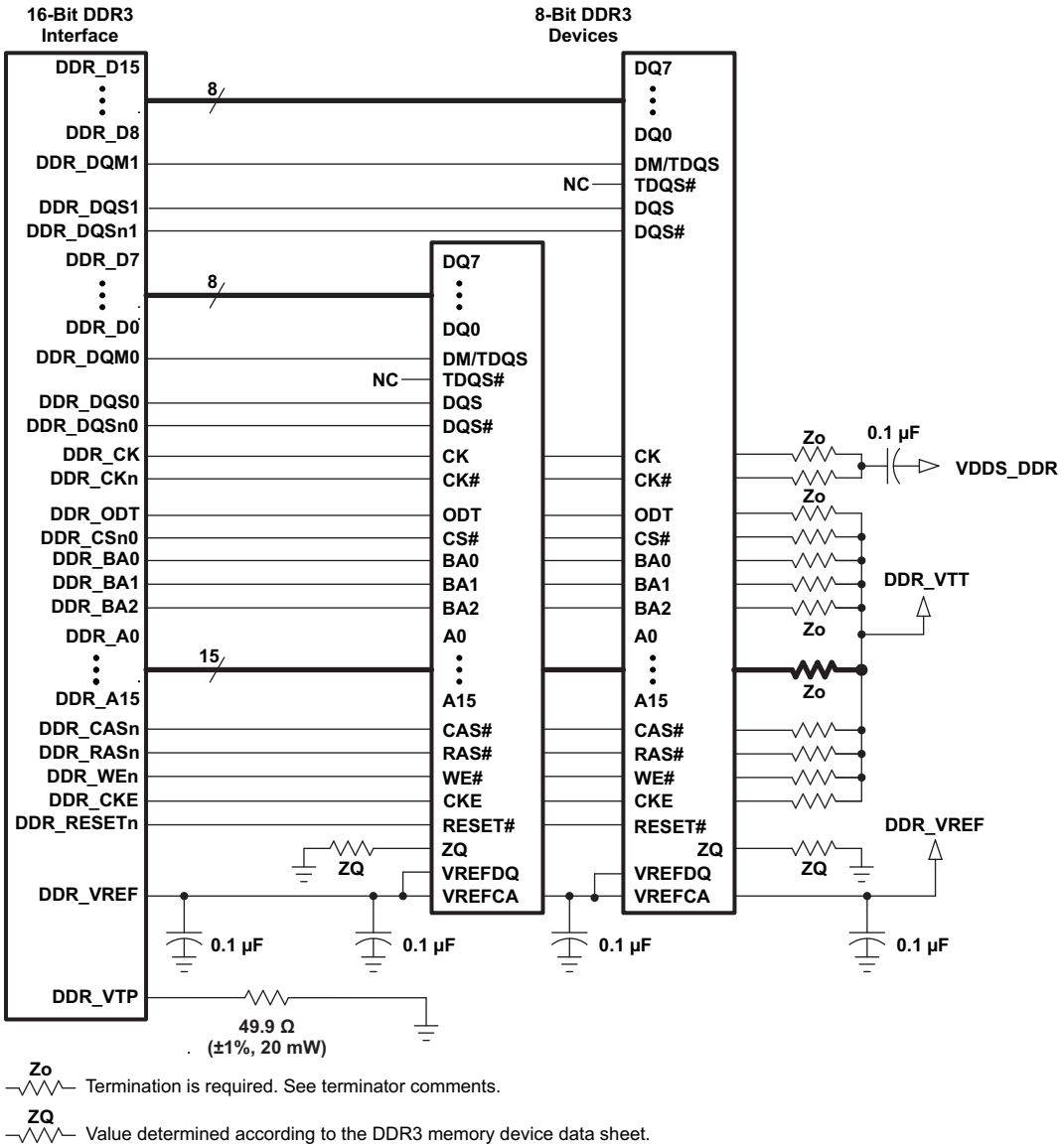

Figure 5-49. 16-Bit DDR3 Interface Using Two 8-Bit DDR3 Devices

5.6.2.3.3.2 Compatible JEDEC DDR3 Devices

Table 5-58 shows the parameters of the JEDEC DDR3 devices that are compatible with this interface.

Table 5-58. Compatible JEDEC DDR3 Devices (Per Interface)

NO.	PARAMETER	CONDITION	MIN	MAX	UNIT
1	JEDEC DDR3 device speed grade	$t_{C(DDR_CK)}$ and $t_{C(DDR_CKn)}$ = 3.3ns	DDR3-800		
		$t_{C(DDR_CK)}$ and $t_{C(DDR_CKn)}$ = 2.5ns	DDR3-1600		
2	JEDEC DDR3 device bit width		x8	x16	Bits
3	JEDEC DDR3 device count(1)		1	2	Devices

(1) For valid DDR3 device configurations and device counts, see Section 5.6.2.3.3.1, Figure 5-47, and Figure 5-49.

5.6.2.3.3.3 PCB Stackup

The minimum stackup for routing the DDR3 interface is a four-layer stack up as shown in Table 5-59. Additional layers may be added to the PCB stackup to accommodate other circuitry, enhance signal integrity and electromagnetic interference performance, or to reduce the size of the PCB footprint.

Table 5-59. Minimum PCB Stackup(1)

LAYER	TYPE	DESCRIPTION
1	Signal	Top signal routing
2	Plane	Ground
3	Plane	Split Power Plane
4	Signal	Bottom signal routing

(1) All signals that have critical signal integrity requirements should be routed first on layer 1. It may not be possible to route all of these signals on layer 1 which requires some to be routed on layer 4. When this is done, the signal routes on layer 4 should not cross splits in the power plane.

Copyright © 2011–2013, Texas Instruments Incorporated

Table 5-60. PCB Stackup Specifications[1]

NO.	PARAMETER		MIN	TYP	MAX	UNIT
1	PCB routing and plane layers		4			
2	Signal routing layers		2			
3	Full ground reference layers under DDR3 routing region[2]		1			
4	Full VDDS_DDR power reference layers under the DDR3 routing region[2]		1			
5	Number of reference plane cuts allowed within DDR3 routing region[3]				0	
6	Number of layers between DDR3 routing layer and reference plane[4]				0	
7	PCB routing feature size			4		mils
8	PCB trace width, w			4		mils
9	PCB BGA escape via pad size[5]			18	20	mils
10	PCB BGA escape via hole size			10		mils
11	AM335x BGA pad size	ZCZ package		0.5		mm
		ZCE package		0.4		
13	Single-ended impedance, Zo[6]		50		75	ohms
14	Impedance control[7][8]		Zo-5	Zo	Zo+5	ohms

(1) For the DDR3 device BGA pad size, see the DDR3 device manufacturer documentation.

(2) Ground reference layers are preferred over power reference layers. Be sure to include bypass caps to accommodate reference layer return current as the trace routes switch routing layers.

(3) No traces should cross reference plane cuts within the DDR3 routing region. High-speed signal traces crossing reference plane cuts create large return current paths which can lead to excessive crosstalk and EMI radiation.

(4) Reference planes are to be directly adjacent to the signal plane to minimize the size of the return current loop.

(5) An 18-mil pad assumes Via Channel is the most economical BGA escape. A 20-mil pad may be used if additional layers are available for power routing. An 18-mil pad is required for minimum layer count escape.

(6) Zo is the nominal singled-ended impedance selected for the PCB.

(7) This parameter specifies the AC characteristic impedance tolerance for each segment of a PCB signal trace relative to the chosen Zo defined by the single-ended impedance parameter.

(8) Tighter impedance control is required to ensure flight time skew is minimal.

Copyright © 2011–2013, Texas Instruments Incorporated

5.6.2.3.3.4 Placement

Figure 5-50 shows the required placement for the AM335x device as well as the DDR3 devices. The dimensions for this figure are defined in Table 5-61. The placement does not restrict the side of the PCB on which the devices are mounted. The ultimate purpose of the placement is to limit the maximum trace lengths and allow for proper routing space.

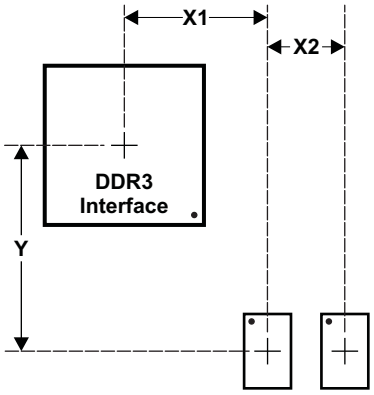

Figure 5-50. Placement Specifications

Table 5-61. Placement Specifications[1]

NO.	PARAMETER	MIN	MAX	UNIT
1	X1[2][3][4]		1000	mils
2	X2[2][3]		600	mils
3	Y Offset[2][3][4]		1500	mils
4	Clearance from non-DDR3 signal to DDR3 keepout region[5][6]	4		w

(1) DDR3 keepout region to encompass entire DDR3 routing area.
(2) For dimension definitions, see Figure 5-50.
(3) Measurements from center of AM335x device to center of DDR3 device.
(4) Minimizing X1 and Y improves timing margins.
(5) w is defined as the signal trace width.
(6) Non-DDR3 signals allowed within DDR3 keepout region provided they are separated from DDR3 routing layers by a ground plane.

Copyright © 2011–2013, Texas Instruments Incorporated

5.6.2.3.3.5 DDR3 Keepout Region

The region of the PCB used for DDR3 circuitry must be isolated from other signals. The DDR3 keepout region is defined for this purpose and is shown in Figure 5-51. This region should encompass all DDR3 circuitry and the region size varies with component placement and DDR3 routing. Additional clearances required for the keepout region are shown in Table 5-61. Non-DDR3 signals should not be routed on the same signal layer as DDR3 signals within the DDR3 keepout region. Non-DDR3 signals may be routed in the region provided they are routed on layers separated from DDR3 signal layers by a ground layer. No breaks should be allowed in the reference ground or VDDS_DDR power plane in this region. In addition, the VDDS_DDR power plane should cover the entire keepout region.

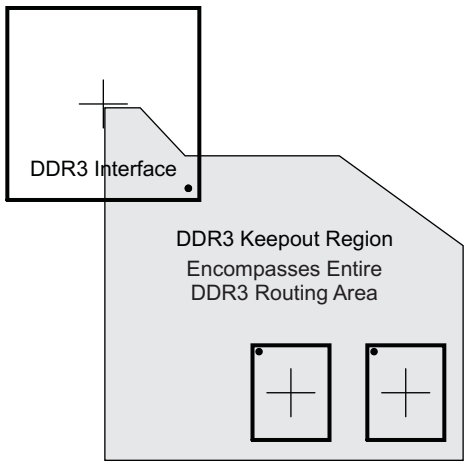

Figure 5-51. DDR3 Keepout Region

5.6.2.3.3.6 Bulk Bypass Capacitors

Bulk bypass capacitors are required for moderate speed bypassing of the DDR3 and other circuitry. Table 5-62 contains the minimum numbers and capacitance required for the bulk bypass capacitors. Note that this table only covers the bypass needs of the AM335x DDR3 interface and DDR3 devices. Additional bulk bypass capacitance may be needed for other circuitry.

Table 5-62. Bulk Bypass Capacitors(1)

NO.	PARAMETER	MIN	MAX	UNIT
1	AM335x VDDS_DDR bulk bypass capacitor count	2		Devices
2	AM335x VDDS_DDR bulk bypass total capacitance	20		µF
3	DDR3#1 bulk bypass capacitor count	2		Devices
4	DDR3#1 bulk bypass total capacitance	20		µF
5	DDR3#2 bulk bypass capacitor count(2)	2		Devices
6	DDR3#2 bulk bypass total capacitance(2)	20		µF

(1) These devices should be placed near the devices they are bypassing, but preference should be given to the placement of the high-speed (HS) bypass capacitors and DDR3 signal routing.

(2) Only used when two DDR3 devices are used.

5.6.2.3.3.7 High-Speed Bypass Capacitors

High-speed (HS) bypass capacitors are critcal for proper DDR3 interface operation. It is particularly important to minimize the parasitic series inductance of the HS bypass capacitors, AM335x device DDR3 power, and AM335x device DDR3 ground connections. Table 5-63 contains the specification for the HS bypass capacitors as well as for the power connections on the PCB. Generally speaking, it is good to:

1. Fit as many HS bypass capacitors as possible.
2. Minimize the distance from the bypass cap to the power terminals being bypassed.
3. Use the smallest physical sized capacitors possible with the highest capacitance readily available.
4. Connect the bypass capacitor pads to their vias using the widest traces possible and using the largest hole size via possible.
5. Minimize via sharing. Note the limites on via sharing shown in Table 5-63.

Table 5-63. High-Speed Bypass Capacitors

NO.	PARAMETER	MIN	TYP	MAX	UNIT
1	HS bypass capacitor package size(1)		0201	0402	10 mils
2	Distance, HS bypass capacitor to AM335x VDDS_DDR and VSS terminal being bypassed(2)(3)(4)			400	mils
3	AM335x VDDS_DDR HS bypass capacitor count	20			Devices
4	AM335x VDDS_DDR HS bypass capacitor total capacitance	1			µF
5	Trace length from AM335x VDDS_DDR and VSS terminal to connection via(2)		35	70	mils
6	Distance, HS bypass capacitor to DDR3 device being bypassed(5)			150	mils
7	DDR3 device HS bypass capacitor count(6)	12			Devices
8	DDR3 device HS bypass capacitor total capacitance(6)	0.85			µF
9	Number of connection vias for each HS bypass capacitor(7)(8)	2			Vias
10	Trace length from bypass capacitor connect to connection via(2)(8)		35	100	mils
11	Number of connection vias for each DDR3 device power and ground terminal(9)	1			Vias
12	Trace length from DDR3 device power and ground terminal to connection via(2)(7)		35	60	mils

(1) LxW, 10-mil units; for example, a 0402 is a 40x20-mil surface-mount capacitor.
(2) Closer and shorter is better.
(3) Measured from the nearest AM335x VDDS_DDR and ground terminal to the center of the capacitor package.
(4) Three of these capacitors should be located underneath the AM335x device, between the cluster of VDDS_DDR and ground terminals, between the DDR3 interfaces on the package.
(5) Measured from the DDR3 device power and ground terminal to the center of the capacitor package.
(6) Per DDR3 device.
(7) An additional HS bypass capacitor can share the connection vias only if it is mounted on the opposite side of the board. No sharing of vias is permitted on the same side of the board.
(8) An HS bypass capacitor may share a via with a DDR3 device mounted on the same side of the PCB. A wide trace should be used for the connection and the length from the capacitor pad to the DDR3 device pad should be less than 150 mils.
(9) Up to a total of two pairs of DDR3 power and ground terminals may share a via.

5.6.2.3.3.7.1 Return Current Bypass Capacitors

Use additional bypass capacitors if the return current reference plane changes due to DDR3 signals hopping from one signal layer to another. The bypass capacitor here provides a path for the return current to hop planes along with the signal. As many of these return current bypass capacitors should be used as possible. Since these are returns for signal current, the signal via size may be used for these capacitors.

Copyright © 2011–2013, Texas Instruments Incorporated

5.6.2.3.3.8 Net Classes

Table 5-64 lists the clock net classes for the DDR3 interface. Table 5-65 lists the signal net classes, and associated clock net classes, for signals in the DDR3 interface. These net classes are used for the termination and routing rules that follow.

Table 5-64. Clock Net Class Definitions

CLOCK NET CLASS	AM335x PIN NAMES
CK	DDR_CK and DDR_CKn
DQS0	DDR_DQS0 and DDR_DQSn0
DQS1	DDR_DQS1 and DDR_DQSn1

Table 5-65. Signal Net Class Definitions

SIGNAL NET CLASS	ASSOCIATED CLOCK NET CLASS	AM335x PIN NAMES
ADDR_CTRL	CK	DDR_BA[2:0], DDR_A[15:0], DDR_CSn0, DDR_CASn, DDR_RASn, DDR_WEn, DDR_CKE, DDR_ODT
DQ0	DQS0	DDR_D[7:0], DDR_DQM0
DQ1	DQS1	DDR_D[15:8], DDR_DQM1

5.6.2.3.3.9 DDR3 Signal Termination

Signal terminations are required for the CK and ADDR_CTRL net class signals. On-device terminations (ODTs) are required on the DQS[x] and DQ[x] net class signals. Detailed termination specifications are covered in the routing rules in the following sections.

Figure 5-48 provides an example DDR3 schematic with a single 16-bit DDR3 memory device that does not have V_{TT} termination on the address and control signals. A typical DDR3 point-to-point topology may provide acceptable signal integrity without V_{TT} termination. System performance should be verified by performing signal integrity analysis using specific PCB design details before implementing this topology.

5.6.2.3.3.10 DDR_VREF Routing

DDR_VREF is used as a reference by the input buffers of the DDR3 memories as well as the AM335x device. DDR_VREF is intended to be half the DDR3 power supply voltage and is typically generated with a voltage divider connected to the VDDS_DDR power supply. It should be routed as a nominal 20-mil wide trace with 0.1 µF bypass capacitors near each device connection. Narrowing of DDR_VREF is allowed to accommodate routing congestion.

5.6.2.3.3.11 VTT

Like DDR_VREF, the nominal value of the VTT supply is half the DDR3 supply voltage. Unlike DDR_VREF, VTT is expected to source and sink current, specifically the termination current for the ADDR_CTRL net class Thevinen terminators. VTT is needed at the end of the address bus and it should be routed as a power sub-plane. VTT should be bypassed near the terminator resistors.

5.6.2.3.4 DDR3 CK and ADDR_CTRL Topologies and Routing Definition

The CK and ADDR_CTRL net classes are routed similarly and are length matched to minimize skew between them. CK is a bit more complicated because it runs at a higher transition rate and is differential. The following subsections show the topology and routing for various DDR3 configurations for CK and ADDR_CTRL. The figures in the following subsections define the terms for the routing specification detailed in Table 5-66.

5.6.2.3.4.1 Two DDR3 Devices

Two DDR3 devices are supported on the DDR3 interface consisting of two x8 DDR3 devices arranged as one 16-bit bank. These two devices may be mounted on a single side of the PCB, or may be mirrored in a pair to save board space at a cost of increased routing complexity and parts on the backside of the PCB.

5.6.2.3.4.1.1 CK and ADDR_CTRL Topologies, Two DDR3 Devices

Figure 5-52 shows the topology of the CK net classes and Figure 5-53 shows the topology for the corresponding ADDR_CTRL net classes.

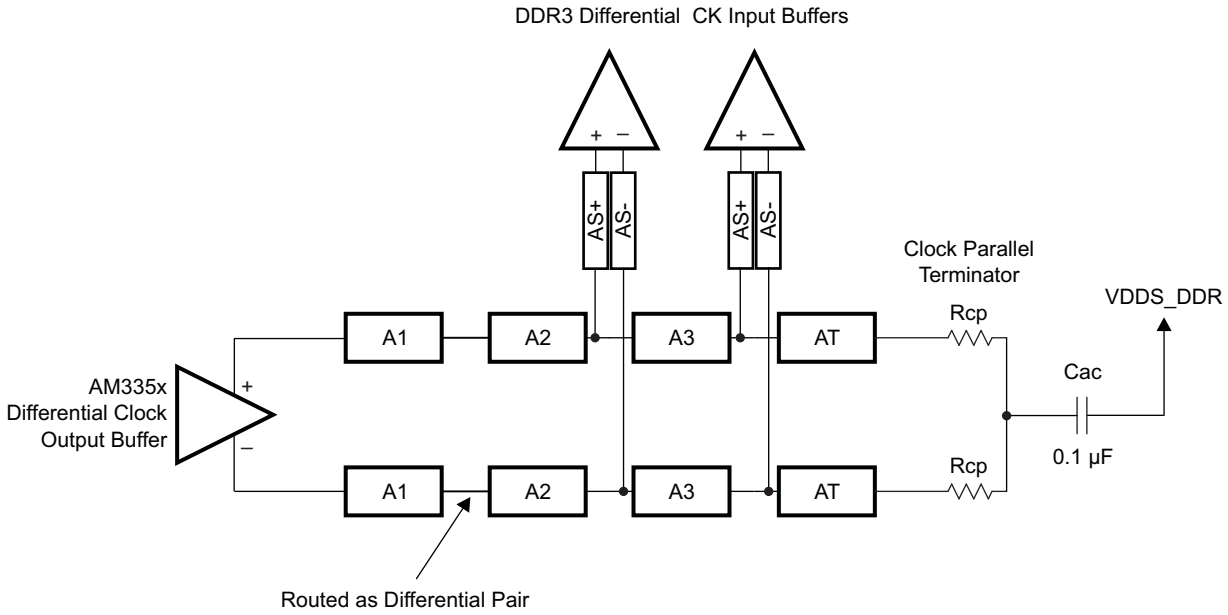

Figure 5-52. CK Topology for Two DDR3 Devices

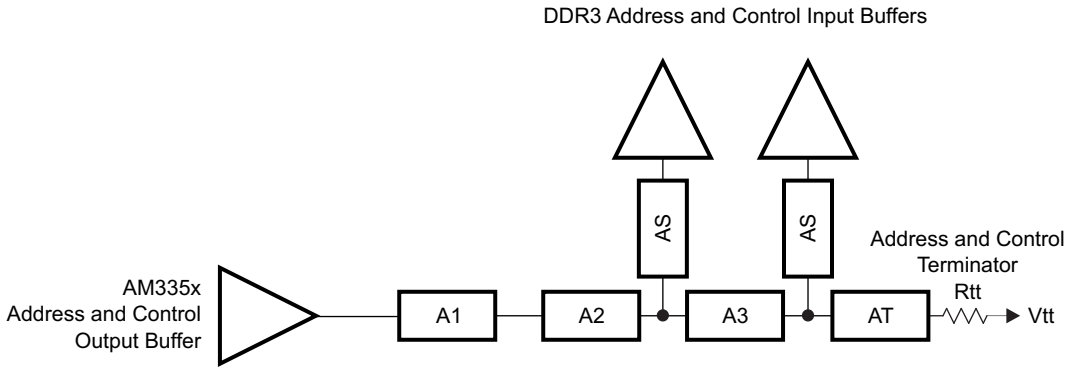

Figure 5-53. ADDR_CTRL Topology for Two DDR3 Devices

5.6.2.3.4.1.2 CK and ADDR_CTRL Routing, Two DDR3 Devices

Figure 5-54 shows the CK routing for two DDR3 devices placed on the same side of the PCB. Figure 5-55 shows the corresponding ADDR_CTRL routing.

Copyright © 2011–2013, Texas Instruments Incorporated

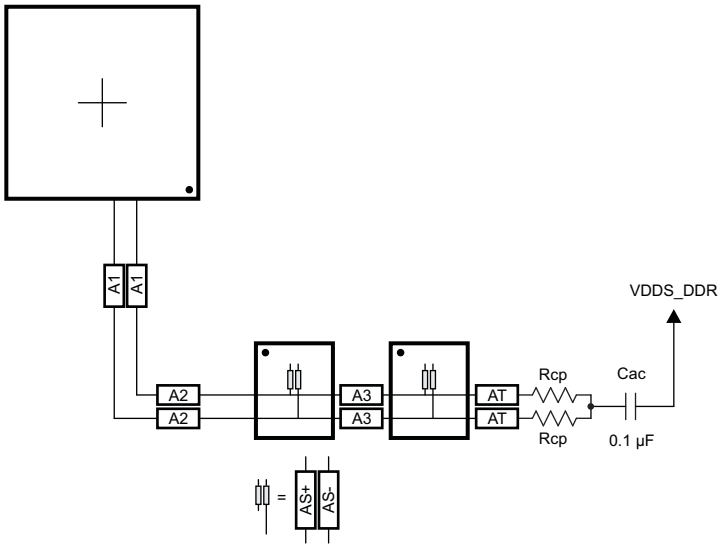

Figure 5-54. CK Routing for Two Single-Side DDR3 Devices

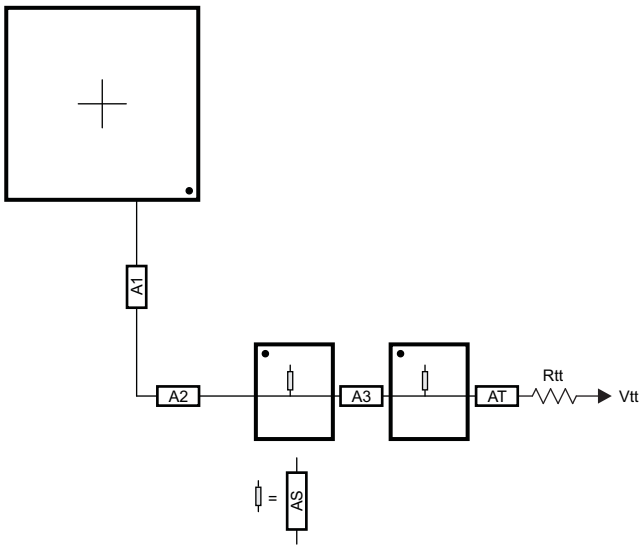

Figure 5-55. ADDR_CTRL Routing for Two Single-Side DDR3 Devices

To save PCB space, the two DDR3 memories may be mounted as a mirrored pair at a cost of increased routing and assembly complexity. Figure 5-56 and Figure 5-57 show the routing for CK and ADDR_CTRL, respectively, for two DDR3 devices mirrored in a single-pair configuration.

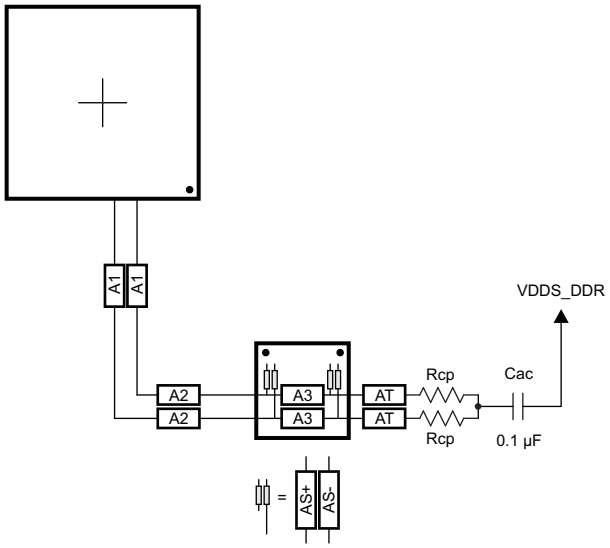

Figure 5-56. CK Routing for Two Mirrored DDR3 Devices

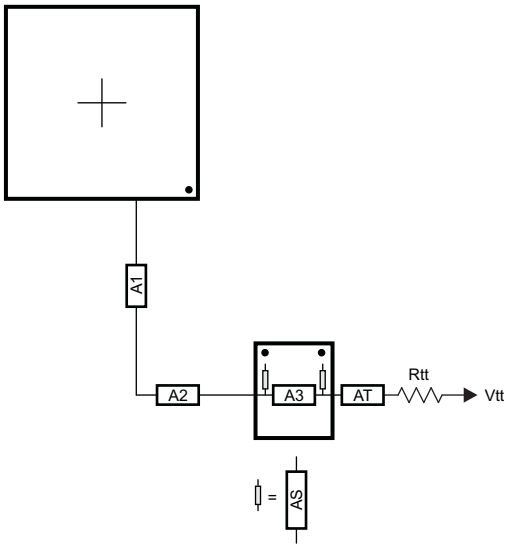

Figure 5-57. ADDR_CTRL Routing for Two Mirrored DDR3 Devices

Copyright © 2011–2013, Texas Instruments Incorporated

5.6.2.3.4.2 One DDR3 Device

A single DDR3 device is supported on the DDR3 interface consisting of one x16 DDR3 device arranged as one 16-bit bank.

5.6.2.3.4.2.1 CK and ADDR_CTRL Topologies, One DDR3 Device

Figure 5-58 shows the topology of the CK net classes and Figure 5-59 shows the topology for the corresponding ADDR_CTRL net classes.

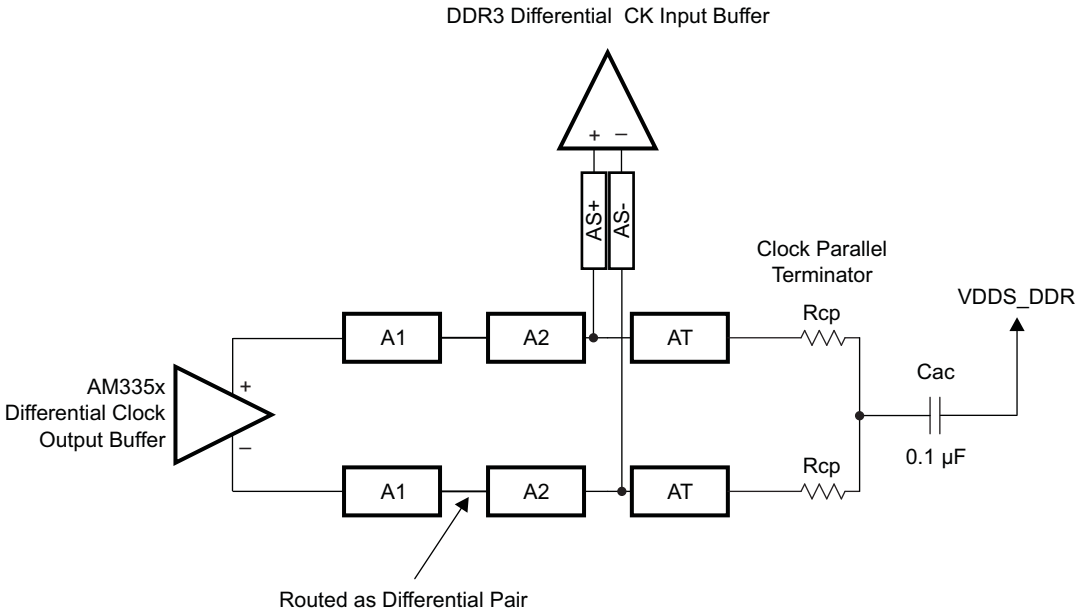

Figure 5-58. CK Topology for One DDR3 Device

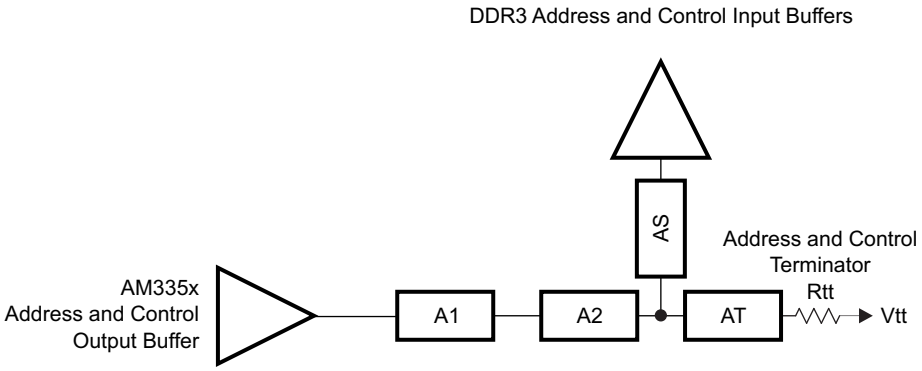

Figure 5-59. ADDR_CTRL Topology for One DDR3 Device

5.6.2.3.4.2.2 CK and ADDR_CTRL Routing, One DDR3 Device

Figure 5-60 shows the CK routing for one DDR3 device. Figure 5-61 shows the corresponding ADDR_CTRL routing.

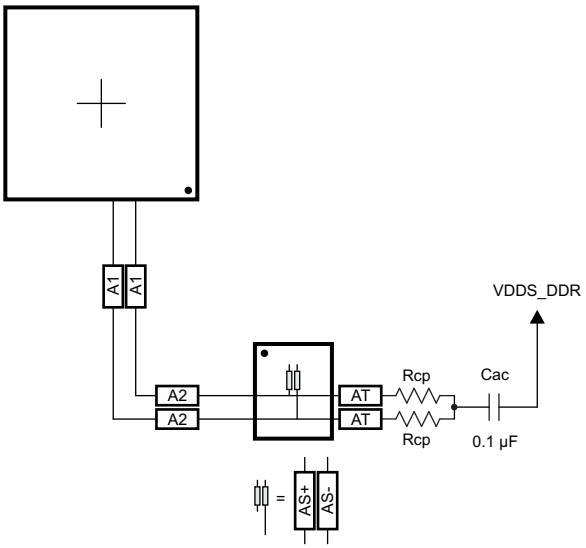

Figure 5-60. CK Routing for One DDR3 Device

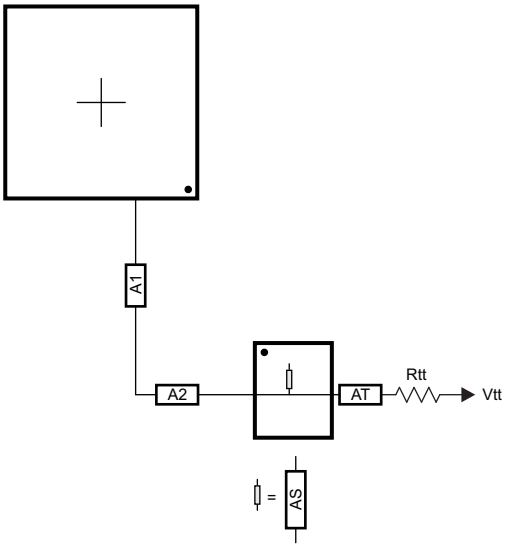

Figure 5-61. ADDR_CTRL Routing for One DDR3 Device

5.6.2.3.5 Data Topologies and Routing Definition

No matter the number of DDR3 devices used, the data line topology is always point to point, so its definition is simple.

5.6.2.3.5.1 DQS[x] and DQ[x] Topologies, Any Number of Allowed DDR3 Devices

DQS[x] lines are point-to-point differential, and DQ[x] lines are point-to-point singled ended. Figure 5-62 and Figure 5-63 show these topologies.

Copyright © 2011–2013, Texas Instruments Incorporated

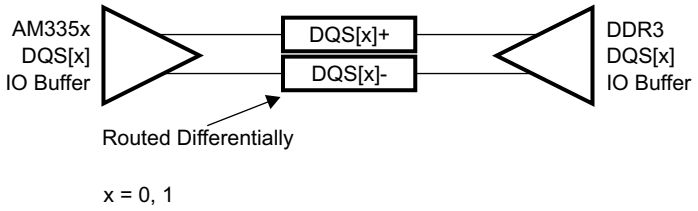

Figure 5-62. DQS[x] Topology

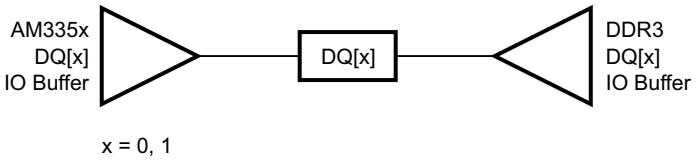

Figure 5-63. DQ[x] Topology

5.6.2.3.5.2 DQS[x] and DQ[x] Routing, Any Number of Allowed DDR3 Devices

Figure 5-64 and Figure 5-65 show the DQS[x] and DQ[x] routing.

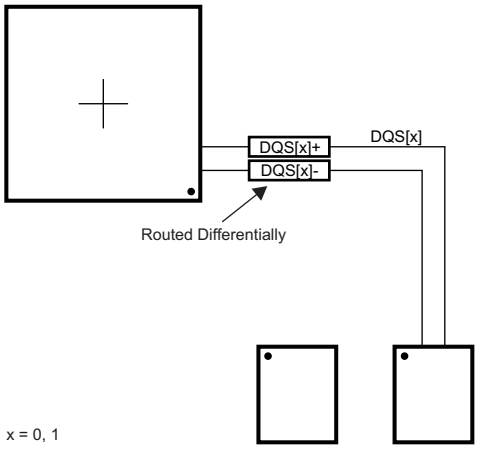

Figure 5-64. DQS[x] Routing With Any Number of Allowed DDR3 Devices

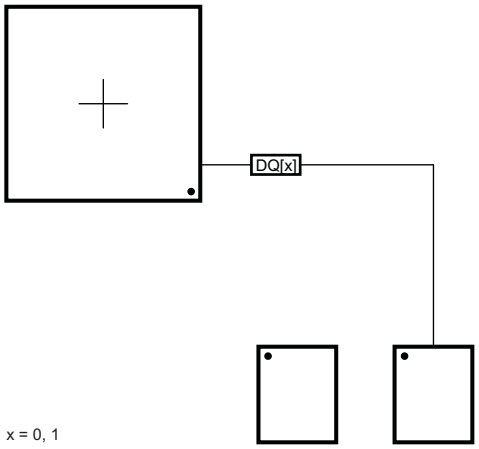

Figure 5-65. DQ[x] Routing With Any Number of Allowed DDR3 Devices

5.6.2.3.6 Routing Specification

5.6.2.3.6.1 CK and ADDR_CTRL Routing Specification

Skew within the CK and ADDR_CTRL net classes directly reduces setup and hold margin and, thus, this skew must be controlled. The only way to practically match lengths on a PCB is to lengthen the shorter traces up to the length of the longest net in the net class and its associated clock. A metric to establish this maximum length is Manhattan distance. The Manhattan distance between two points on a PCB is the length between the points when connecting them only with horizontal or vertical segments. A reasonable trace route length is to within a percentage of its Manhattan distance. CACLM is defined as Clock Address Control Longest Manhattan distance.

Given the clock and address pin locations on the AM335x device and the DDR3 memories, the maximum possible Manhattan distance can be determined given the placement. Figure 5-66 shows this distance for two loads. It is from this distance that the specifications on the lengths of the transmission lines for the address bus are determined. CACLM is determined similarly for other address bus configurations; that is, it is based on the longest net of the CK and ADDR_CTRL net class. For CK and ADDR_CTRL routing, these specifications are contained in Table 5-66.

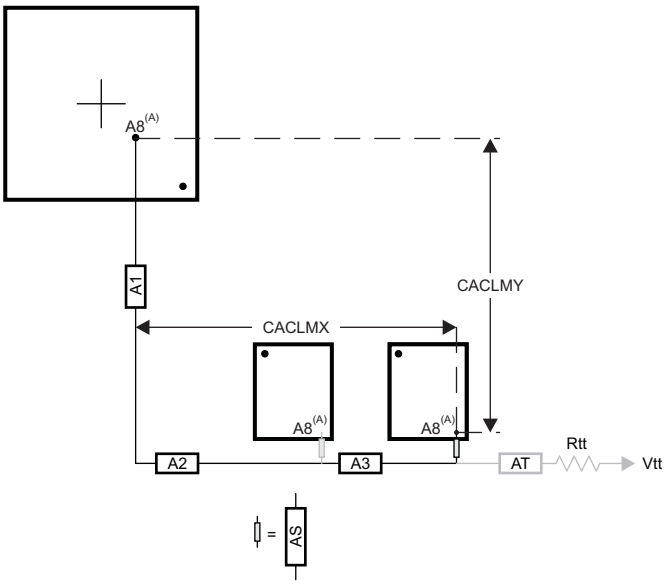

A. It is very likely that the longest CK and ADDR_CTRL Manhattan distance will be for Address Input 8 (A8) on the DDR3 memories. CACLM is based on the longest Manhattan distance due to the device placement. Verify the net class that satisfies this criteria and use as the baseline for CK and ADDR_CTRL skew matching and length control.

The length of shorter CK and ADDR_CTRL stubs as well as the length of the terminator stub are not included in this length calculation. Non-included lengths are grayed out in the figure.

Assuming A8 is the longest, CALM = CACLMY + CACLMX + 300 mils.
The extra 300 mils allows for routing down lower than the DDR3 memories and returning up to reach A8.

Figure 5-66. CACLM for Two Address Loads on One Side of PCB

Table 5-66. CK and ADDR_CTRL Routing Specification(1)(2)(3)

NO.	PARAMETER	MIN	TYP	MAX	UNIT
1	A1+A2 length			2500	mils
2	A1+A2 skew			25	mils
3	A3 length			660	mils
4	A3 skew(4)			25	mils
5	A3 skew(5)			125	mils
6	AS length			100	mils

Copyright © 2011–2013, Texas Instruments Incorporated

Table 5-66. CK and ADDR_CTRL Routing Specification(1)(2)(3) (continued)

NO.	PARAMETER	MIN	TYP	MAX	UNIT
7	AS skew			25	mils
8	AS+ and AS- length			70	mils
9	AS+ and AS- skew			5	mils
10	AT length(6)		500		mils
11	AT skew(7)		100		mils
12	AT skew(8)			5	mils
13	CK and ADDR_CTRL nominal trace length(9)	CACLM-50	CACLM	CACLM+50	mils
14	Center-to-center CK to other DDR3 trace spacing(10)	4w			
15	Center-to-center ADDR_CTRL to other DDR3 trace spacing(10)(11)	4w			
16	Center-to-center ADDR_CTRL to other ADDR_CTRL trace spacing(10)	3w			
17	CK center-to-center spacing(12)				
18	CK spacing to other net(10)	4w			
19	Rcp(13)	Zo-1	Zo	Zo+1	ohms
20	Rtt(13)(14)	Zo-5	Zo	Zo+5	ohms

(1) CK represents the clock net class, and ADDR_CTRL represents the address and control signal net class.

(2) The use of vias should be minimized.

(3) Additional bypass capacitors are required when using the VDDS_DDR plane as the reference plane to allow the return current to jump between the VDDS_DDR plane and the ground plane when the net class switches layers at a via.

(4) Mirrored configuration (one DDR3 device on top of the board and one DDR3 device on the bottom).

(5) Non-mirrored configuration (all DDR3 memories on same side of PCB).

(6) While this length can be increased for convenience, its length should be minimized.

(7) ADDR_CTRL net class only (not CK net class). Minimizing this skew is recommended, but not required.

(8) CK net class only.

(9) CACLM is the longest Manhattan distance of the CK and ADDR_CTRL net classes + 300 mils. For definition, see Section 5.6.2.3.6.1 and Figure 5-66.

(10) Center-to-center spacing is allowed to fall to minimum (w) for up to 1250 mils of routed length.

(11) Signals from one DQ net class should be considered other DDR3 traces to another DQ net class.

(12) CK spacing set to ensure proper differential impedance. Differential impedance should be Z_o x 2, where Z_o is the single-ended impedance defined in Table 5-60.

(13) Source termination (series resistor at driver) is specifically not allowed.

(14) Termination values should be uniform across the net class.

5.6.2.3.6.2 DQS[x] and DQ[x] Routing Specification

Skew within the DQS[x] and DQ[x] net classes directly reduces setup and hold margin and, thus, this skew must be controlled. The only way to practically match lengths on a PCB is to lengthen the shorter traces up to the length of the longest net in the net class and its associated clock. DQLMn is defined as DQ Longest Manhattan distance n, where n is the byte number. For a 16-bit interface, there are two DQLMs, DQLM0-DQLM1.

NOTE

It is not required, nor is it recommended, to match the lengths across all bytes. Length matching is only required within each byte.

Given the DQS[x] and DQ[x] pin locations on the AM335x device and the DDR3 memories, the maximum possible Manhattan distance can be determined given the placement. Figure 5-67 shows this distance for a two-load case. It is from this distance that the specifications on the lengths of the transmission lines for the data bus are determined. For DQS[x] and DQ[x] routing, these specifications are contained in Table 5-67.

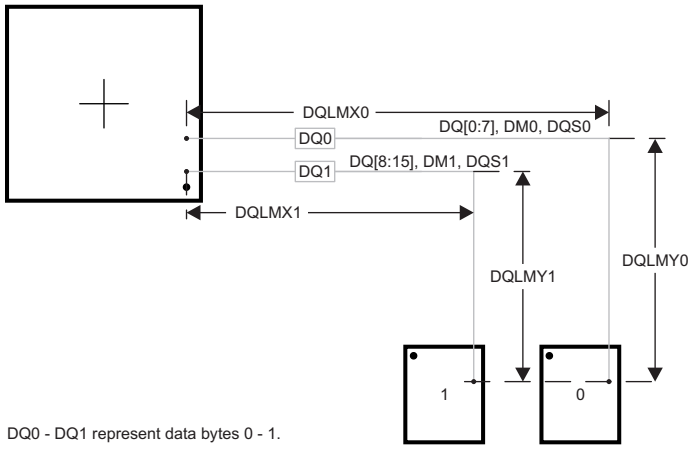

There are two DQLMs, one for each byte (16-bit interface). Each DQLM is the longest Manhattan distance of the byte; therefore:
DQLM0 = DQLMX0 + DQLMY0
DQLM1 = DQLMX1 + DQLMY1

Figure 5-67. DQLM for Any Number of Allowed DDR3 Devices

Table 5-67. DQS[x] and DQ[x] Routing Specification(1)(2)

NO.	PARAMETER	MIN	TYP	MAX	UNIT
1	DQ0 nominal length(3)(4)			DQLM0	mils
2	DQ1 nominal length(3)(5)			DQLM1	mils
3	DQ[x] skew(6)			25	mils
4	DQS[x] skew			5	mils
5	DQS[x]-to-DQ[x] skew(6)(7)			25	mils
6	Center-to-center DQ[x] to other DDR3 trace spacing(8)(9)	4w			
7	Center-to-center DQ[x] to other DQ[x] trace spacing(8)(10)	3w			
8	DQS[x] center-to-center spacing(11)				
9	DQS[x] center-to-center spacing to other net(8)	4w			

(1) DQS[x] represents the DQS0 and DQS1 clock net classes, and DQ[x] represents the DQ0 and DQ1 signal net classes.
(2) External termination disallowed. Data termination should use built-in ODT functionality.
(3) DQLMn is the longest Manhattan distance of a byte. For definition, see Section 5.6.2.3.6.2 and Figure 5-67.
(4) DQLM0 is the longest Manhattan length for the DQ0 net class.
(5) DQLM1 is the longest Manhattan length for the DQ1 net class.
(6) Length matching is only done within a byte. Length matching across bytes is not required.
(7) Each DQS clock net class is length matched to its associated DQ signal net class.
(8) Center-to-center spacing is allowed to fall to minimum for up to 1250 mils of routed length.
(9) Other DDR3 trace spacing means signals that are not part of the same DQ[x] signal net class.
(10) This applies to spacing within same DQ[x] signal net class.
(11) DQS[x] pair spacing is set to ensure proper differential impedance. Differential impedance should be Z_o x 2, where Z_o is the single-ended impedance defined in Table 5-60.

Copyright © 2011–2013, Texas Instruments Incorporated

5.7 Inter-Integrated Circuit (I2C)

For more information, see the Inter-Integrated Circuit (I2C) section of the *AM335x ARM Cortex-A8 Microprocessors (MPUs) Technical Reference Manual* (literature number SPRUH73).

5.7.1 I2C Electrical Data and Timing

Table 5-68. I2C Timing Conditions - Slave Mode

TIMING CONDITION PARAMETER		STANDARD MODE		FAST MODE		UNIT
		MIN	MAX	MIN	MAX	
Output Condition						
C_b	Capacitive load for each bus line		400		400	pF

Table 5-69. Timing Requirements for I2C Input Timings

(see Figure 5-68)

NO.			STANDARD MODE		FAST MODE		UNIT
			MIN	MAX	MIN	MAX	
1	$t_{c(SCL)}$	Cycle time, SCL	10		2.5		us
2	$t_{su(SCLH-SDAL)}$	Setup Time, SCL high before SDA low (for a repeated START condition)	4.7		0.6		us
3	$t_{h(SDAL-SCLL)}$	Hold time, SCL low after SDA low (for a START and a repeated START condition)	4		0.6		us
4	$t_{w(SCLL)}$	Pulse duration, SCL low	4.7		1.3		us
5	$t_{w(SCLH)}$	Pulse duration, SCL high	4		0.6		us
6	$t_{su(SDAV-SCLH)}$	Setup time, SDA valid before SCL high	250		100(1)		ns
7	$t_{h(SCLL-SDAV)}$	Hold time, SDA valid after SCL low	0(2)	3.45(3)	0(2)	0.9(3)	us
8	$t_{w(SDAH)}$	Pulse duration, SDA high between STOP and START conditions	4.7		1.3		us
9	$t_{r(SDA)}$	Rise time, SDA		1000		300	ns
10	$t_{r(SCL)}$	Rise time, SCL		1000		300	ns
11	$t_{f(SDA)}$	Fall time, SDA		300		300	ns
12	$t_{f(SCL)}$	Fall time, SCL		300		300	ns
13	$t_{su(SCLH-SDAH)}$	Setup time, high before SDA high (for STOP condition)	4		0.6		us
14	$t_{w(SP)}$	Pulse duration, spike (must be suppressed)	0	50	0	50	ns

(1) A fast-mode I2C-bus™ device can be used in a standard-mode I2C-bus system, but the requirement $t_{su(SDA-SCLH)} \geq 250$ ns must then be met. This is automatically the case if the device does not stretch the LOW period of the SCL signal. If such a device stretches the LOW period of the SCL signal, it must output the next data bit to the SDA line $t_{r\ max} + t_{su(SDA-SCLH)} = 1000 + 250 = 1250$ ns (according to the standard-mode I2C-Bus Specification) before the SCL line is released.

(2) A device must internally provide a hold time of at least 300 ns for the SDA signal (referred to the V_{IHmin} of the SCL signal) to bridge the undefined region of the falling edge of SCL.

(3) The maximum $t_{h(SDA-SCLL)}$ has only to be met if the device does not stretch the low period [$t_{w(SCLL)}$] of the SCL signal.

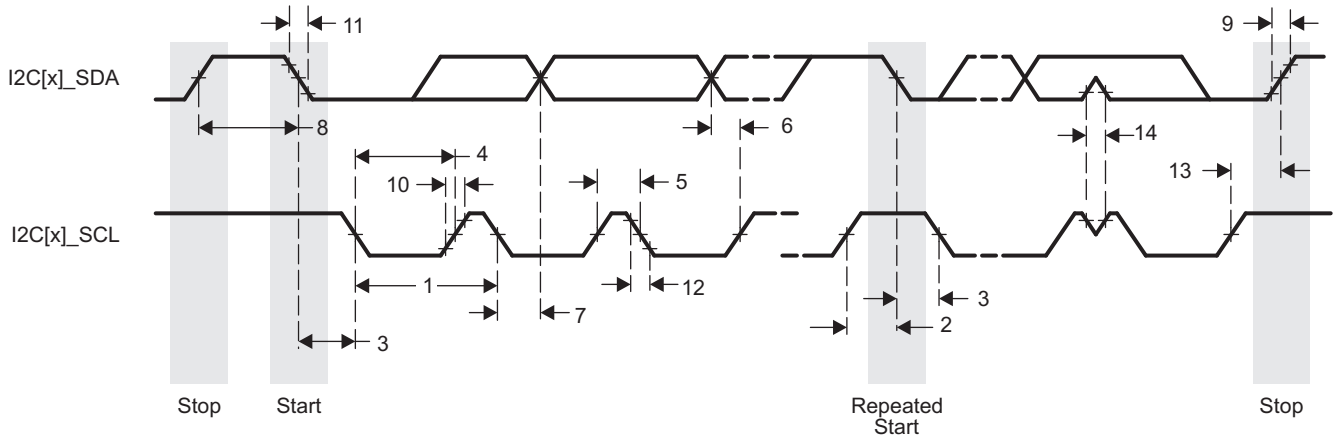

Figure 5-68. I2C Receive Timing

Table 5-70. Switching Characteristics for I2C Output Timings

(see Figure 5-69)

NO.	PARAMETER		STANDARD MODE		FAST MODE		UNIT
			MIN	MAX	MIN	MAX	
15	$t_{c(SCL)}$	Cycle time, SCL	10		2.5		us
16	$t_{su(SCLH-SDAL)}$	Setup Time, SCL high before SDA low (for a repeated START condition)	4.7		0.6		us
17	$t_{h(SDAL-SCLL)}$	Hold time, SCL low after SDA low (for a START and a repeated START condition)	4		0.6		us
18	$t_{w(SCLL)}$	Pulse duration, SCL low	4.7		1.3		us
19	$t_{w(SCLH)}$	Pulse duration, SCL high	4		0.6		us
20	$t_{su(SDAV-SCLH)}$	Setup time, SDA valid before SCL high	250		100		ns
21	$t_{h(SCLL-SDAV)}$	Hold time, SDA valid after SCL low	0	3.45	0	0.9	us
22	$t_{w(SDAH)}$	Pulse duration, SDA high between STOP and START conditions	4.7		1.3		us
23	$t_{r(SDA)}$	Rise time, SDA		1000		300	ns
24	$t_{r(SCL)}$	Rise time, SCL		1000		300	ns
25	$t_{f(SDA)}$	Fall time, SDA		300		300	ns
26	$t_{f(SCL)}$	Fall time, SCL		300		300	ns
27	$t_{su(SCLH-SDAH)}$	Setup time, high before SDA high (for STOP condition)	4		0.6		us

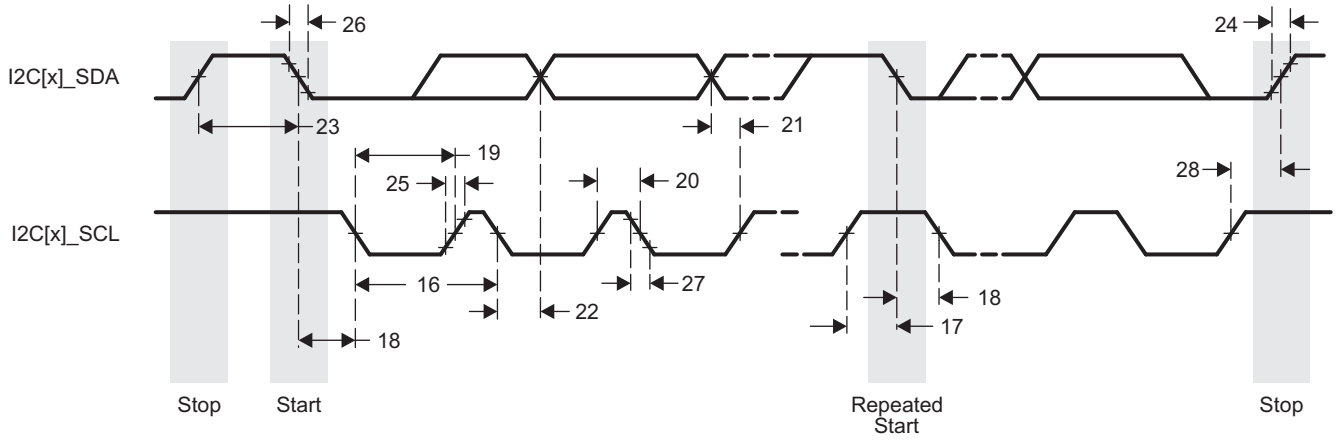

Figure 5-69. I2C Transmit Timing

Copyright © 2011–2013, Texas Instruments Incorporated

5.8 JTAG Electrical Data and Timing

Table 5-71. Timing Requirements for JTAG

(see Figure 5-70)

NO.			OPP100		OPP50		UNIT
			MIN	MAX	MIN	MAX	
1	$t_{c(TCK)}$	Cycle time, TCK	81.5		104.5		ns
1a	$t_{w(TCKH)}$	Pulse duration, TCK high (40% of t_c)	32.6		41.8		ns
1b	$t_{w(TCKL)}$	Pulse duration, TCK low (40% of t_c)	32.6		41.8		ns
3	$t_{su(TDI-TCKH)}$	Input setup time, TDI valid to TCK high	3		3		ns
	$t_{su(TMS-TCKH)}$	Input setup time, TMS valid to TCK high	3		3		ns
4	$t_{h(TCKH-TDI)}$	Input hold time, TDI valid from TCK high	8.05		8.05		ns
	$t_{h(TCKH-TMS)}$	Input hold time, TMS valid from TCK high	8.05		8.05		ns

Table 5-72. Switching Characteristics for JTAG

(see Figure 5-70)

NO.	PARAMETER		OPP100		OPP50		UNIT
			MIN	MAX	MIN	MAX	
2	$t_{d(TCKL-TDO)}$	Delay time, TCK low to TDO valid	3	27.6	4	36.8	ns

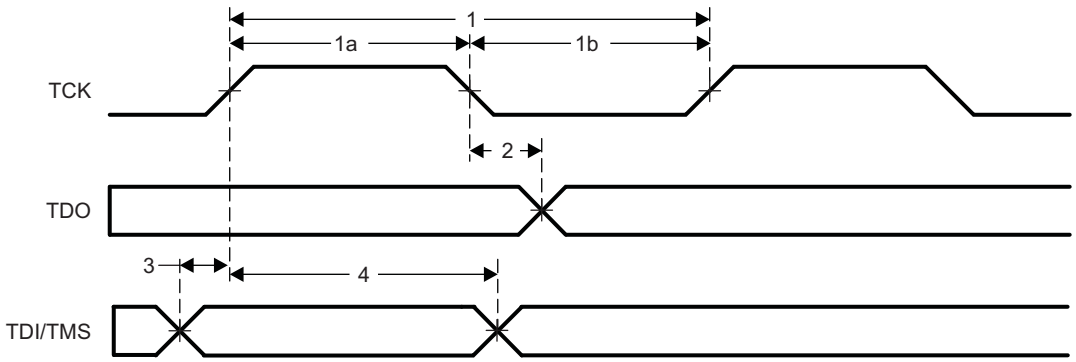

Figure 5-70. JTAG Timing

5.9 LCD Controller (LCDC)

The LCD controller consists of two independent controllers, the raster controller and the LCD interface display driver (LIDD) controller. Each controller operates independently from the other and only one of them is active at any given time.

- The raster controller handles the synchronous LCD interface. It provides timing and data for constant graphics refresh to a passive display. It supports a wide variety of monochrome and full-color display types and sizes by use of programmable timing controls, a built-in palette, and a gray-scale and serializer. Graphics data is processed and stored in frame buffers. A frame buffer is a contiguous memory block in the system. A built-in DMA engine supplies the graphics data to the raster engine which, in turn, outputs to the external LCD device.
- The LIDD controller supports the asynchronous LCD interface. It provides full-timing programmability of control signals (CS, WE, OE, ALE) and output data.

The maximum resolution for the LCD controller is 2048 x 2048 pixels. The maximum frame rate is determined by the image size in combination with the pixel clock rate.

Table 5-73. LCD Controller Timing Conditions

TIMING CONDITION PARAMETER			MIN	TYP	MAX	UNIT
Output Condition						
C_{LOAD}	Output load capacitance	LIDD mode	5		60	pF
		Raster mode	3		30	pF

5.9.1 LCD Interface Display Driver (LIDD Mode)

Table 5-74. Timing Requirements for LCD LIDD Mode

(see Figure 5-72 through Figure 5-80)

NO.	PARAMETER		OPP100		UNIT
			MIN	MAX	
16	$t_{su(LCD_DATA-LCD_MEMORY_CLK)}$	Setup time, LCD_DATA[15:0] valid before LCD_MEMORY_CLK high	18		ns
17	$t_{h(LCD_MEMORY_CLK-LCD_DATA)}$	Hold time, LCD_DATA[15:0] valid after LCD_MEMORY_CLK high	0		ns
18	$t_{t(LCD_DATA)}$	Transition time, LCD_DATA[15:0]	1	3	ns

Table 5-75. Switching Characteristics for LCD LIDD Mode

(see Figure 5-72 through Figure 5-80)

NO.	PARAMETER		OPP100		UNIT
			MIN	MAX	
1	$t_{c(LCD_MEMORY_CLK)}$	Cycle time, LCD_MEMORY_CLK	23.7		ns
2	$t_{w(LCD_MEMORY_CLKH)}$	Pulse duration, LCD_MEMORY_CLK high	$0.45t_c$	$0.55t_c$	ns
3	$t_{w(LCD_MEMORY_CLKL)}$	Pulse duration, LCD_MEMORY_CLK low	$0.45t_c$	$0.55t_c$	ns
4	$t_{d(LCD_MEMORY_CLK-LCD_DATAV)}$	Delay time, LCD_MEMORY_CLK high to LCD_DATA[15:0] valid (write)		7	ns
5	$t_{d(LCD_MEMORY_CLK-LCD_DATAI)}$	Delay time, LCD_MEMORY_CLK high to LCD_DATA[15:0] invalid (write)	0		ns
6	$t_{d(LCD_MEMORY_CLK-LCD_AC_BIAS_EN)}$	Delay time, LCD_MEMORY_CLK high to LCD_AC_BIAS_EN	0	6.8	ns
7	$t_{t(LCD_AC_BIAS_EN)}$	Transition time, LCD_AC_BIAS_EN	1	10	ns
8	$t_{d(LCD_MEMORY_CLK-LCD_VSYNC)}$	Delay time, LCD_MEMORY_CLK high to LCD_VSYNC	0	7	ns
9	$t_{t(LCD_VSYNC)}$	Transition time, LCD_VSYNC	1	10	ns
10	$t_{d(LCD_MEMORY_CLK-LCD_HYSNC)}$	Delay time, LCD_MEMORY_CLK high to LCD_HSYNC	0	7	ns

Copyright © 2011–2013, Texas Instruments Incorporated

Table 5-75. Switching Characteristics for LCD LIDD Mode (continued)

(see Figure 5-72 through Figure 5-80)

NO.	PARAMETER		OPP100		UNIT
			MIN	MAX	
11	$t_{t(LCD_HSYNC)}$	Transition time, LCD_HYSNC	1	10	ns
12	$t_{d(LCD_MEMORY_CLK-LCD_PCLK)}$	Delay time, LCD_MEMORY_CLK high to LCD_PCLK	0	7	ns
13	$t_{t(LCD_PCLK)}$	Transition time, LCD_PCLK	1	10	ns
14	$t_{d(LCD_MEMORY_CLK-LCD_DATAZ)}$	Delay time, LCD_MEMORY_CLK high to LCD_DATA[15:0] high-Z	0	7	ns
15	$t_{d(LCD_MEMORY_CLK-LCD_DATA)}$	Delay time, LCD_MEMORY_CLK high to LCD_DATA[15:0] driven	0	7	ns
19	$t_{t(LCD_MEMORY_CLK)}$	Transition time, LCD_MEMORY_CLK	1	2.5	ns
20	$t_{t(LCD_DATA)}$	Transition time, LCD_DATA	1	10	ns

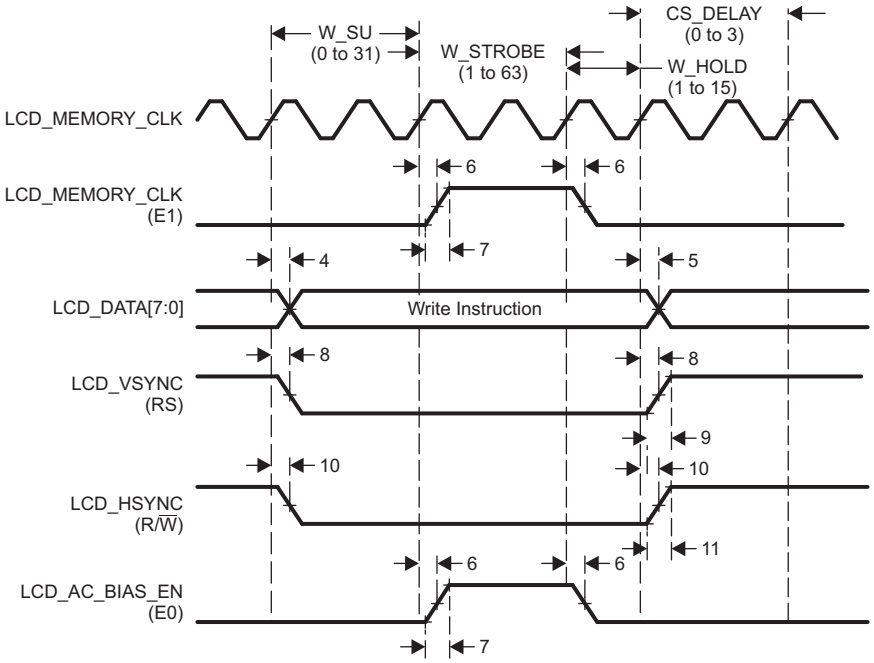

A. Hitachi mode performs asynchronous operations that do not require an external LCD_MEMORY_CLK. The first LCD_MEMORY_CLK waveform is only shown as a reference of the internal clock that sequences the other signals. The second LCD_MEMORY_CLK waveform is shown as E1 since the LCD_MEMORY_CLK signal is used to implement the E1 function in Hitachi mode.

Figure 5-71. Command Write in Hitachi Mode

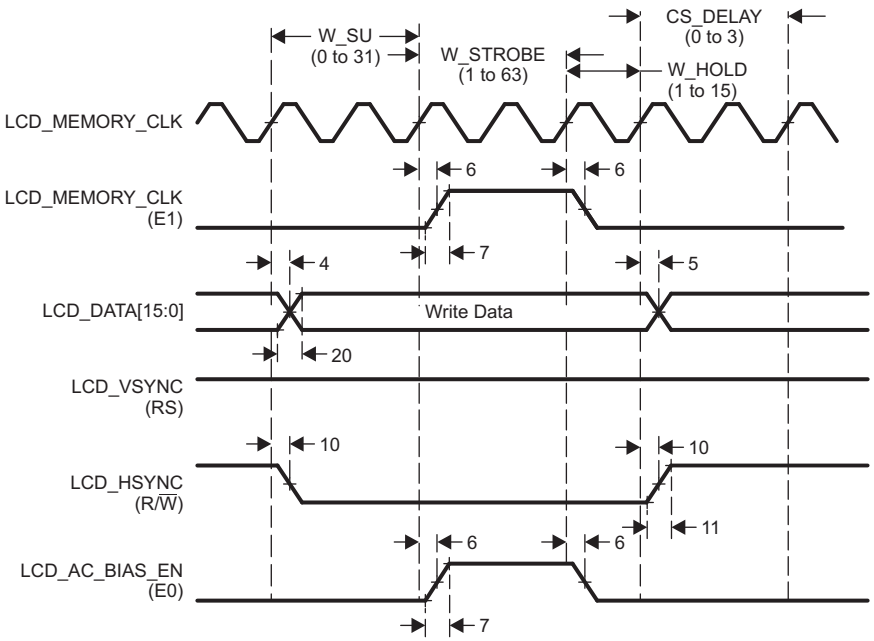

A. Hitachi mode performs asynchronous operations that do not require an external LCD_MEMORY_CLK. The first LCD_MEMORY_CLK waveform is only shown as a reference of the internal clock that sequences the other signals. The second LCD_MEMORY_CLK waveform is shown as E1 since the LCD_MEMORY_CLK signal is used to implement the E1 function in Hitachi mode.

Figure 5-72. Data Write in Hitachi Mode

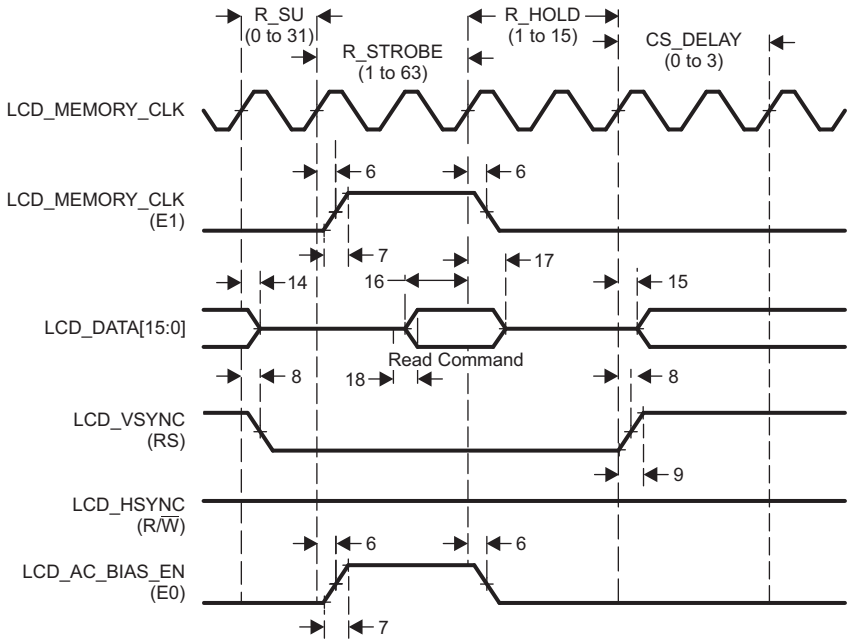

A. Hitachi mode performs asynchronous operations that do not require an external LCD_MEMORY_CLK. The first LCD_MEMORY_CLK waveform is only shown as a reference of the internal clock that sequences the other signals. The second LCD_MEMORY_CLK waveform is shown as E1 since the LCD_MEMORY_CLK signal is used to implement the E1 function in Hitachi mode.

Figure 5-73. Command Read in Hitachi Mode

Copyright © 2011–2013, Texas Instruments Incorporated

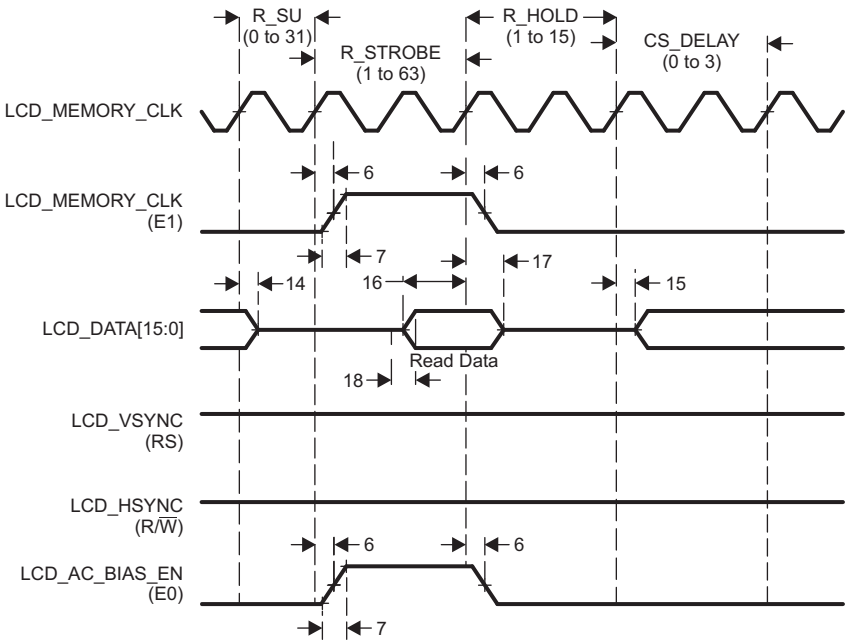

A. Hitachi mode performs asynchronous operations that do not require an external LCD_MEMORY_CLK. The first LCD_MEMORY_CLK waveform is only shown as a reference of the internal clock that sequences the other signals. The second LCD_MEMORY_CLK waveform is shown as E1 since the LCD_MEMORY_CLK signal is used to implement the E1 function in Hitachi mode.

Figure 5-74. Data Read in Hitachi Mode

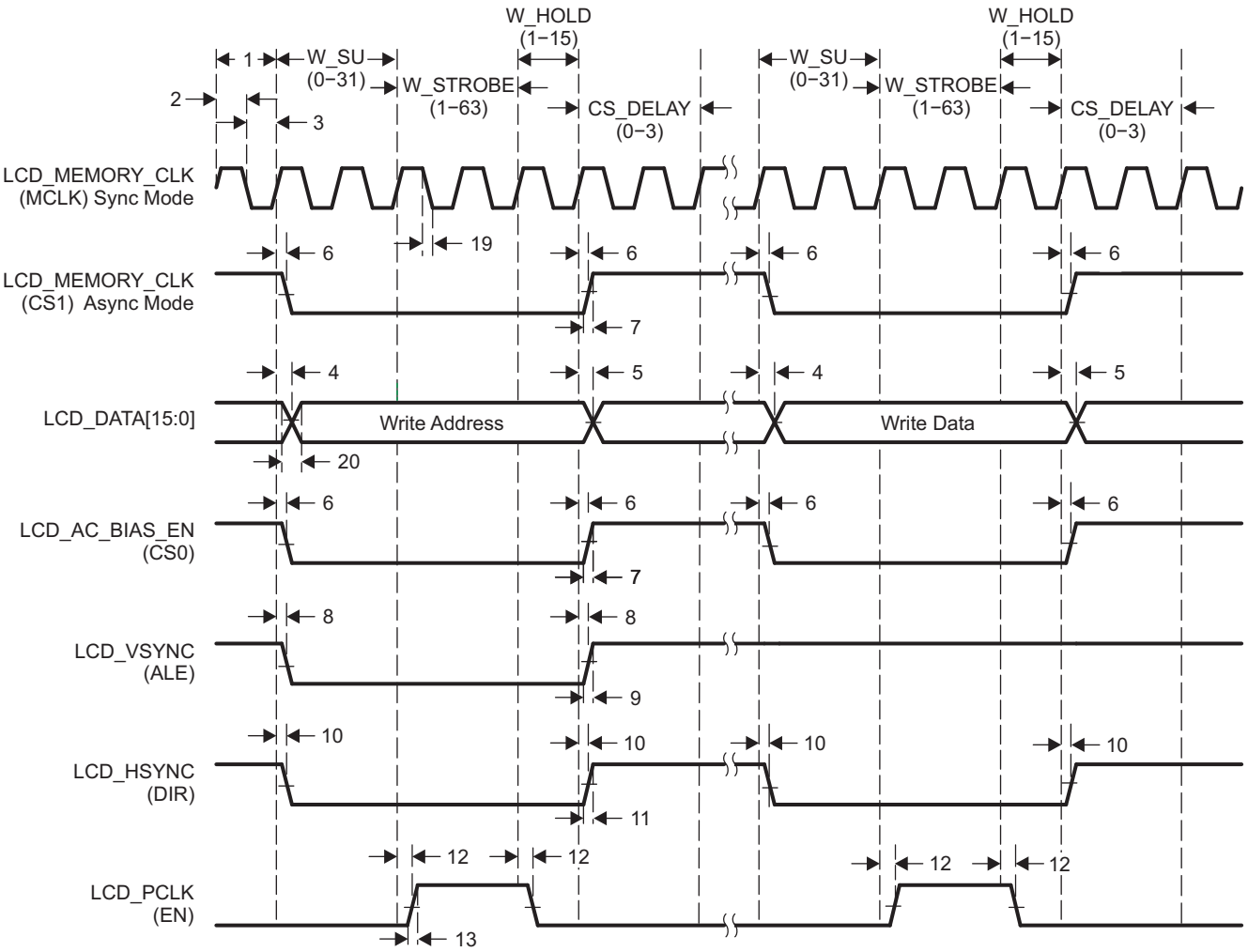

A. Motorola mode can be configured to perform asynchronous operations or synchronous operations. When configured in asynchronous mode, LCD_MEMORY_CLK is not required, so it performs the CS1 function. When configured in synchronous mode, LCD_MEMORY_CLK performs the MCLK function. LCD_MEMORY_CLK is also shown as a reference of the internal clock that sequences the other signals.

Figure 5-75. Micro-Interface Graphic Display Motorola Write

Copyright © 2011–2013, Texas Instruments Incorporated

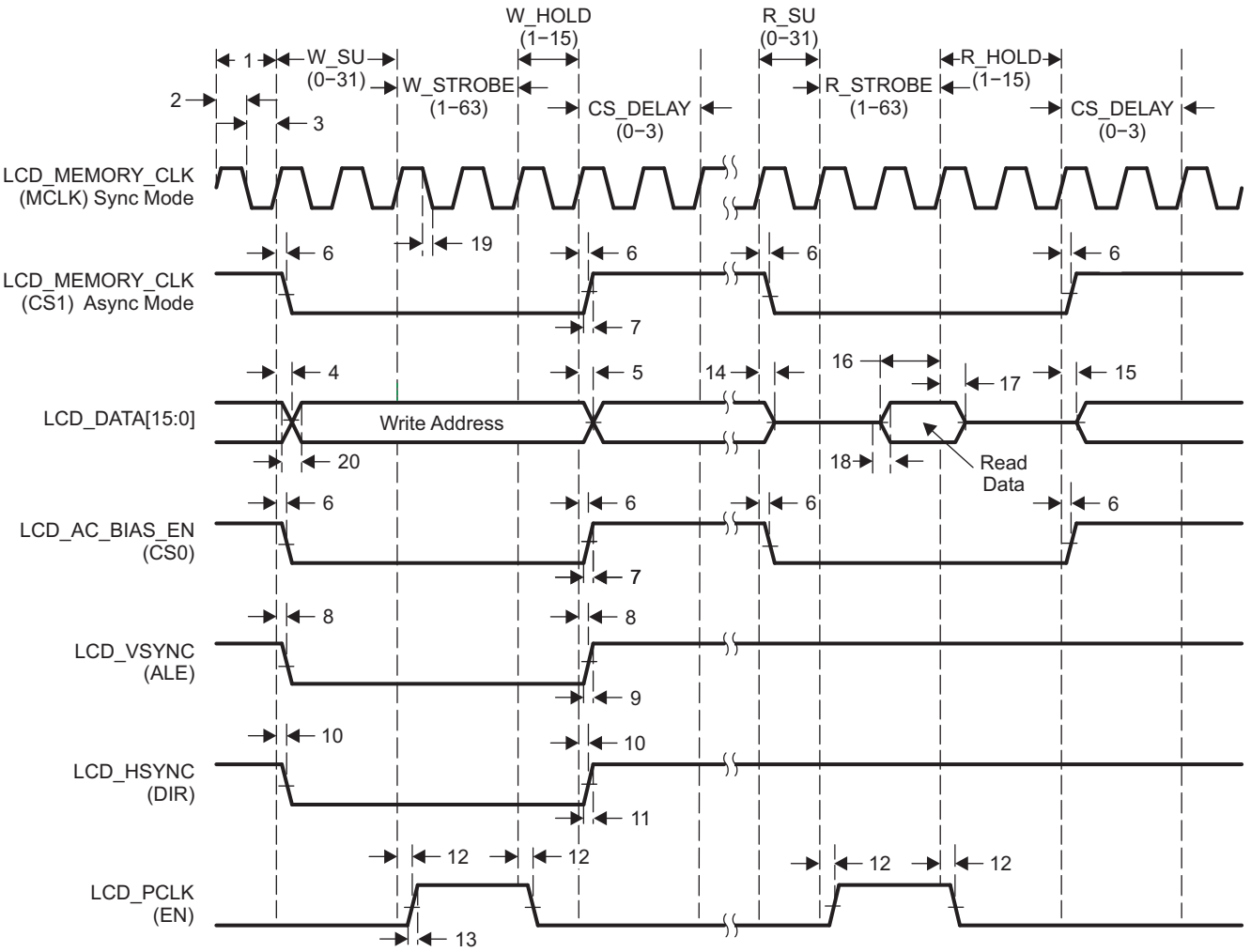

A. Motorola mode can be configured to perform asynchronous operations or synchronous operations. When configured in asynchronous mode, LCD_MEMORY_CLK is not required, so it performs the CS1 function. When configured in synchronous mode, LCD_MEMORY_CLK performs the MCLK function. LCD_MEMORY_CLK is also shown as a reference of the internal clock that sequences the other signals.

Figure 5-76. Micro-Interface Graphic Display Motorola Read

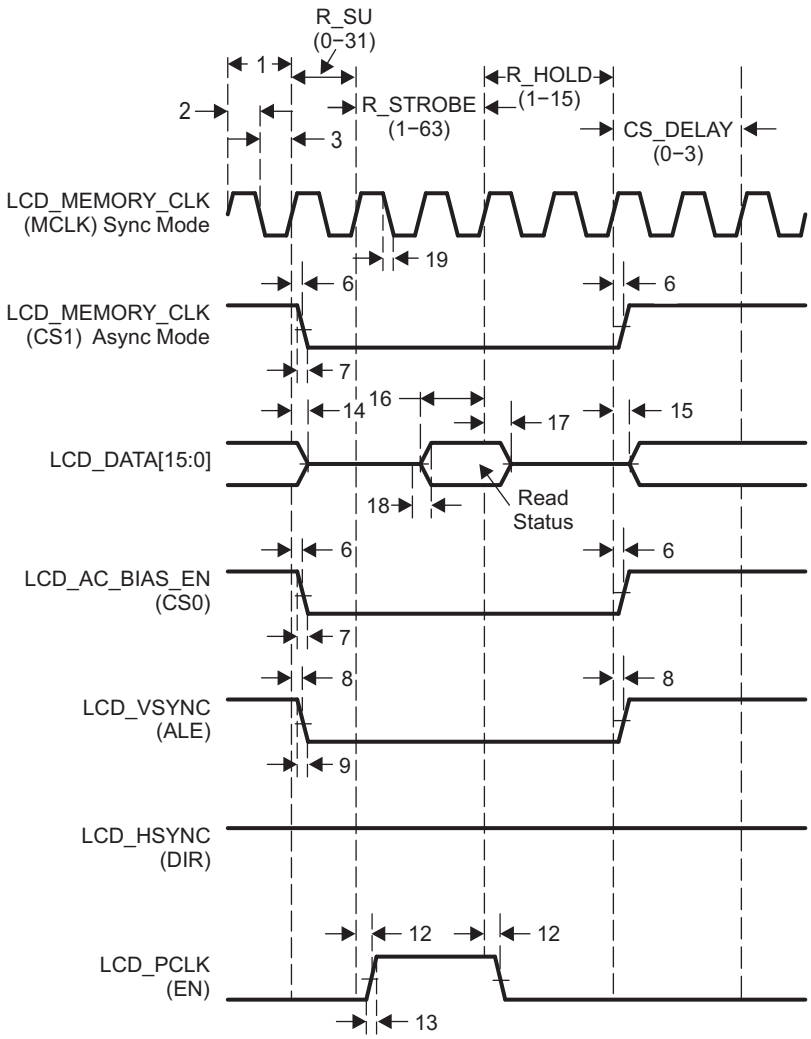

A. Motorola mode can be configured to perform asynchronous operations or synchronous operations. When configured in asynchronous mode, LCD_MEMORY_CLK is not required, so it performs the CS1 function. When configured in synchronous mode, LCD_MEMORY_CLK performs the MCLK function. LCD_MEMORY_CLK is also shown as a reference of the internal clock that sequences the other signals.

Figure 5-77. Micro-Interface Graphic Display Motorola Status

Copyright © 2011–2013, Texas Instruments Incorporated

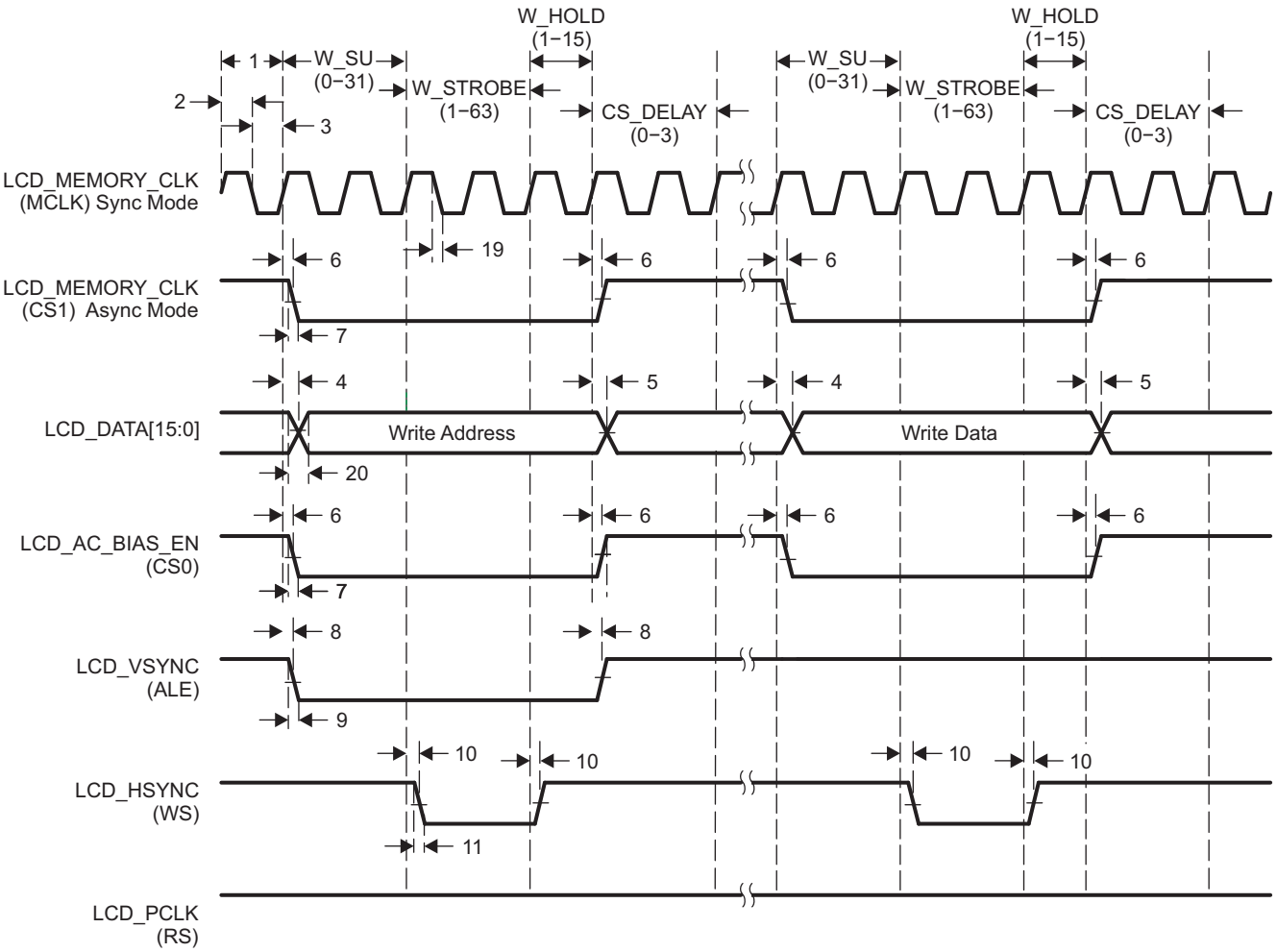

A. Intel mode can be configured to perform asynchronous operations or synchronous operations. When configured in asynchronous mode, LCD_MEMORY_CLK is not required, so it performs the CS1 function. When configured in synchronous mode, LCD_MEMORY_CLK performs the MCLK function. LCD_MEMORY_CLK is also shown as a reference of the internal clock that sequences the other signals.

Figure 5-78. Micro-Interface Graphic Display Intel Write

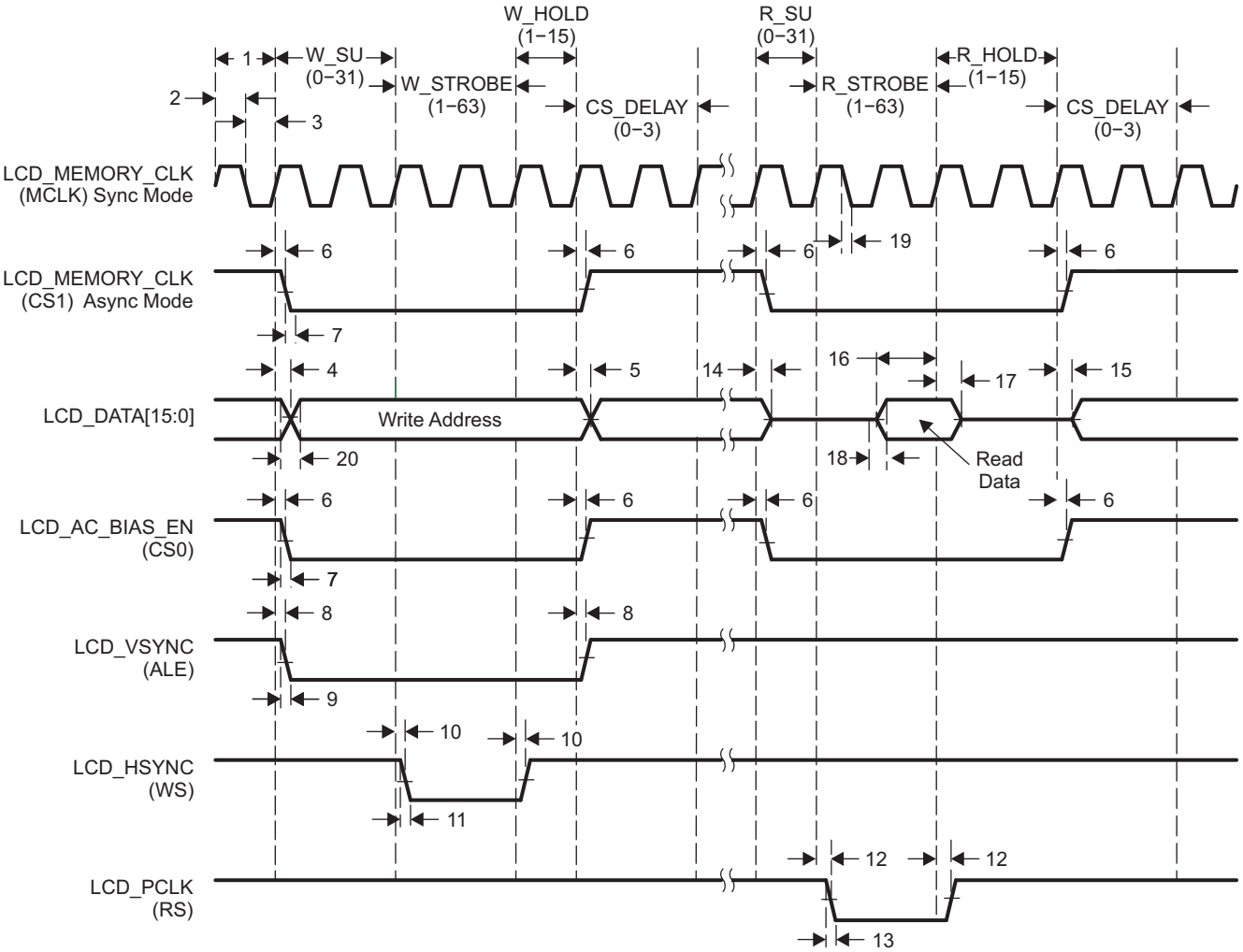

A. Intel mode can be configured to perform asynchronous operations or synchronous operations. When configured in asynchronous mode, LCD_MEMORY_CLK is not required, so it performs the CS1 function. When configured in synchronous mode, LCD_MEMORY_CLK performs the MCLK function. LCD_MEMORY_CLK is also shown as a reference of the internal clock that sequences the other signals.

Figure 5-79. Micro-Interface Graphic Display Intel Read

Copyright © 2011–2013, Texas Instruments Incorporated

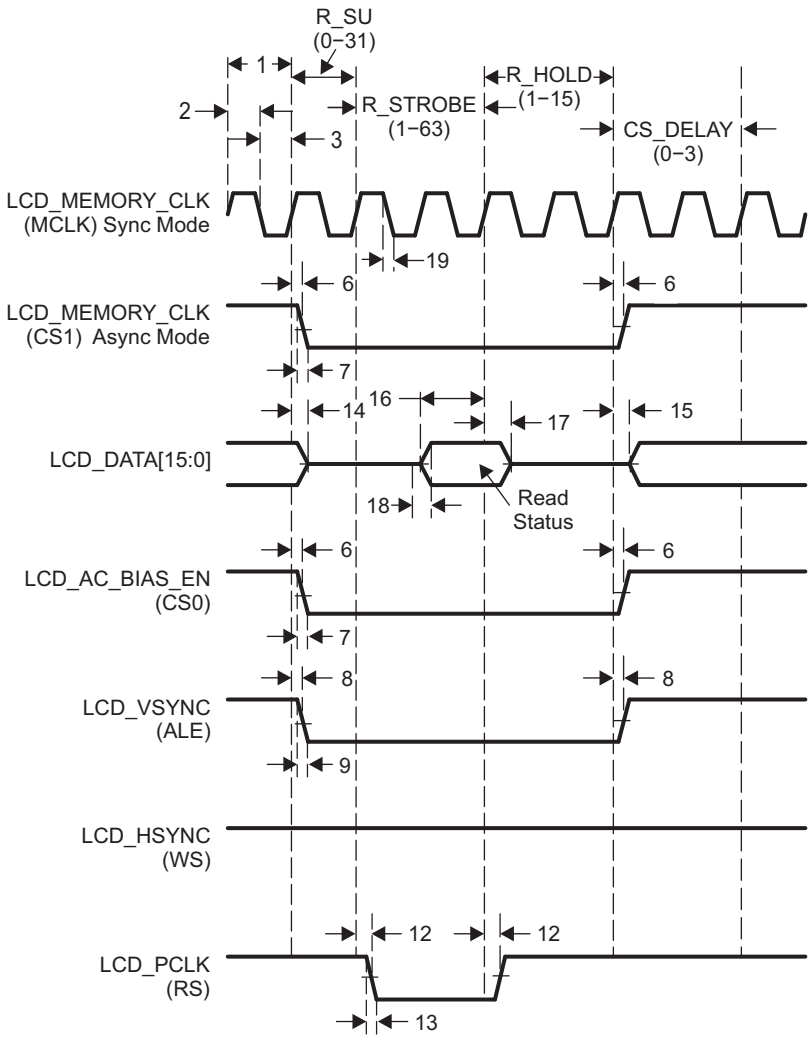

A. Intel mode can be configured to perform asynchronous operations or synchronous operations. When configured in asynchronous mode, LCD_MEMORY_CLK is not required, so it performs the CS1 function. When configured in synchronous mode, LCD_MEMORY_CLK performs the MCLK function. LCD_MEMORY_CLK is also shown as a reference of the internal clock that sequences the other signals.

Figure 5-80. Micro-Interface Graphic Display Intel Status

5.9.2 LCD Raster Mode

Table 5-76. Switching Characteristics for LCD Raster Mode

(see Figure 5-82 through Figure 5-85)

NO.	PARAMETER		OPP50		OPP100		UNIT
			MIN	MAX	MIN	MAX	
1	$t_{c(LCD_PCLK)}$	Cycle time, pixel clock	15.8		7.9		ns
2	$t_{w(LCD_PCLKH)}$	Pulse duration, pixel clock high	$0.45t_c$	$0.55t_c$	$0.45t_c$	$0.55t_c$	ns
3	$t_{w(LCD_PCLKL)}$	Pulse duration, pixel clock low	$0.45t_c$	$0.55t_c$	$0.45t_c$	$0.55t_c$	ns
4	$t_{d(LCD_PCLK-LCD_DATAV)}$	Delay time, LCD_PCLK to LCD_DATA[23:0] valid (write)		3.0		1.9	ns
5	$t_{d(LCD_PCLK-LCD_DATAI)}$	Delay time, LCD_PCLK to LCD_DATA[23:0] invalid (write)	-3.0		-1.7		ns
6	$t_{d(LCD_PCLK-LCD_AC_BIAS_EN)}$	Delay time, LCD_PCLK to LCD_AC_BIAS_EN	-3.0	3.0	-1.7	1.9	ns
7	$t_{t(LCD_AC_BIAS_EN)}$	Transition time, LCD_AC_BIAS_EN	0.5	2.4	0.5	2.4	ns
8	$t_{d(LCD_PCLK-LCD_VSYNC)}$	Delay time, LCD_PCLK to LCD_VSYNC	-3.0	3.0	-1.7	1.9	ns
9	$t_{t(LCD_VSYNC)}$	Transition time, LCD_VSYNC	0.5	2.4	0.5	2.4	ns
10	$t_{d(LCD_PCLK-LCD_HSYNC)}$	Delay time, LCD_PCLK to LCD_HSYNC	-3.0	3.0	-1.7	1.9	ns
11	$t_{t(LCD_HSYNC)}$	Transition time, LCD_HSYNC	0.5	2.4	0.5	2.4	ns
12	$t_{t(LCD_PCLK)}$	Transition time, LCD_PCLK	0.5	2.4	0.5	2.4	ns
13	$t_{t(LCD_DATA)}$	Transition time, LCD_DATA	0.5	2.4	0.5	2.4	ns

Frame-to-frame timing is derived through the following parameters in the LCD (RASTER_TIMING_1) register:

- Vertical front porch (VFP)
- Vertical sync pulse width (VSW)
- Vertical back porch (VBP)
- Lines per panel (LPP_B10 + LPP)

Line-to-line timing is derived through the following parameters in the LCD (RASTER_TIMING_0) register:

- Horizontal front porch (HFP)
- Horizontal sync pulse width (HSW)
- Horizontal back porch (HBP)
- Pixels per panel (PPLMSB + PPLLSB)

LCD_AC_BIAS_EN timing is derived through the following parameter in the LCD (RASTER_TIMING_2) register:

- AC bias frequency (ACB)

The display format produced in raster mode is shown in Figure 5-81. An entire frame is delivered one line at a time. The first line delivered starts at data pixel (1, 1) and ends at data pixel (P, 1). The last line delivered starts at data pixel (1, L) and ends at data pixel (P, L). The beginning of each new frame is denoted by the activation of IO signal LCD_VSYNC. The beginning of each new line is denoted by the activation of IO signal LCD_HSYNC.

Copyright © 2011–2013, Texas Instruments Incorporated

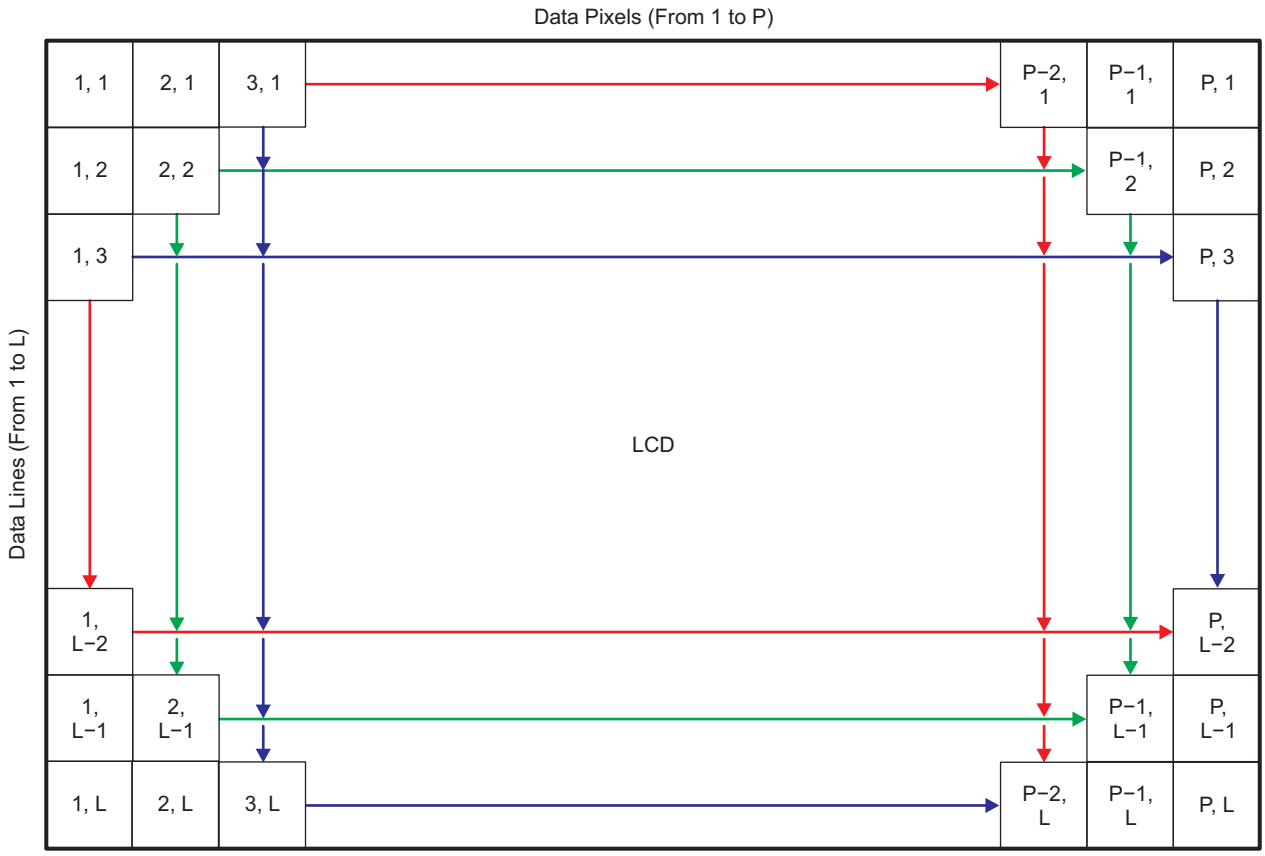

Figure 5-81. LCD Raster-Mode Display Format

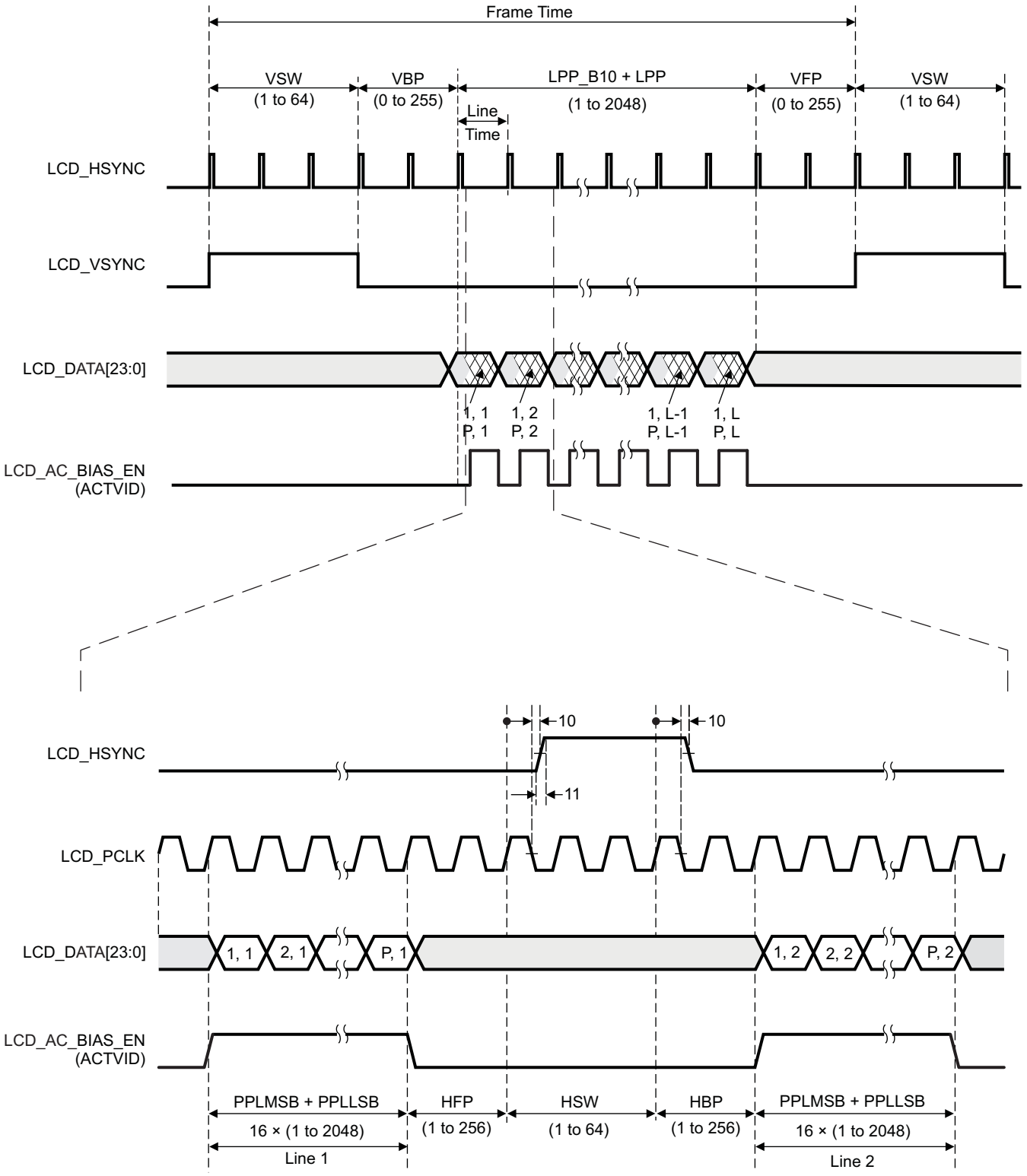

Figure 5-82. LCD Raster-Mode Active

Copyright © 2011–2013, Texas Instruments Incorporated

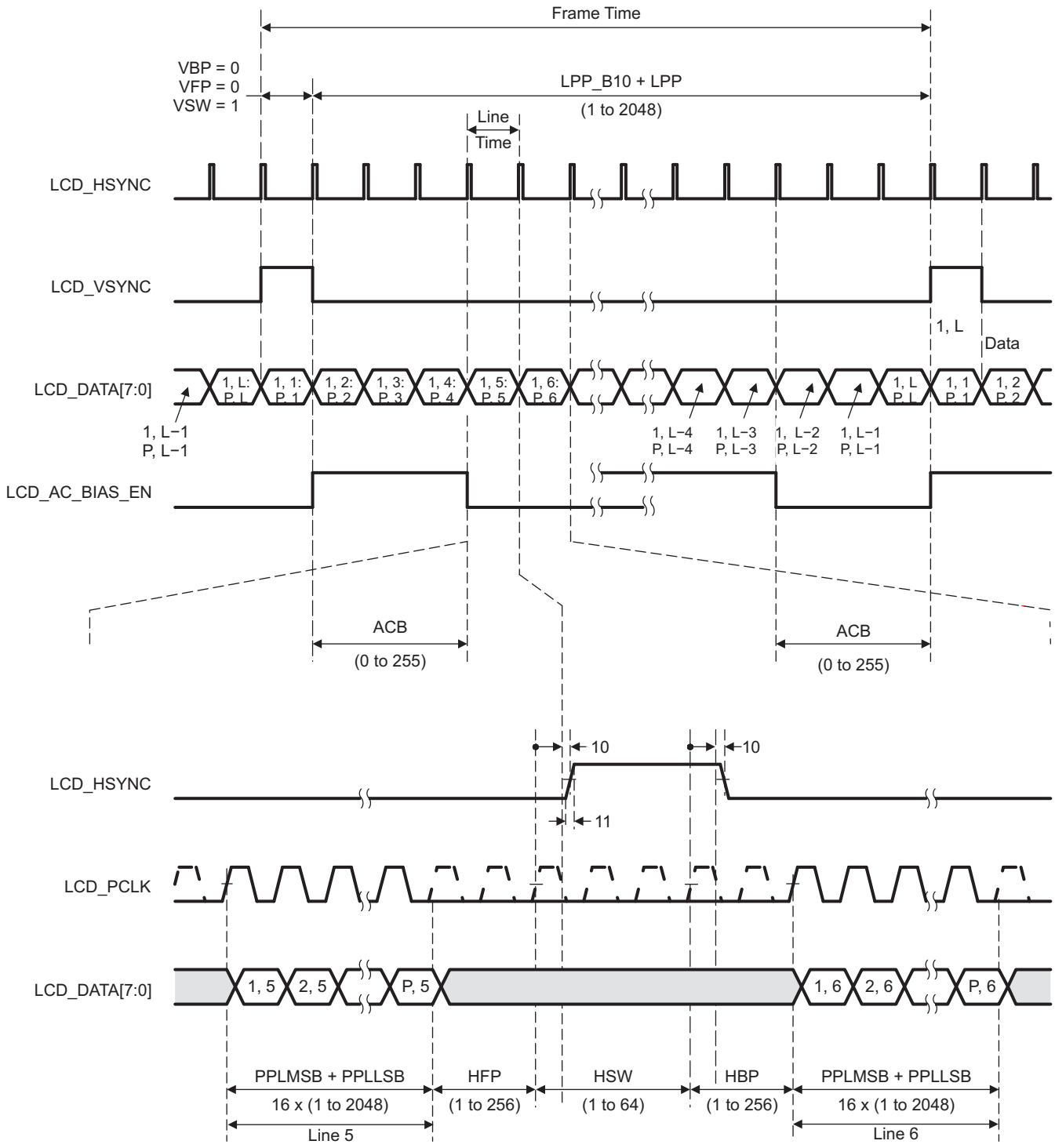

A. The dashed portion of LCD_PCLK is only shown as a reference of the internal clock that sequences the other signals.

Figure 5-83. LCD Raster-Mode Passive

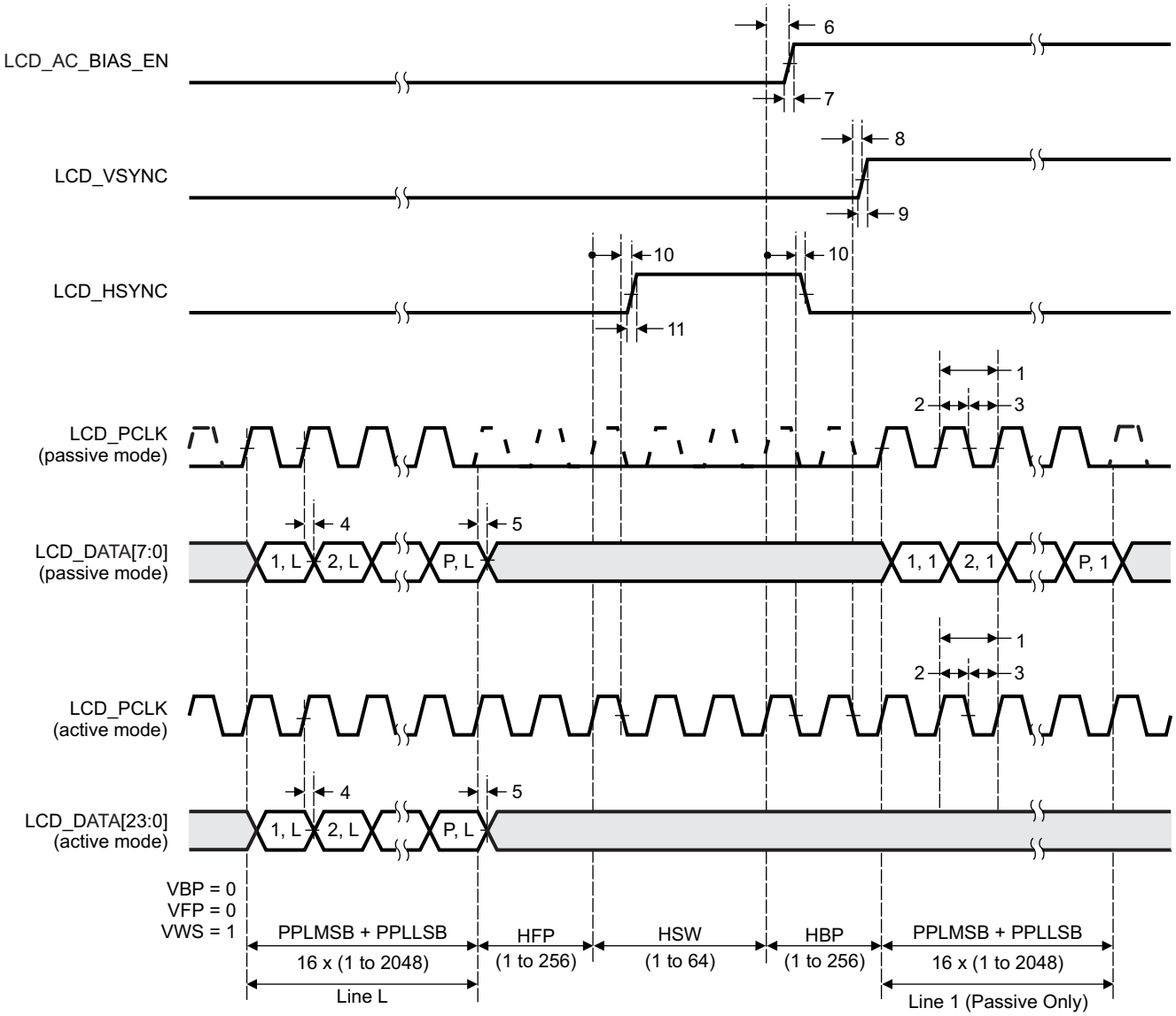

A. The dashed portion of LCD_PCLK is only shown as a reference of the internal clock that sequences the other signals.

Figure 5-84. LCD Raster-Mode Control Signal Activation

Copyright © 2011–2013, Texas Instruments Incorporated

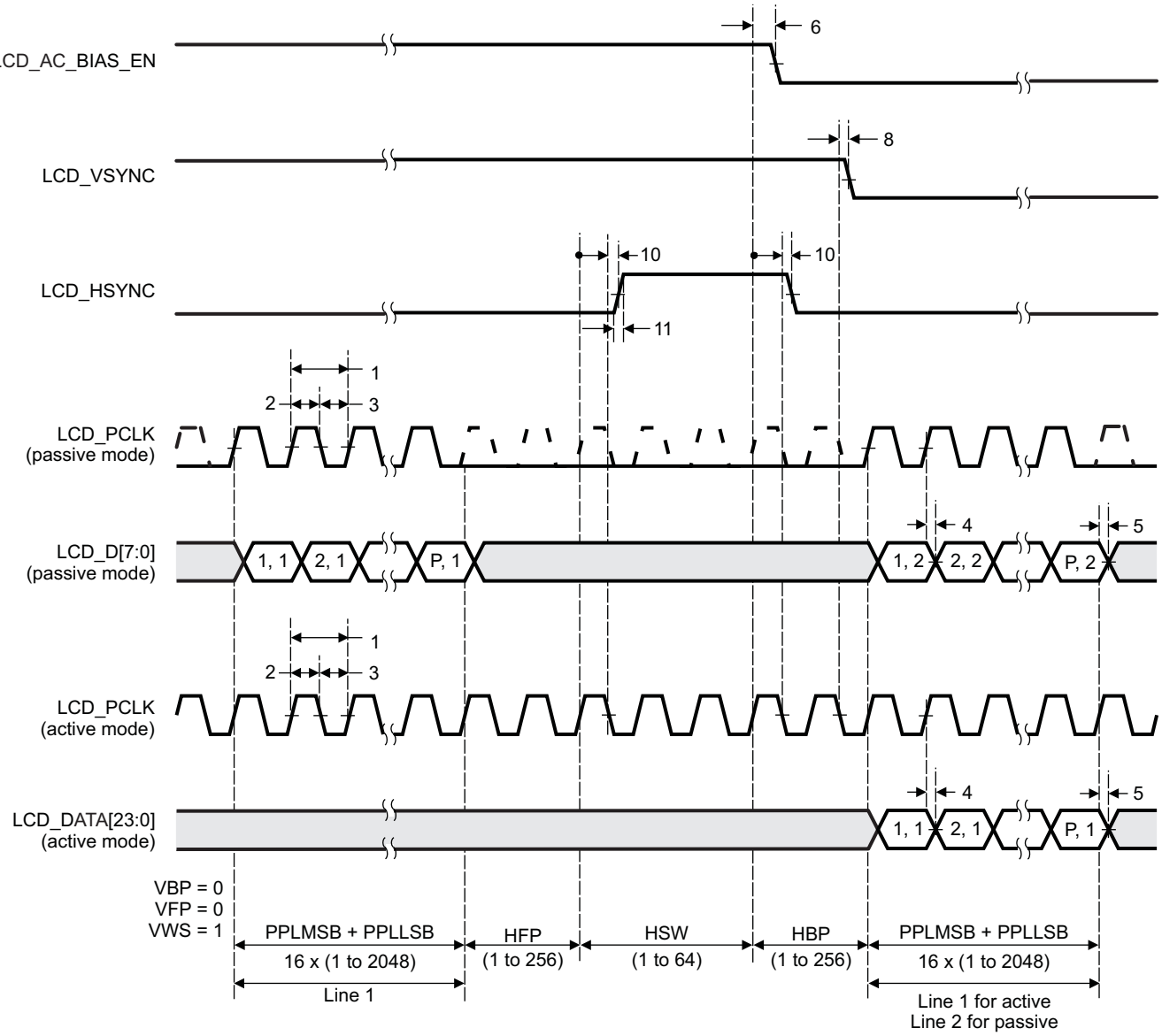

A. The dashed portion of LCD_PCLK is only shown as a reference of the internal clock that sequences the other signals.

Figure 5-85. LCD Raster-Mode Control Signal Deactivation

5.10 Multichannel Audio Serial Port (McASP)

The multichannel audio serial port (McASP) functions as a general-purpose audio serial port optimized for the needs of multichannel audio applications. The McASP is useful for time-division multiplexed (TDM) stream, Inter-Integrated Sound (I2S) protocols, and inter-component digital audio interface transmission (DIT).

5.10.1 McASP Device-Specific Information

The device includes two multichannel audio serial port (McASP) interface peripherals (McASP0 and McASP1). The McASP module consists of a transmit and receive section. These sections can operate completely independently with different data formats, separate master clocks, bit clocks, and frame syncs or, alternatively, the transmit and receive sections may be synchronized. The McASP module also includes shift registers that may be configured to operate as either transmit data or receive data.

The transmit section of the McASP can transmit data in either a time-division-multiplexed (TDM) synchronous serial format or in a digital audio interface (DIT) format where the bit stream is encoded for SPDIF, AES-3, IEC-60958, CP-430 transmission. The receive section of the McASP peripheral supports the TDM synchronous serial format.

The McASP module can support one transmit data format (either a TDM format or DIT format) and one receive format at a time. All transmit shift registers use the same format and all receive shift registers use the same format; however, the transmit and receive formats need not be the same. Both the transmit and receive sections of the McASP also support burst mode, which is useful for non-audio data (for example, passing control information between two devices).

The McASP peripheral has additional capability for flexible clock generation and error detection/handling, as well as error management.

The device McASP0 and McASP1 modules have up to four serial data pins each. The McASP FIFO size is 256 bytes and two DMA and two interrupt requests are supported. Buffers are used transparently to better manage DMA, which can be leveraged to manage data flow more efficiently.

For more detailed information on and the functionality of the McASP peripheral, see the Multichannel Audio Serial Port (McASP) section of the *AM335x ARM Cortex-A8 Microprocessors (MPUs) Technical Reference Manual* (literature number SPRUH73).

Copyright © 2011–2013, Texas Instruments Incorporated

5.10.2 McASP Electrical Data and Timing

Table 5-77. McASP Timing Conditions

TIMING CONDITION PARAMETER		MIN	TYP	MAX	UNIT
Input Conditions					
t_R	Input signal rise time	1[(1)]		4[(1)]	ns
t_F	Input signal fall time	1[(1)]		4[(1)]	ns
Output Condition					
C_{LOAD}	Output load capacitance	15		30	pF

(1) Except when specified otherwise.

Table 5-78. Timing Requirements for McASP[(1)]

(see Figure 5-86)

NO.				OPP100		OPP50		UNIT
				MIN	MAX	MIN	MAX	
1	$t_{c(AHCLKRX)}$	Cycle time, McASP[x]_AHCLKR and McASP[x]_AHCLKX		20		40		ns
2	$t_{w(AHCLKRX)}$	Pulse duration, McASP[x]_AHCLKR and McASP[x]_AHCLKX high or low		0.5P - 2.5[(2)]		0.5P - 2.5[(2)]		ns
3	$t_{c(ACLKRX)}$	Cycle time, McASP[x]_ACLKR and McASP[x]_ACLKX		20		40		ns
4	$t_{w(ACLKRX)}$	Pulse duration, McASP[x]_ACLKR and McASP[x]_ACLKX high or low		0.5R - 2.5[(3)]		0.5R - 2.5[(3)]		ns
5	$t_{su(AFSRX-ACLKRX)}$	Setup time, McASP[x]_AFSR and McASP[x]_AFSX input valid before McASP[x]_ACLKR and McASP[x]_ACLKX	ACLKR and ACLKX int	11.5		15.5		ns
			ACLKR and ACLKX ext in	4		6		
			ACLKR and ACLKX ext out	4		6		
6	$t_{h(ACLKRX-AFSRX)}$	Hold time, McASP[x]_AFSR and McASP[x]_AFSX input valid after McASP[x]_ACLKR and McASP[x]_ACLKX	ACLKR and ACLKX int	-1		-1		ns
			ACLKR and ACLKX ext in	0.4		0.4		
			ACLKR and ACLKX ext out	0.4		0.4		
7	$t_{su(AXR-ACLKRX)}$	Setup time, McASP[x]_AXR input valid before McASP[x]_ACLKR and McASP[x]_ACLKX	ACLKR and ACLKX int	11.5		15.5		ns
			ACLKR and ACLKX ext in	4		6		
			ACLKR and ACLKX ext out	4		6		
8	$t_{h(ACLKRX-AXR)}$	Hold time, McASP[x]_AXR input valid after McASP[x]_ACLKR and McASP[x]_ACLKX	ACLKR and ACLKX int	-1		-1		ns
			ACLKR and ACLKX ext in	0.4		0.4		
			ACLKR and ACLKX ext out	0.4		0.4		

(1) ACLKR internal: ACLKRCTL.CLKRM = 1, PDIR.ACLKR = 1
ACLKR external input: ACLKRCTL.CLKRM = 0, PDIR.ACLKR = 0
ACLKR external output: ACLKRCTL.CLKRM = 0, PDIR.ACLKR=1
ACLKX internal: ACLKXCTL.CLKXM = 1, PDIR.ACLKX = 1
ACLKX external input: ACLKXCTL.CLKXM = 0, PDIR.ACLKX = 0
ACLKX external output: ACLKXCTL.CLKXM = 0, PDIR.ACLKX = 1

(2) P = McASP[x]_AHCLKR and McASP[x]_AHCLKX period in nano seconds (ns).

(3) R = McASP[x]_ACLKR and McASP[x]_ACLKX period in ns.

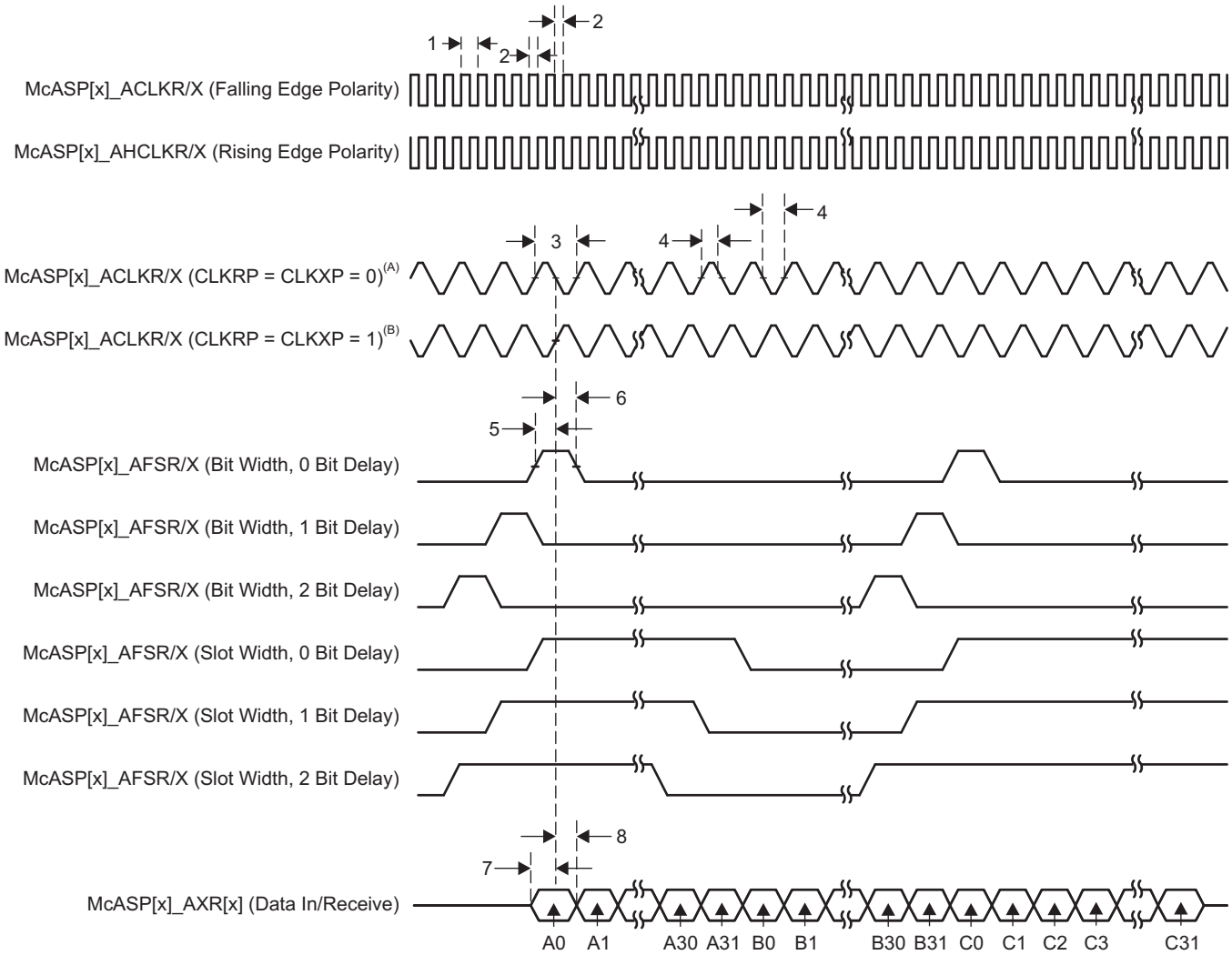

A. For CLKRP = CLKXP = 0, the McASP transmitter is configured for rising edge (to shift data out) and the McASP receiver is configured for falling edge (to shift data in).

B. For CLKRP = CLKXP = 1, the McASP transmitter is configured for falling edge (to shift data out) and the McASP receiver is configured for rising edge (to shift data in).

Figure 5-86. McASP Input Timing

Copyright © 2011–2013, Texas Instruments Incorporated

Table 5-79. Switching Characteristics for McASP[(1)]

(see Figure 5-87)

NO.				OPP100		OPP50		UNIT
				MIN	MAX	MIN	MAX	
9	$t_{c(AHCLKRX)}$	Cycle time, McASP[x]_AHCLKR and McASP[x]_AHCLKX		20[(2)]		40		ns
10	$t_{w(AHCLKRX)}$	Pulse duration, McASP[x]_AHCLKR and McASP[x]_AHCLKX high or low		0.5P - 2.5[(3)]		0.5P - 2.5[(3)]		ns
11	$t_{c(ACLKRX)}$	Cycle time, McASP[x]_ACLKR and McASP[x]_ACLKX		20		40		ns
12	$t_{w(ACLKRX)}$	Pulse duration, McASP[x]_ACLKR and McASP[x]_ACLKX high or low		0.5P - 2.5[(3)]		0.5P - 2.5[(3)]		ns
13	$t_{d(ACLKRX-AFSRX)}$	Delay time, McASP[x]_ACLKR and McASP[x]_ACLKX transmit edge to McASP[x]_AFSR and McASP[x]_AFSX output valid	ACLKR and ACLKX int	0	6	0	6	ns
			ACLKR and ACLKX ext in	2	13.5	2	18	
		Delay time, McASP[x]_ACLKR and McASP[x]_ACLKX transmit edge to McASP[x]_AFSR and McASP[x]_AFSX output valid with Pad Loopback	ACLKR and ACLKX ext out	2	13.5	2	18	
14	$t_{d(ACLKX-AXR)}$	Delay time, McASP[x]_ACLKX transmit edge to McASP[x]_AXR output valid	ACLKX int	0	6	0	6	ns
			ACLKX ext in	2	13.5	2	18	
		Delay time, McASP[x]_ACLKX transmit edge to McASP[x]_AXR output valid with Pad Loopback	ACLKX ext out	2	13.5	2	18	
15	$t_{dis(ACLKX-AXR)}$	Disable time, McASP[x]_ACLKX transmit edge to McASP[x]_AXR output high impedance	ACLKX int	0	6	0	6	ns
			ACLKX ext in	2	13.5	2	18	
		Disable time, McASP[x]_ACLKX transmit edge to McASP[x]_AXR output high impedance with Pad Loopback	ACLKX ext out	2	13.5	2	18	

(1) ACLKR internal: ACLKRCTL.CLKRM = 1, PDIR.ACLKR = 1
ACLKR external input: ACLKRCTL.CLKRM = 0, PDIR.ACLKR = 0
ACLKR external output: ACLKRCTL.CLKRM = 0, PDIR.ACLKR = 1
ACLKX internal: ACLKXCTL.CLKXM = 1, PDIR.ACLKX = 1
ACLKX external input: ACLKXCTL.CLKXM = 0, PDIR.ACLKX = 0
ACLKX external output: ACLKXCTL.CLKXM = 0, PDIR.ACLKX = 1

(2) 50 MHz

(3) P = AHCLKR and AHCLKX period.

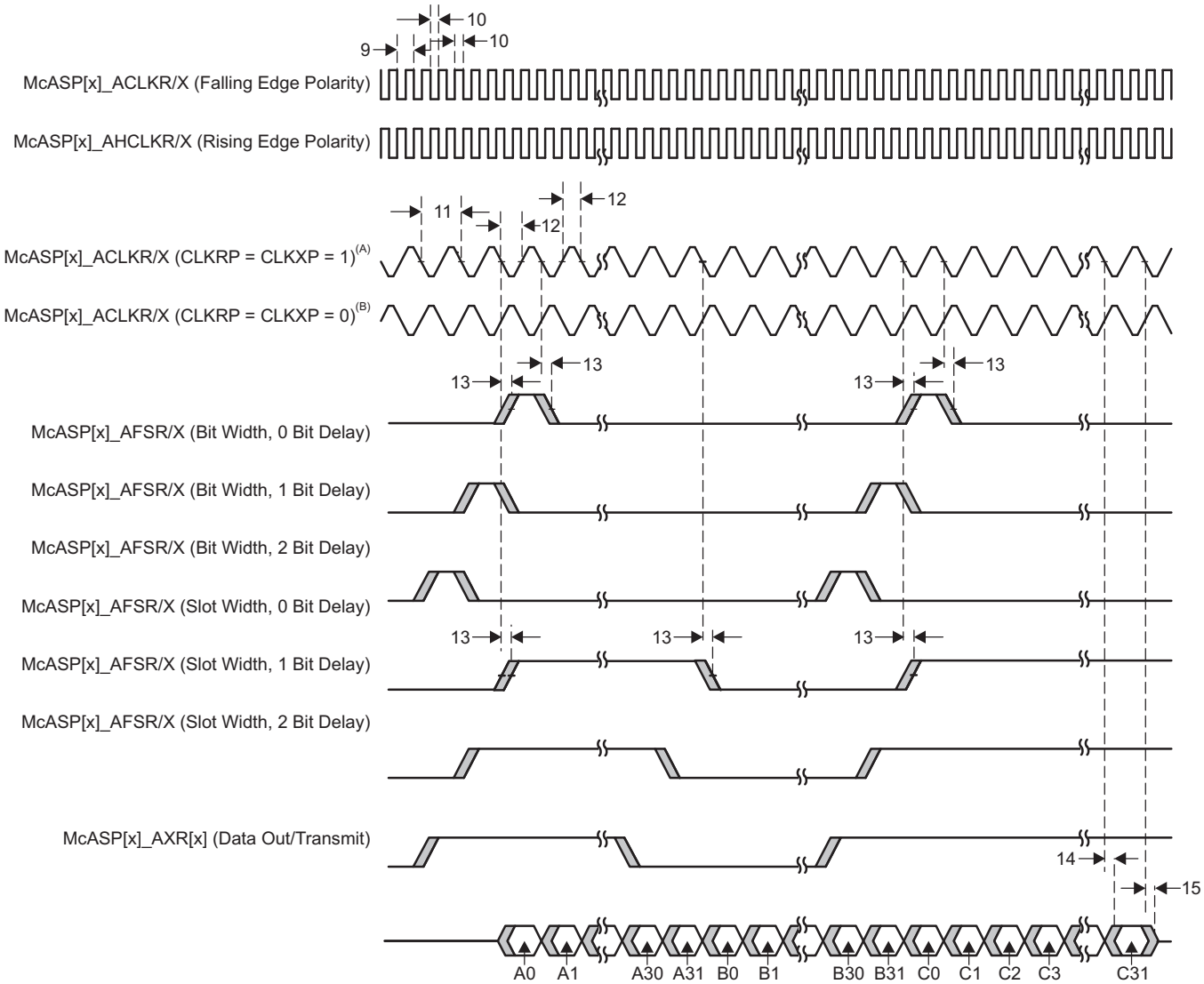

A. For CLKRP = CLKXP = 1, the McASP transmitter is configured for falling edge (to shift data out) and the McASP receiver is configured for rising edge (to shift data in).

B. For CLKRP = CLKXP = 0, the McASP transmitter is configured for rising edge (to shift data out) and the McASP receiver is configured for falling edge (to shift data in).

Figure 5-87. McASP Output Timing

Copyright © 2011–2013, Texas Instruments Incorporated

5.11 Multichannel Serial Port Interface (McSPI)

For more information, see the Multichannel Serial Port Interface (McSPI) section of the *AM335x ARM Cortex-A8 Microprocessors (MPUs) Technical Reference Manual* (literature number SPRUH73).

5.11.1 McSPI Electrical Data and Timing

The following timings are applicable to the different configurations of McSPI in master or slave mode for any McSPI and any channel (n).

5.11.1.1 McSPI—Slave Mode

Table 5-80. McSPI Timing Conditions—Slave Mode

TIMING CONDITION PARAMETER		MIN	MAX	UNIT
Input Conditions				
t_r	Input signal rise time		5	ns
t_f	Input signal fall time		5	ns
Output Condition				
C_{load}	Output load capacitance		20	pF

Table 5-81. Timing Requirements for McSPI Input Timings—Slave Mode

(see Figure 5-88)

NO.			OPP100		OPP50		UNIT
			MIN	MAX	MIN	MAX	
1	$t_{c(SPICLK)}$	Cycle time, SPI_CLK	62.5		124.8		ns
2	$t_{w(SPICLKL)}$	Typical Pulse duration, SPI_CLK low	0.5P(1)	0.5P(1)	0.5P(1)	0.5P(1)	ns
3	$t_{w(SPICLKH)}$	Typical Pulse duration, SPI_CLK high	0.5P(1)	0.5P(1)	0.5P(1)	0.5P(1)	ns
4	$t_{su(SIMO-SPICLK)}$	Setup time, SPI_D[x] (SIMO) valid before SPI_CLK active edge(2)(3)	12.92		12.92		ns
5	$t_{h(SPICLK-SIMO)}$	Hold time, SPI_D[x] (SIMO) valid after SPI_CLK active edge(2)(3)	12.92		12.92		ns
8	$t_{su(CS-SPICLK)}$	Setup time, SPI_CS valid before SPI_CLK first edge(2)	12.92		12.92		ns
9	$t_{h(SPICLK-CS)}$	Hold time, SPI_CS valid after SPI_CLK last edge(2)	12.92		12.92		ns

(1) P = SPI_CLK period.

(2) This timing applies to all configurations regardless of MCSPIX_CLK polarity and which clock edges are used to drive output data and capture input data.

(3) Pins SPIx_D0 and SPIx_D1 can function as SIMO or SOMI.

Table 5-82. Switching Characteristics for McSPI Output Timings—Slave Mode

(see Figure 5-89)

NO.	PARAMETER		OPP100		OPP50		UNIT
			MIN	MAX	MIN	MAX	
6	$t_{d(SPICLK-SOMI)}$	Delay time, SPI_CLK active edge to SPI_D[x] (SOMI) transition(1)(2)	-4.00	17.12	-4.00	17.12	ns
7	$t_{d(CS-SOMI)}$	Delay time, SPI_CS active edge to SPI_D[x] (SOMI) transition(1)(2)		17.12		17.12	ns

(1) This timing applies to all configurations regardless of MCSPIX_CLK polarity and which clock edges are used to drive output data and capture input data.

(2) Pins SPIx_D0 and SPIx_D1 can function as SIMO or SOMI.

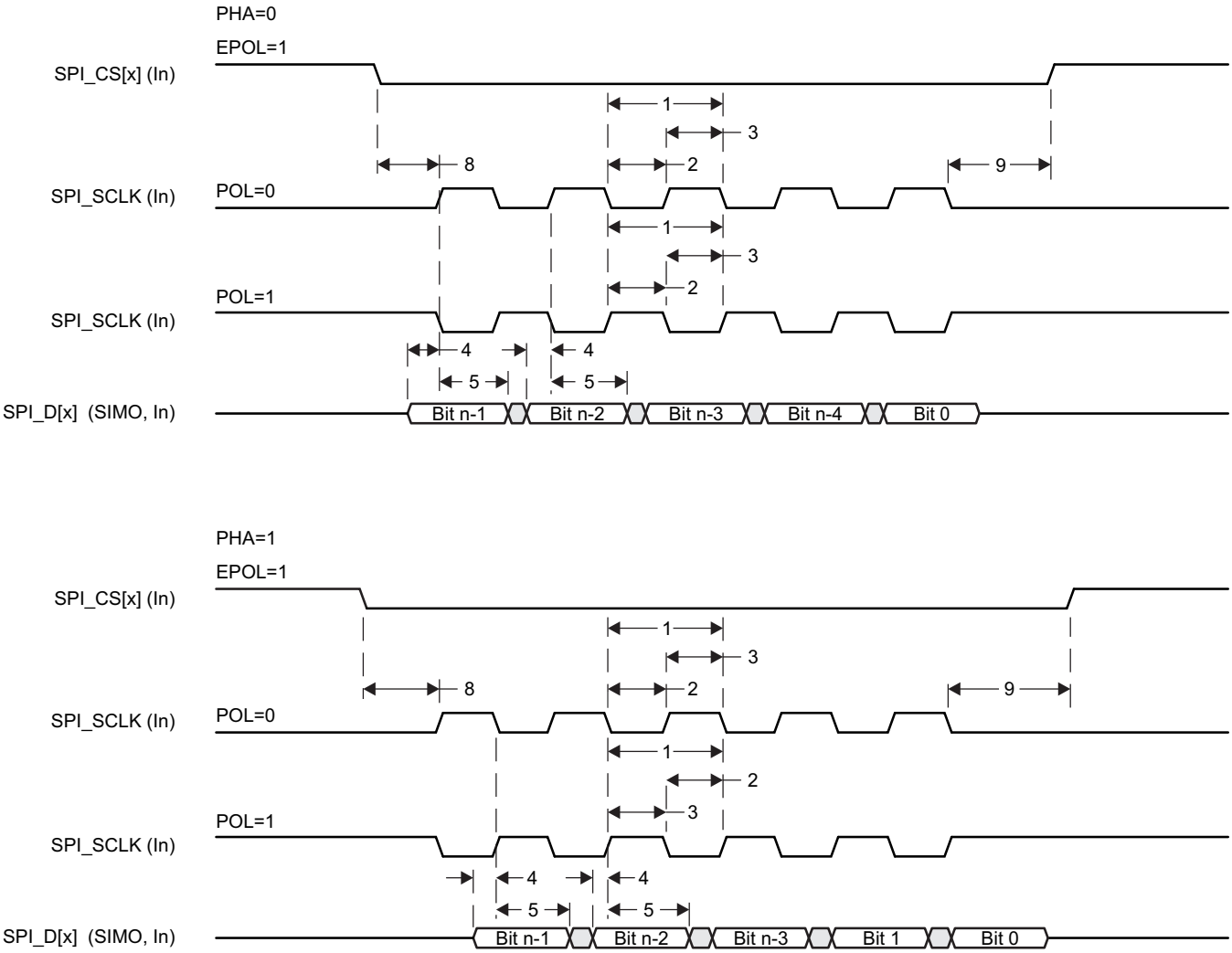

Figure 5-88. SPI Slave Mode Receive Timing

Copyright © 2011–2013, Texas Instruments Incorporated

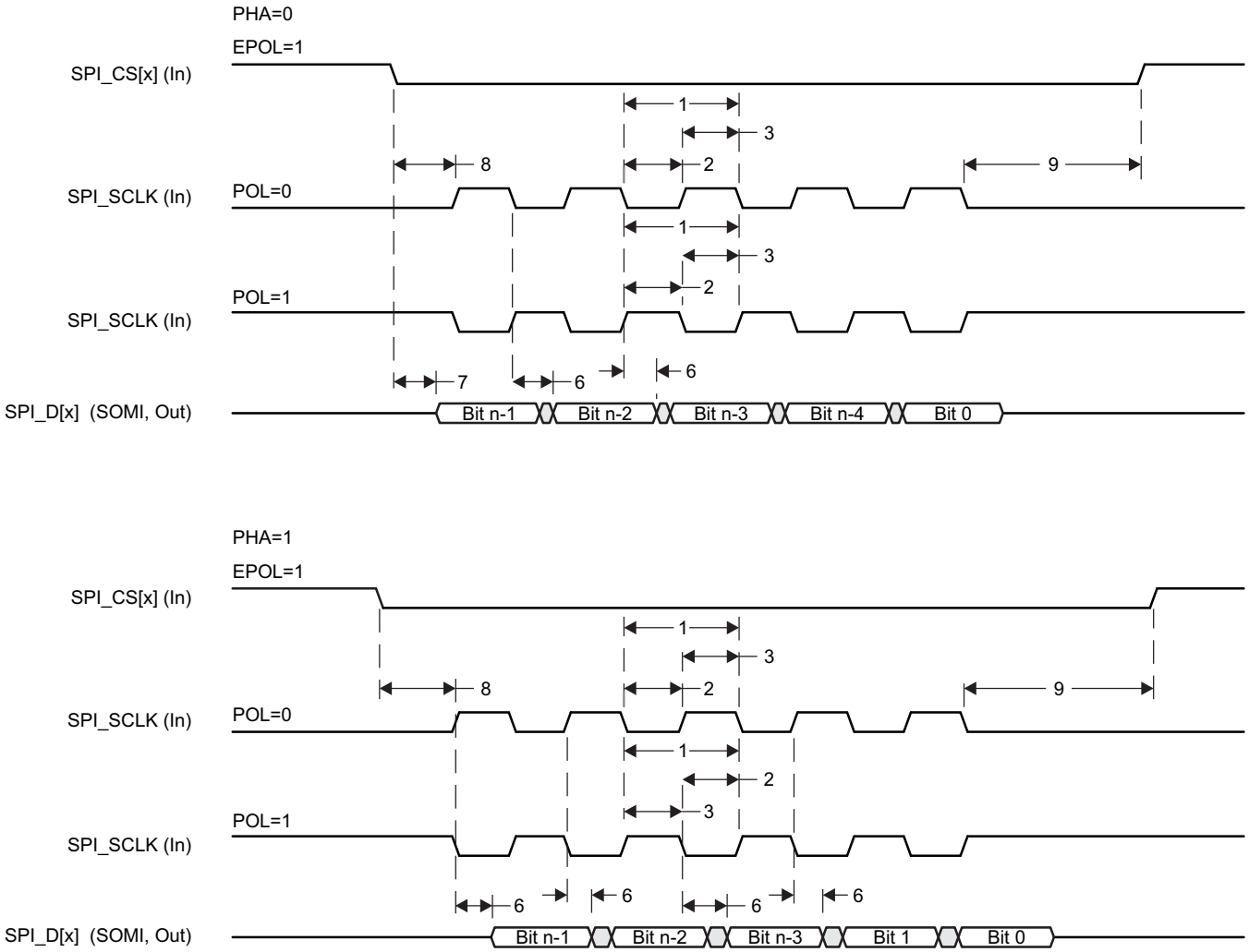

Figure 5-89. SPI Slave Mode Transmit Timing

5.11.1.2 McSPI—Master Mode

Table 5-83. McSPI Timing Conditions—Master Mode

TIMING CONDITION PARAMETER		LOW LOAD		HIGH LOAD		UNIT
		MIN	MAX	MIN	MAX	
Input Conditions						
t_r	Input signal rise time		8		8	ns
t_f	Input signal fall time		8		8	ns
Output Condition						
C_{load}	Output load capacitance		5		25	pF

Table 5-84. Timing Requirements for McSPI Input Timings—Master Mode

(see Figure 5-90)

NO.			OPP100				OPP50				UNIT
			LOW LOAD		HIGH LOAD		LOW LOAD		HIGH LOAD		
			MIN	MAX	MIN	MAX	MIN	MAX	MIN	MAX	
4	$t_{su(SOMI-SPICLKH)}$	Setup time, SPI_D[x] (SOMI) valid before SPI_CLK active edge[(1)]	2.29		3.02		2.29		3.02		ns
5	$t_{h(SPICLKH-SOMI)}$	Hold time, SPI_D[x] (SOMI) valid after SPI_CLK active edge[(1)]	4.7		4.7		4.7		4.7		ns

(1) Pins SPIx_D0 and SPIx_D1 can function as SIMO or SOMI.

Table 5-85. Switching Characteristics for McSPI Output Timings—Master Mode

(see Figure 5-91)

NO.	PARAMETER			OPP100				OPP50				UNIT
				LOW LOAD		HIGH LOAD		LOW LOAD		HIGH LOAD		
				MIN	MAX	MIN	MAX	MIN	MAX	MIN	MAX	
1	$t_{c(SPICLK)}$	Cycle time, SPI_CLK		20.8		20.8		41.6		41.6		ns
2	$t_{w(SPICLKL)}$	Typical Pulse duration, SPI_CLK low		0.5P[(1)]	0.5P[(1)]	0.5P[(1)]	0.5P[(1)]	0.5P[(1)]	0.5P[(1)]	0.5P[(1)]	0.5P[(1)]	ns
3	$t_{w(SPICLKH)}$	Typical Pulse duration, SPI_CLK high		0.5P[(1)]	0.5P[(1)]	0.5P[(1)]	0.5P[(1)]	0.5P[(1)]	0.5P[(1)]	0.5P[(1)]	0.5P[(1)]	ns
	$t_{r(SPICLK)}$	Rising time, SPI_CLK			3.82		3.82		3.82		3.82	ns
	$t_{f(SPICLK)}$	Falling time, SPI_CLK			3.44		3.44		3.44		3.44	ns
6	$t_{d(SPICLK-SIMO)}$	Delay time, SPI_CLK active edge to SPI_D[x] (SIMO) transition[(2)]		-3.57	3.57	-4.62	4.62	-3.57	3.57	-4.62	4.62	ns
7	$t_{d(CS-SIMO)}$	Delay time, SPI_CS active edge to SPI_D[x] (SIMO) transition[(2)]			3.57		4.62		3.57		4.62	ns
8	$t_{d(CS-SPICLK)}$	Delay time, SPI_CS active to SPI_CLK first edge	Mode 1 and 3[(3)]	A - 4.2[(4)]		A - 2.54[(4)]		A - 4.2[(4)]		A - 2.54[(4)]		ns
			Mode 0 and 2[(3)]	B - 4.2[(5)]		B - 2.54[(5)]		B - 4.2[(5)]		B - 2.54[(5)]		ns
9	$t_{d(SPICLK-CS)}$	Delay time, SPI_CLK last edge to SPI_CS inactive	Mode 1 and 3[(3)]	B - 4.2[(5)]		B - 2.54[(5)]		B - 4.2[(5)]		B - 2.54[(5)]		ns
			Mode 0 and 2[(3)]	A - 4.2[(4)]		A - 2.54[(4)]		A - 4.2[(4)]		A - 2.54[(4)]		ns

(1) P = SPI_CLK period.

(2) Pins SPIx_D0 and SPIx_D1 can function as SIMO or SOMI.

(3) The polarity of SPIx_CLK and the active edge (rising or falling) on which mcspix_simo is driven and mcspix_somi is latched is all software configurable:

- SPIx_CLK(1) phase programmable with the bit PHA of MCSPI_CH(i)CONF register: PHA = 1 (Modes 1 and 3).
- SPIx_CLK(1) phase programmable with the bit PHA of MCSPI_CH(i)CONF register: PHA = 0 (Modes 0 and 2).

(4) Case P = 20.8 ns, A = (TCS+1)*TSPICLKREF (TCS is a bit field of MCSPI_CH(i)CONF register).

Copyright © 2011–2013, Texas Instruments Incorporated

Case P > 20.8 ns, A = (TCS+0.5)*Fratio*TSPICLKREF (TCS is a bit field of MCSPI_CH(i)CONF register).
Note: P = SPI_CLK clock period.

(5) B = (TCS+0.5)*TSPICLKREF*Fratio (TCS is a bit field of MCSPI_CH(i)CONF register, Fratio: Even≥2).

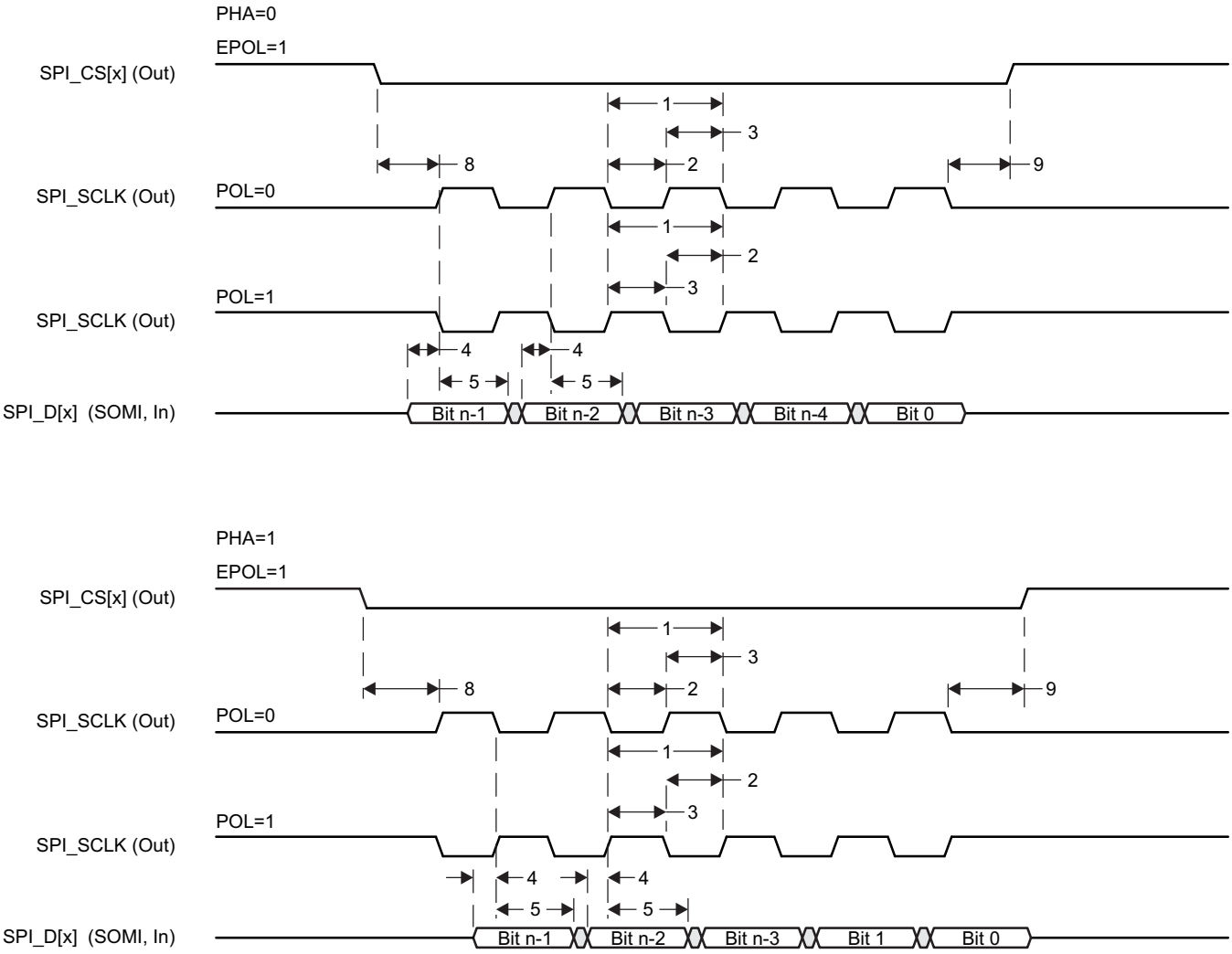

Figure 5-90. SPI Master Mode Receive Timing

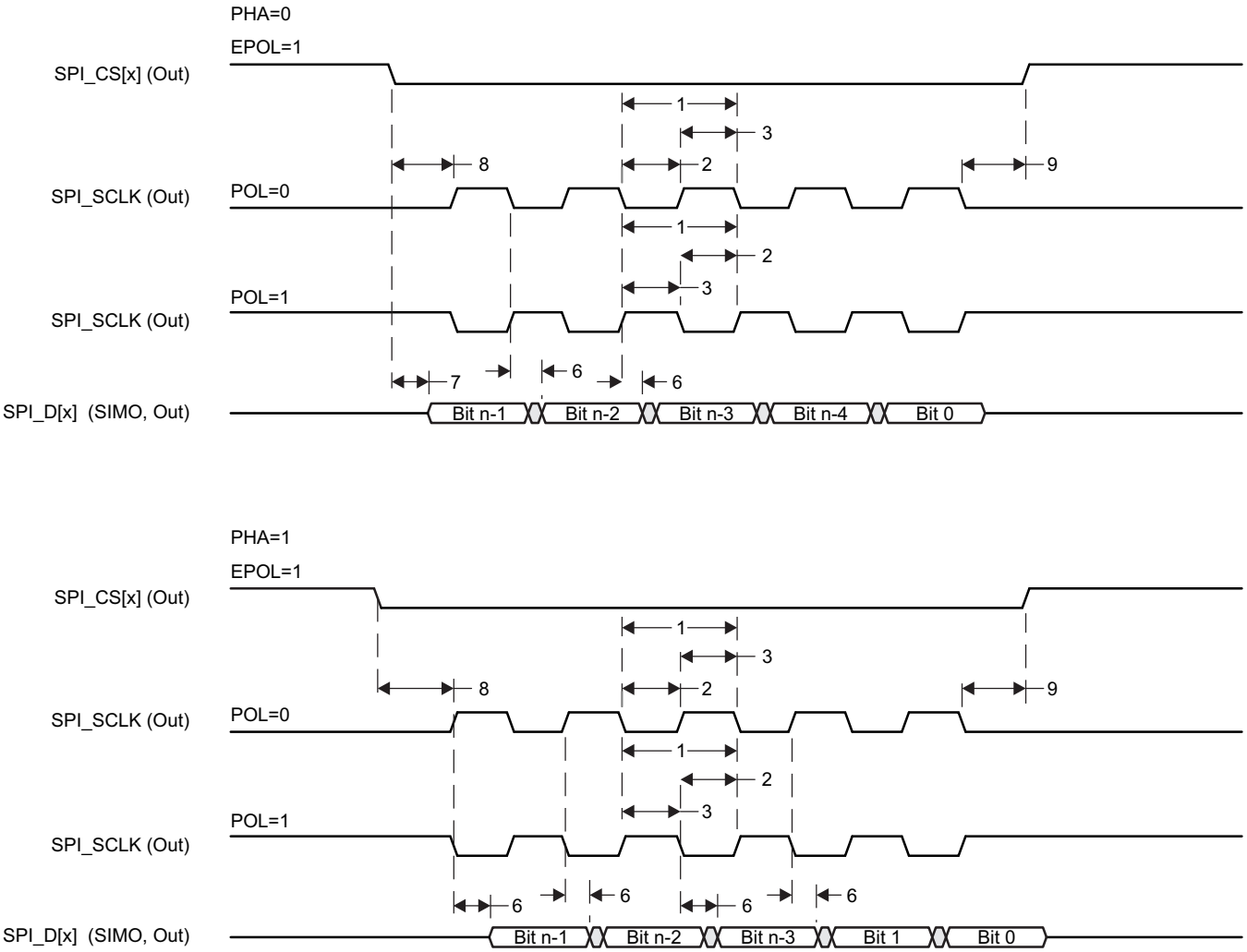

Figure 5-91. SPI Master Mode Transmit Timing

Copyright © 2011–2013, Texas Instruments Incorporated

5.12 Multimedia Card (MMC) Interface

For more information, see the Multimedia Card (MMC) section of the *AM335x ARM Cortex-A8 Microprocessors (MPUs) Technical Reference Manual* (literature number SPRUH73).

5.12.1 MMC Electrical Data and Timing

Table 5-86. MMC Timing Conditions

TIMING CONDITION PARAMETER		MIN	TYP	MAX	UNIT
Input Conditions					
t_r	Input signal rise time	1		5	ns
t_f	Input signal fall time	1		5	ns
Output Condition					
C_{load}	Output load capacitance	3		30	pF

Table 5-87. Timing Requirements for MMC[x]_CMD and MMC[x]_DAT[7:0]

(see Figure 5-92)

NO.			MIN	TYP	MAX	UNIT
1	$t_{su(CMDV-CLKH)}$	Setup time, MMC_CMD valid before MMC_CLK rising clock edge	4.1			ns
2	$t_{h(CLKH-CMDV)}$	Hold time, MMC_CMD valid after MMC_CLK rising clock edge	3.76			ns
3	$t_{su(DATV-CLKH)}$	Setup time, MMC_DATx valid before MMC_CLK rising clock edge	4.1			ns
4	$t_{h(CLKH-DATV)}$	Hold time, MMC_DATx valid after MMC_CLK rising clock edge	3.76			ns

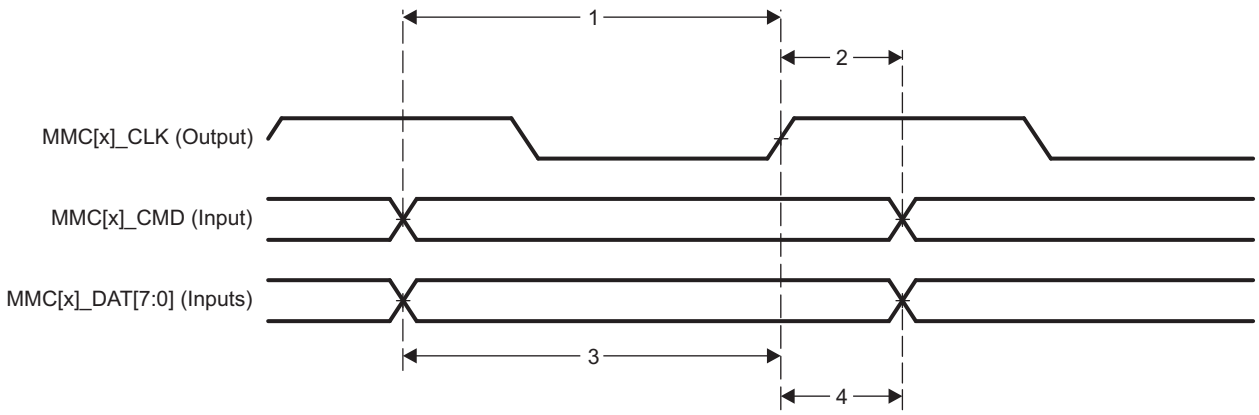

Figure 5-92. MMC[x]_CMD and MMC[x]_DAT[7:0] Input Timing

Table 5-88. Switching Characteristics for MMC[x]_CLK

(see Figure 5-93)

NO.	PARAMETER		STANDARD MODE			HIGH-SPEED MODE			UNIT
			MIN	TYP	MAX	MIN	TYP	MAX	
5	$f_{op(CLK)}$	Operating frequency, MMC_CLK			24			48	MHz
	$t_{cop(CLK)}$	Operating period: MMC_CLK	41.7			20.8			ns
	$f_{id(CLK)}$	Identification mode frequency, MMC_CLK			400			400	kHz
	$t_{cid(CLK)}$	Identification mode period: MMC_CLK	2500			2500			ns
6	$t_{w(CLKL)}$	Pulse duration, MMC_CLK low	(0.5*P) - $t_{f(CLK)}$ (1)			(0.5*P) - $t_{f(CLK)}$ (1)			ns
7	$t_{w(CLKH)}$	Pulse duration, MMC_CLK high	(0.5*P) - $t_{r(CLK)}$ (1)			(0.5*P) - $t_{r(CLK)}$ (1)			ns
8	$t_{r(CLK)}$	Rise time, All Signals (10% to 90%)			2.2			2.2	ns
9	$t_{f(CLK)}$	Fall time, All Signals (10% to 90%)			2.2			2.2	ns

(1) P = MMC_CLK period.

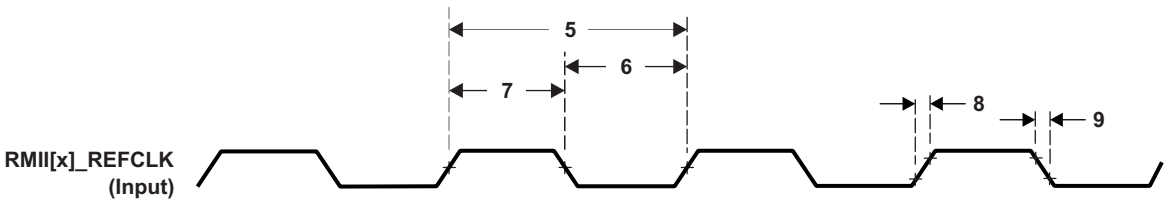

Figure 5-93. MMC[x]_CLK Timing

Table 5-89. Switching Characteristics for MMC[x]_CMD and MMC[x]_DAT[7:0]—Standard Mode

(see Figure 5-94)

NO.	PARAMETER		OPP100			OPP50			UNIT
			MIN	TYP	MAX	MIN	TYP	MAX	
10	$t_{d(CLKL-CMD)}$	Delay time, MMC_CLK falling clock edge to MMC_CMD transition	-4		14	-4		17.5	ns
11	$t_{d(CLKL-DAT)}$	Delay time, MMC_CLK falling clock edge to MMC_DATx transition	-4		14	-4		17.5	ns

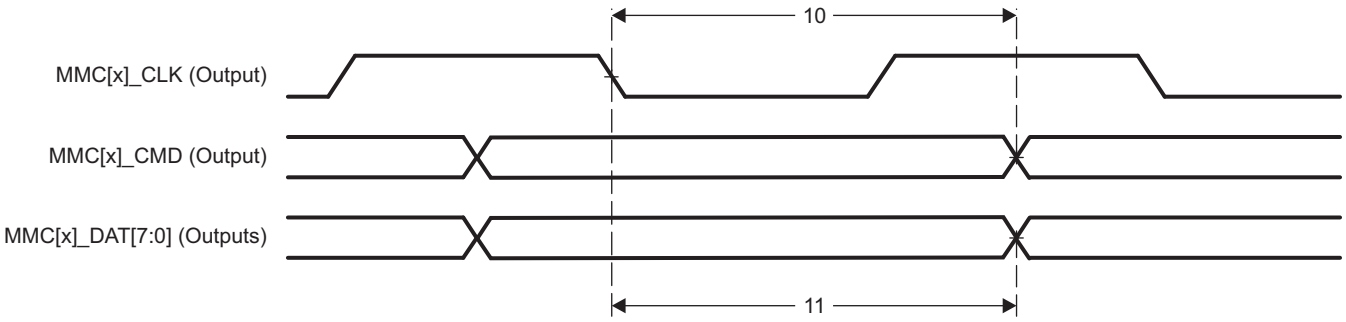

Figure 5-94. MMC[x]_CMD and MMC[x]_DAT[7:0] Output Timing—Standard Mode

Copyright © 2011–2013, Texas Instruments Incorporated

Table 5-90. Switching Characteristics for MMC[x]_CMD and MMC[x]_DAT[7:0]—High-Speed Mode

(see Figure 5-95)

NO.	PARAMETER		OPP100			OPP50			UNIT
			MIN	TYP	MAX	MIN	TYP	MAX	
12	$t_{d(CLKL-CMD)}$	Delay time, MMC_CLK rising clock edge to MMC_CMD transition	2.5		14	2.5		17.5	ns
13	$t_{d(CLKL-DAT)}$	Delay time, MMC_CLK rising clock edge to MMC_DATx transition	2.5		14	2.5		17.5	ns

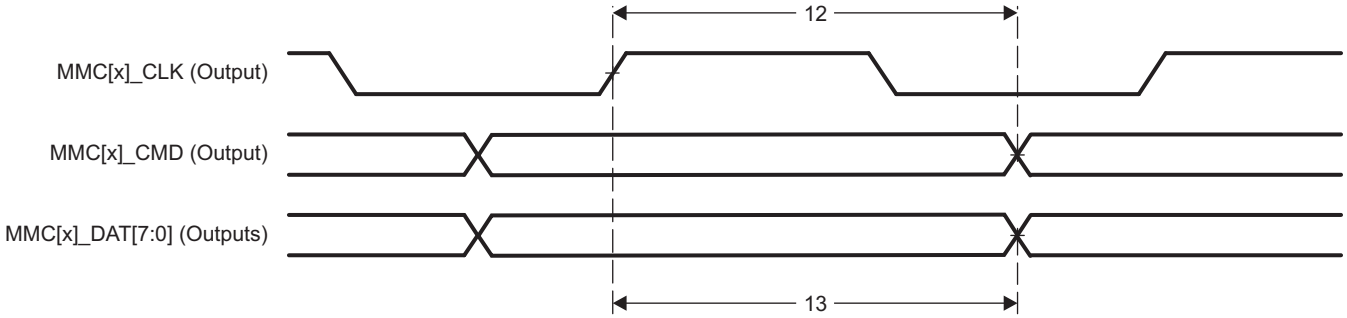

Figure 5-95. MMC[x]_CMD and MMC[x]_DAT[7:0] Output Timing—High Speed Mode

5.13 Universal Asynchronous Receiver Transmitter (UART)

For more information, see the Universal Asynchronous Receiver Transmitter (UART) section of the *AM335x ARM Cortex-A8 Microprocessors (MPUs) Technical Reference Manual* (literature number SPRUH73).

5.13.1 UART Electrical Data and Timing

Table 5-91. Timing Requirements for UARTx Receive

(see Figure 5-96)

NO.			MIN	MAX	UNIT
3	$t_{w(RX)}$	Pulse width, receive start, stop, data bit	0.96U(1)	1.05U(1)	ns

(1) U = UART baud time = 1/programmed baud rate.

Table 5-92. Switching Characteristics for UARTx Transmit

(see Figure 5-96)

NO.	PARAMETER		MIN	MAX	UNIT
1	$f_{baud(baud)}$	Maximum programmable baud rate		3.6864	MHz
2	$t_{w(TX)}$	Pulse width, transmit start, stop, data bit	U - 2(1)	U + 2(1)	ns

(1) U = UART baud time = 1/programmed baud rate.

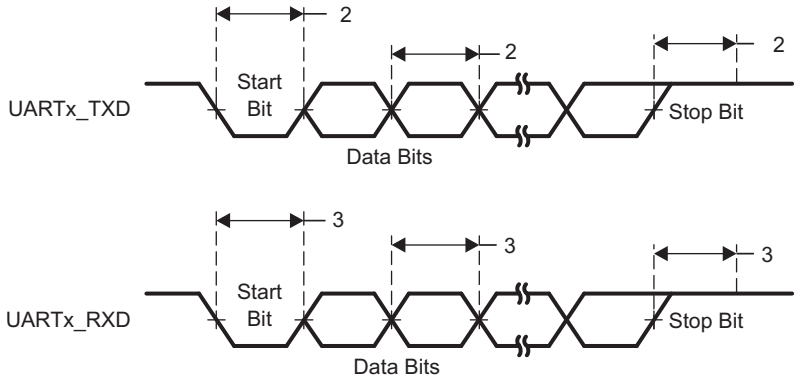

Figure 5-96. UART Timings

Copyright © 2011–2013, Texas Instruments Incorporated

5.13.2 UART IrDA Interface

The IrDA module operates in three different modes:

- Slow infrared (SIR) (≤ 115.2 Kbps)
- Medium infrared (MIR) (0.576 Mbps and 1.152 Mbps)
- Fast infrared (FIR) (4 Mbps).

Figure 5-97 illustrates the UART IrDA pulse parameters. Table 5-93 and Table 5-94 list the signaling rates and pulse durations for UART IrDA receive and transmit modes.

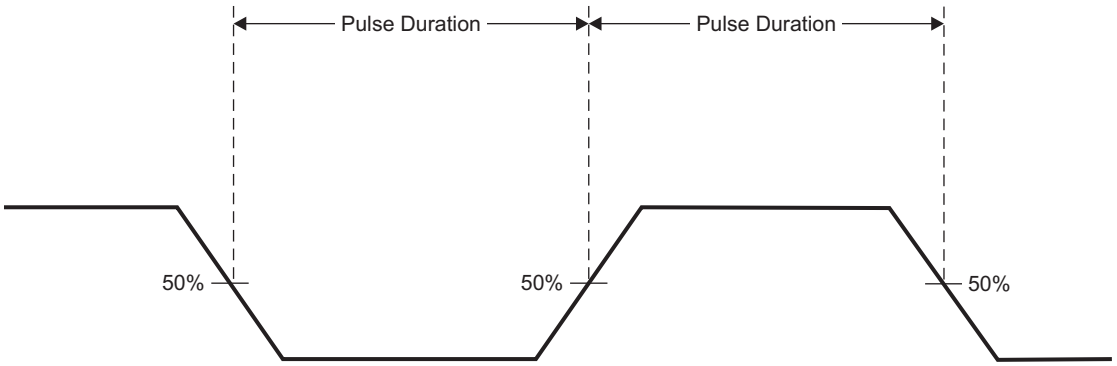

Figure 5-97. UART IrDA Pulse Parameters

Table 5-93. UART IrDA—Signaling Rate and Pulse Duration—Receive Mode

SIGNALING RATE	ELECTRICAL PULSE DURATION		UNIT
	MIN	MAX	
SIR			
2.4 Kbps	1.41	88.55	µs
9.6 Kbps	1.41	22.13	µs
19.2 Kbps	1.41	11.07	µs
38.4 Kbps	1.41	5.96	µs
57.6 Kbps	1.41	4.34	µs
115.2 Kbps	1.41	2.23	µs
MIR			
0.576 Mbps	297.2	518.8	ns
1.152 Mbps	149.6	258.4	ns
FIR			
4 Mbps (Single pulse)	67	164	ns
4 Mbps (Double pulse)	190	289	ns

Copyright © 2011–2013, Texas Instruments Incorporated

Table 5-94. UART IrDA—Signaling Rate and Pulse Duration—Transmit Mode

SIGNALING RATE	ELECTRICAL PULSE DURATION		UNIT
	MIN	MAX	
SIR			
2.4 Kbps	78.1	78.1	µs
9.6 Kbps	19.5	19.5	µs
19.2 Kbps	9.75	9.75	µs
38.4 Kbps	4.87	4.87	µs
57.6 Kbps	3.25	3.25	µs
115.2 Kbps	1.62	1.62	µs
MIR			
0.576 Mbps	414	419	ns
1.152 Mbps	206	211	ns
FIR			
4 Mbps (Single pulse)	123	128	ns
4 Mbps (Double pulse)	248	253	ns

Copyright © 2011–2013, Texas Instruments Incorporated

6 Device and Documentation Support

6.1 Device Support

6.1.1 Development Support

TI offers an extensive line of development tools, including tools to evaluate the performance of the processors, generate code, develop algorithm implementations, and fully integrate and debug software and hardware modules. The tool's support documentation is electronically available within the Code Composer Studio™ Integrated Development Environment (IDE).

The following products support development of AM335x device applications:

Software Development Tools: Code Composer Studio™ Integrated Development Environment (IDE): including Editor C/C++/Assembly Code Generation, and Debug plus additional development tools Scalable, Real-Time Foundation Software (DSP/BIOS™), which provides the basic run-time target software needed to support any AM335x device application.

Hardware Development Tools: Extended Development System (XDS™) Emulator

For a complete listing of development-support tools for the AM335x microprocessor platform, visit the Texas Instruments website at www.ti.com. For information on pricing and availability, contact the nearest TI field sales office or authorized distributor.

6.1.2 Device Nomenclature

To designate the stages in the product development cycle, TI assigns prefixes to the part numbers of all microprocessors (MPUs) and support tools. Each device has one of three prefixes: X, P, or null (no prefix) (for example, XAM3358AZCE). Texas Instruments recommends two of three possible prefix designators for its support tools: TMDX and TMDS. These prefixes represent evolutionary stages of product development from engineering prototypes (TMDX) through fully qualified production devices and tools (TMDS).

Device development evolutionary flow:

X Experimental device that is not necessarily representative of the final device's electrical specifications and may not use production assembly flow.

P Prototype device that is not necessarily the final silicon die and may not necessarily meet final electrical specifications.

null Production version of the silicon die that is fully qualified.

Support tool development evolutionary flow:

TMDX Development-support product that has not yet completed Texas Instruments internal qualification testing.

TMDS Fully-qualified development-support product.

X and P devices and TMDX development-support tools are shipped against the following disclaimer:

"Developmental product is intended for internal evaluation purposes."

Production devices and TMDS development-support tools have been characterized fully, and the quality and reliability of the device have been demonstrated fully. TI's standard warranty applies.

Predictions show that prototype devices (X or P) have a greater failure rate than the standard production devices. Texas Instruments recommends that these devices not be used in any production system because their expected end-use failure rate still is undefined. Only qualified production devices are to be used.

TI device nomenclature also includes a suffix with the device family name. This suffix indicates the package type (for example, ZCE), the temperature range (for example, blank is the default commercial temperature range), and the device speed range, in megahertz (for example, 27 is 275 MHz). Figure 6-1 provides a legend for reading the complete device name for any AM335x device.

For orderable part numbers of AM335x devices in the ZCE and ZCZ package types, see the Package Option Addendum of this document, the TI website (www.ti.com), or contact your TI sales representative.

For additional description of the device nomenclature markings on the die, see the *AM335x ARM Cortex-A8 Microprocessors (MPUs) Silicon Errata* (literature number SPRZ360).

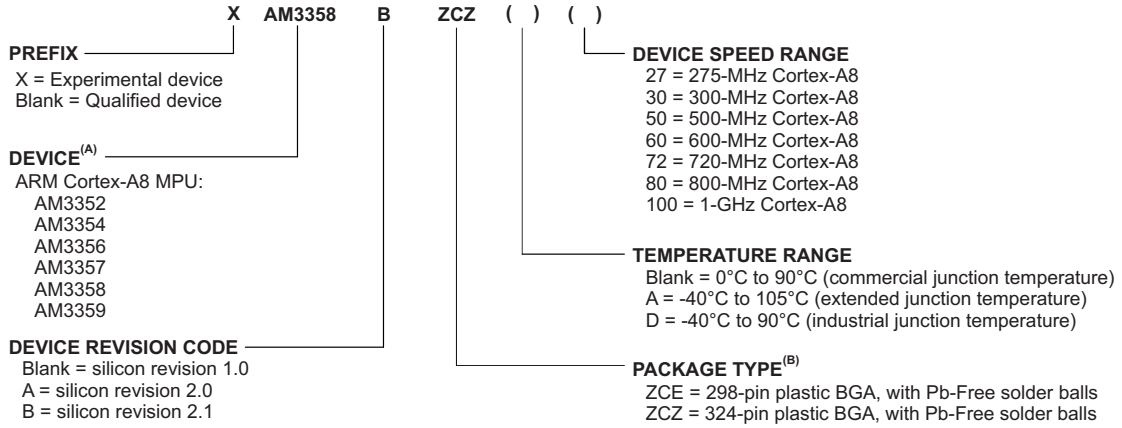

A. The AM3358 device shown in this device nomenclature example is one of several valid part numbers for the AM335x family of devices. For orderable device part numbers, see the Package Option Addendum of this document.

B. BGA = Ball Grid Array.

Figure 6-1. AM335x Device Nomenclature

6.2 Documentation Support

6.2.1 Related Documentation from Texas Instruments

The following documents describe the AM335x MPU. Copies of these documents are available on the Internet at www.ti.com. Tip: Enter the literature number in the search box.

The current documentation that describes the AM335x MPU, related peripherals, and other technical collateral, is available in the product folder at: www.ti.com.

SPRUH73 ***AM335x ARM Cortex-A8 Microprocessors (MPUs) Technical Reference Manual.*** Collection of documents providing detailed information on the AM335x device including power, reset, and clock control, interrupts, memory map, and switch fabric interconnect. Detailed information on the microprocessor unit (MPU) subsystem as well as a functional description of the peripherals supported on AM335x devices is also included.

SPRZ360 ***AM335x ARM Cortex-A8 Microprocessors (MPUs) Silicon Errata.*** Describes the known exceptions to the functional specifications for the AM335x ARM Cortex-A8 Microprocessors.

6.2.2 Community Resources

The following links connect to TI community resources. Linked contents are provided "AS IS" by the respective contributors. They do not constitute TI specifications and do not necessarily reflect TI's views; see TI's Terms of Use.

TI E2E Community ***TI's Engineer-to-Engineer (E2E) Community.*** Created to foster collaboration among engineers. At e2e.ti.com, you can ask questions, share knowledge, explore ideas and help solve problems with fellow engineers.

TI Embedded Processors Wiki ***Texas Instruments Embedded Processors Wiki.*** Established to help

 Copyright © 2011–2013, Texas Instruments Incorporated

developers get started with Embedded Processors from Texas Instruments and to foster innovation and growth of general knowledge about the hardware and software surrounding these devices.

6.2.3 Related Documentation from Other Sources

The following documents are related to the AM335x MPU. Copies of these documents can be obtained directly from the internet or from your Texas Instruments representative.

Cortex-A8 Technical Reference Manual. This is the technical reference manual for the Cortex-A8 processor. A copy of this document can be obtained via the internet at http://infocenter.arm.com. To determine the revision of the Cortex-A8 core used on your device, see the *AM335x ARM Cortex-A8 Microprocessors (MPUs) Silicon Errata* (literature number SPRZ360).

ARM Core Cortex™-A8 (AT400/AT401) Errata Notice. Provides a list of advisories for the different revisions of the Cortex-A8 processor. Contact your TI representative for a copy of this document. To determine the revision of the Cortex-A8 core used on your device, see the *AM335x ARM Cortex-A8 Microprocessors (MPUs) Silicon Errata* (literature number SPRZ360).

7 Mechanical Packaging and Orderable Information

7.1 Thermal Data for ZCE and ZCZ Packages

Failure to maintain a junction temperature within the range specified in Table 3-12 reduces operating lifetime, reliability, and performance—and may cause irreversible damage to the system. Therefore, the product design cycle should include thermal analysis to verify the maximum operating junction temperature of the device. It is important this thermal analysis is performed using specific system use cases and conditions. TI provides an application report to aid users in overcoming some of the existing challenges of producing a good thermal design. For more information, see *AM335x Thermal Considerations* (literature number SPRABT1).

Table 7-1 provides thermal characteristics for the packages used on this device.

NOTE

Table 7-1 provides simulation data and may not represent actual use-case values.

Table 7-1. Thermal Resistance Characteristics (PBGA Package) [ZCE and ZCZ]

NAME	DESCRIPTION	AIR FLOW (1)	ZCE (°C/W) (2)	ZCZ (°C/W) (2)
Θ_{JC}	Junction-to-case (1S0P) (3)	NA	10.3	10.2
Θ_{JB}	Junction-to-board (2S2P) (3)	NA	11.6	12.1
Θ_{JA}	Junction-to-free air (2S2P) (3)	0.0	24.7	24.2
		1.0	20.5	20.1
		2.0	19.7	19.3
		3.0	19.2	18.8
Ψ_{JT}	Junction-to-package top (2S2P) (3)	0.0	0.4	0.3
		1.0	0.6	0.6
		2.0	0.7	0.7
		3.0	0.9	0.8
Ψ_{JB}	Junction-to-board (2S2P) (3)	0.0	11.9	12.7
		1.0	11.7	12.3
		2.0	11.7	12.3
		3.0	11.6	12.2

(1) m/s = meters per second.
(2) °C/W = degress celsius per watt.
(3) The board types are defined by JEDEC (reference JEDEC standard JESD51-9, *Test Board for Area Array Surface Mount Package Thermal Measurements*).

7.2 Via Channel

The ZCE package has been specially engineered with Via Channel™ technology. This allows larger than normal PCB via and trace sizes and reduced PCB signal layers to be used in a PCB design with the 0.65-mm pitch package, and substantially reduces PCB costs. It allows PCB routing in only two signal layers (four layers total) due to the increased layer efficiency of the Via Channel™ BGA technology.

Via Channel™ technology implemented on the ZCE package makes it possible to build an AM335x-based product with a 4-layer PCB, but a 4-layer PCB may not meet system performance goals. Therefore, system performance using a 4-layer PCB design must be evaluated during product design.

7.3 Packaging Information

The following packaging information and addendum reflect the most current data available for the designated devices. This data is subject to change without notice and without revision of this document.

 Copyright © 2011–2013, Texas Instruments Incorporated

PACKAGING INFORMATION

Orderable Device	Status (1)	Package Type	Package Drawing	Pins	Package Qty	Eco Plan (2)	Lead/Ball Finish	MSL Peak Temp (3)	Op Temp (°C)	Device Marking (4/5)	Samples
AM3352BZCE30	ACTIVE	NFBGA	ZCE	298	160	Green (RoHS & no Sb/Br)	SNAGCU	Level-3-260C-168 HR	0 to 90	AM3352BZCE30	Samples
AM3352BZCE60	ACTIVE	NFBGA	ZCE	298	160	Green (RoHS & no Sb/Br)	SNAGCU	Level-3-260C-168 HR	0 to 90	AM3352BZCE60	Samples
AM3352BZCEA30	ACTIVE	NFBGA	ZCE	298	160	Green (RoHS & no Sb/Br)	SNAGCU	Level-3-260C-168 HR	-40 to 105	AM3352BZCEA30	Samples
AM3352BZCEA30R	ACTIVE	NFBGA	ZCE	298	1000	Green (RoHS & no Sb/Br)	SNAGCU	Level-3-260C-168 HR	-40 to 105	AM3352BZCEA30	Samples
AM3352BZCEA60	ACTIVE	NFBGA	ZCE	298	160	Green (RoHS & no Sb/Br)	SNAGCU	Level-3-260C-168 HR	-40 to 105	AM3352BZCEA60	Samples
AM3352BZCEA60R	ACTIVE	NFBGA	ZCE	298	1000	Green (RoHS & no Sb/Br)	SNAGCU	Level-3-260C-168 HR	-40 to 105	AM3352BZCEA60	Samples
AM3352BZCED30	ACTIVE	NFBGA	ZCE	298	160	Green (RoHS & no Sb/Br)	SNAGCU	Level-3-260C-168 HR	-40 to 90	AM3352BZCED30	Samples
AM3352BZCED60	ACTIVE	NFBGA	ZCE	298	160	Green (RoHS & no Sb/Br)	SNAGCU	Level-3-260C-168 HR	-40 to 90	AM3352BZCED60	Samples
AM3352BZCZ100	ACTIVE	NFBGA	ZCZ	324	126	Green (RoHS & no Sb/Br)	SNAGCU	Level-3-260C-168 HR	0 to 90	AM3352BZCZ100	Samples
AM3352BZCZ30	ACTIVE	NFBGA	ZCZ	324	126	Green (RoHS & no Sb/Br)	SNAGCU	Level-3-260C-168 HR	0 to 90	AM3352BZCZ30	Samples
AM3352BZCZ60	ACTIVE	NFBGA	ZCZ	324	126	Green (RoHS & no Sb/Br)	SNAGCU	Level-3-260C-168 HR	0 to 90	AM3352BZCZ60	Samples
AM3352BZCZ80	ACTIVE	NFBGA	ZCZ	324	126	Green (RoHS & no Sb/Br)	SNAGCU	Level-3-260C-168 HR	0 to 90	AM3352BZCZ80	Samples
AM3352BZCZA100	ACTIVE	NFBGA	ZCZ	324	126	Green (RoHS & no Sb/Br)	SNAGCU	Level-3-260C-168 HR	-40 to 105	AM3352BZCZA100	Samples
AM3352BZCZA30	ACTIVE	NFBGA	ZCZ	324	126	Green (RoHS & no Sb/Br)	SNAGCU	Level-3-260C-168 HR	-40 to 105	AM3352BZCZA30	Samples
AM3352BZCZA60	ACTIVE	NFBGA	ZCZ	324	126	Green (RoHS & no Sb/Br)	SNAGCU	Level-3-260C-168 HR	-40 to 105	AM3352BZCZA60	Samples
AM3352BZCZA80	ACTIVE	NFBGA	ZCZ	324	126	Green (RoHS & no Sb/Br)	SNAGCU	Level-3-260C-168 HR	-40 to 105	AM3352BZCZA80	Samples
AM3352BZCZD30	ACTIVE	NFBGA	ZCZ	324	126	Green (RoHS & no Sb/Br)	SNAGCU	Level-3-260C-168 HR	-40 to 90	AM3352BZCZD30	Samples

Orderable Device	Status (1)	Package Type	Package Drawing	Pins	Package Qty	Eco Plan (2)	Lead/Ball Finish	MSL Peak Temp (3)	Op Temp (°C)	Device Marking (4/5)	Samples
AM3352BZCZD60	ACTIVE	NFBGA	ZCZ	324	126	Green (RoHS & no Sb/Br)	SNAGCU	Level-3-260C-168 HR	-40 to 90	AM3352BZCZD60	Samples
AM3352BZCZD80	ACTIVE	NFBGA	ZCZ	324	126	Green (RoHS & no Sb/Br)	SNAGCU	Level-3-260C-168 HR	-40 to 90	AM3352BZCZD80	Samples
AM3352ZCE27	ACTIVE	NFBGA	ZCE	298	160	Green (RoHS & no Sb/Br)	SNAGCU	Level-3-260C-168 HR	0 to 90	AM3352ZCE27	Samples
AM3352ZCED50	ACTIVE	NFBGA	ZCE	298	160	Green (RoHS & no Sb/Br)	SNAGCU	Level-3-260C-168 HR	-40 to 90	AM3352ZCED50	Samples
AM3352ZCZ60	ACTIVE	NFBGA	ZCZ	324	126	Green (RoHS & no Sb/Br)	SNAGCU	Level-3-260C-168 HR	0 to 90	AM3352ZCZ60	Samples
AM3352ZCZD72	ACTIVE	NFBGA	ZCZ	324	126	Green (RoHS & no Sb/Br)	SNAGCU	Level-3-260C-168 HR	-40 to 90	AM3352ZCZD72	Samples
AM3354BZCE60	ACTIVE	NFBGA	ZCE	298	160	Green (RoHS & no Sb/Br)	SNAGCU	Level-3-260C-168 HR	0 to 90	AM3354BZCE60	Samples
AM3354BZCEA60	ACTIVE	NFBGA	ZCE	298	160	Green (RoHS & no Sb/Br)	SNAGCU	Level-3-260C-168 HR	-40 to 105	AM3354BZCEA60	Samples
AM3354BZCED60	ACTIVE	NFBGA	ZCE	298	160	Green (RoHS & no Sb/Br)	SNAGCU	Level-3-260C-168 HR	-40 to 90	AM3354BZCED60	Samples
AM3354BZCZ100	ACTIVE	NFBGA	ZCZ	324	126	Green (RoHS & no Sb/Br)	SNAGCU	Level-3-260C-168 HR	0 to 90	AM3354BZCZ100	Samples
AM3354BZCZ60	ACTIVE	NFBGA	ZCZ	324	126	Green (RoHS & no Sb/Br)	SNAGCU	Level-3-260C-168 HR	0 to 90	AM3354BZCZ60	Samples
AM3354BZCZ80	ACTIVE	NFBGA	ZCZ	324	126	Green (RoHS & no Sb/Br)	SNAGCU	Level-3-260C-168 HR	0 to 90	AM3354BZCZ80	Samples
AM3354BZCZA100	ACTIVE	NFBGA	ZCZ	324	126	Green (RoHS & no Sb/Br)	SNAGCU	Level-3-260C-168 HR	-40 to 105	AM3354BZCZA100	Samples
AM3354BZCZA60	ACTIVE	NFBGA	ZCZ	324	126	Green (RoHS & no Sb/Br)	SNAGCU	Level-3-260C-168 HR	-40 to 105	AM3354BZCZA60	Samples
AM3354BZCZA80	ACTIVE	NFBGA	ZCZ	324	126	Green (RoHS & no Sb/Br)	SNAGCU	Level-3-260C-168 HR	-40 to 105	AM3354BZCZA80	Samples
AM3354BZCZD60	ACTIVE	NFBGA	ZCZ	324	126	Green (RoHS & no Sb/Br)	SNAGCU	Level-3-260C-168 HR	-40 to 90	AM3354BZCZD60	Samples
AM3354BZCZD80	ACTIVE	NFBGA	ZCZ	324	126	Green (RoHS & no Sb/Br)	SNAGCU	Level-3-260C-168 HR	-40 to 90	AM3354BZCZD80	Samples
AM3354ZCED50	ACTIVE	NFBGA	ZCE	298	160	Green (RoHS & no Sb/Br)	SNAGCU	Level-3-260C-168 HR	-40 to 90	AM3354ZCED50	Samples

Orderable Device	Status (1)	Package Type	Package Drawing	Pins	Package Qty	Eco Plan (2)	Lead/Ball Finish	MSL Peak Temp (3)	Op Temp (°C)	Device Marking (4/5)	Samples
AM3354ZCZ60	ACTIVE	NFBGA	ZCZ	324	126	Green (RoHS & no Sb/Br)	SNAGCU	Level-3-260C-168 HR	0 to 90	AM3354ZCZ60	Samples
AM3354ZCZ80	ACTIVE	NFBGA	ZCZ	324	126	Green (RoHS & no Sb/Br)	SNAGCU	Level-3-260C-168 HR	0 to 90	AM3354ZCZ80	Samples
AM3354ZCZD72	ACTIVE	NFBGA	ZCZ	324	126	Green (RoHS & no Sb/Br)	SNAGCU	Level-3-260C-168 HR	-40 to 90	AM3354ZCZD72	Samples
AM3356BZCZ30	ACTIVE	NFBGA	ZCZ	324	126	Green (RoHS & no Sb/Br)	SNAGCU	Level-3-260C-168 HR	0 to 90	AM3356BZCZ30	Samples
AM3356BZCZ60	ACTIVE	NFBGA	ZCZ	324	126	Green (RoHS & no Sb/Br)	SNAGCU	Level-3-260C-168 HR	0 to 90	AM3356BZCZ60	Samples
AM3356BZCZ80	ACTIVE	NFBGA	ZCZ	324	126	Green (RoHS & no Sb/Br)	SNAGCU	Level-3-260C-168 HR	0 to 90	AM3356BZCZ80	Samples
AM3356BZCZA30	ACTIVE	NFBGA	ZCZ	324	126	Green (RoHS & no Sb/Br)	SNAGCU	Level-3-260C-168 HR	-40 to 105	AM3356BZCZA30	Samples
AM3356BZCZA60	ACTIVE	NFBGA	ZCZ	324	126	Green (RoHS & no Sb/Br)	SNAGCU	Level-3-260C-168 HR	-40 to 105	AM3356BZCZA60	Samples
AM3356BZCZA80	ACTIVE	NFBGA	ZCZ	324	126	Green (RoHS & no Sb/Br)	SNAGCU	Level-3-260C-168 HR	-40 to 105	AM3356BZCZA80	Samples
AM3356BZCZD30	ACTIVE	NFBGA	ZCZ	324	126	Green (RoHS & no Sb/Br)	SNAGCU	Level-3-260C-168 HR	-40 to 90	AM3356BZCZD30	Samples
AM3356BZCZD60	ACTIVE	NFBGA	ZCZ	324	126	Green (RoHS & no Sb/Br)	SNAGCU	Level-3-260C-168 HR	-40 to 90	AM3356BZCZD60	Samples
AM3357BZCZA30	ACTIVE	NFBGA	ZCZ	324	126	Green (RoHS & no Sb/Br)	SNAGCU	Level-3-260C-168 HR	-40 to 105	AM3357BZCZA30	Samples
AM3357BZCZA60	ACTIVE	NFBGA	ZCZ	324	126	Green (RoHS & no Sb/Br)	SNAGCU	Level-3-260C-168 HR	-40 to 105	AM3357BZCZA60	Samples
AM3357BZCZA80	ACTIVE	NFBGA	ZCZ	324	126	Green (RoHS & no Sb/Br)	SNAGCU	Level-3-260C-168 HR	-40 to 105	AM3357BZCZA80	Samples
AM3357BZCZD30	ACTIVE	NFBGA	ZCZ	324	126	Green (RoHS & no Sb/Br)	SNAGCU	Level-3-260C-168 HR	-40 to 90	AM3357BZCZD30	Samples
AM3357BZCZD60	ACTIVE	NFBGA	ZCZ	324	126	Green (RoHS & no Sb/Br)	SNAGCU	Level-3-260C-168 HR	-40 to 90	AM3357BZCZD60	Samples
AM3357ZCZD27	ACTIVE	NFBGA	ZCZ	324	126	Green (RoHS & no Sb/Br)	SNAGCU	Level-3-260C-168 HR	-40 to 90	AM3357ZCZD27	Samples
AM3357ZCZD72	ACTIVE	NFBGA	ZCZ	324	126	Green (RoHS & no Sb/Br)	SNAGCU	Level-3-260C-168 HR	-40 to 90	AM3357ZCZD72	Samples

Orderable Device	Status (1)	Package Type	Package Drawing	Pins	Package Qty	Eco Plan (2)	Lead/Ball Finish	MSL Peak Temp (3)	Op Temp (°C)	Device Marking (4/5)	Samples
AM3358BZCZ100	ACTIVE	NFBGA	ZCZ	324	126	Green (RoHS & no Sb/Br)	SNAGCU	Level-3-260C-168 HR	0 to 90	AM3358BZCZ100	Samples
AM3358BZCZ60	ACTIVE	NFBGA	ZCZ	324	126	Green (RoHS & no Sb/Br)	SNAGCU	Level-3-260C-168 HR	0 to 90	AM3358BZCZ60	Samples
AM3358BZCZ80	ACTIVE	NFBGA	ZCZ	324	126	Green (RoHS & no Sb/Br)	SNAGCU	Level-3-260C-168 HR	0 to 90	AM3358BZCZ80	Samples
AM3358BZCZA100	ACTIVE	NFBGA	ZCZ	324	126	Green (RoHS & no Sb/Br)	SNAGCU	Level-3-260C-168 HR	-40 to 105	AM3358BZCZA100	Samples
AM3358BZCZA80	ACTIVE	NFBGA	ZCZ	324	126	Green (RoHS & no Sb/Br)	SNAGCU	Level-3-260C-168 HR	-40 to 105	AM3358BZCZA80	Samples
AM3359BZCZA80	ACTIVE	NFBGA	ZCZ	324	126	Green (RoHS & no Sb/Br)	SNAGCU	Level-3-260C-168 HR	-40 to 105	AM3359BZCZA80	Samples

(1) The marketing status values are defined as follows:
ACTIVE: Product device recommended for new designs.
LIFEBUY: TI has announced that the device will be discontinued, and a lifetime-buy period is in effect.
NRND: Not recommended for new designs. Device is in production to support existing customers, but TI does not recommend using this part in a new design.
PREVIEW: Device has been announced but is not in production. Samples may or may not be available.
OBSOLETE: TI has discontinued the production of the device.

(2) Eco Plan - The planned eco-friendly classification: Pb-Free (RoHS), Pb-Free (RoHS Exempt), or Green (RoHS & no Sb/Br) - please check http://www.ti.com/productcontent for the latest availability information and additional product content details.
TBD: The Pb-Free/Green conversion plan has not been defined.
Pb-Free (RoHS): TI's terms "Lead-Free" or "Pb-Free" mean semiconductor products that are compatible with the current RoHS requirements for all 6 substances, including the requirement that lead not exceed 0.1% by weight in homogeneous materials. Where designed to be soldered at high temperatures, TI Pb-Free products are suitable for use in specified lead-free processes.
Pb-Free (RoHS Exempt): This component has a RoHS exemption for either 1) lead-based flip-chip solder bumps used between the die and package, or 2) lead-based die adhesive used between the die and leadframe. The component is otherwise considered Pb-Free (RoHS compatible) as defined above.
Green (RoHS & no Sb/Br): TI defines "Green" to mean Pb-Free (RoHS compatible), and free of Bromine (Br) and Antimony (Sb) based flame retardants (Br or Sb do not exceed 0.1% by weight in homogeneous material)

(3) MSL, Peak Temp. -- The Moisture Sensitivity Level rating according to the JEDEC industry standard classifications, and peak solder temperature.

(4) There may be additional marking, which relates to the logo, the lot trace code information, or the environmental category on the device.

(5) Multiple Device Markings will be inside parentheses. Only one Device Marking contained in parentheses and separated by a "~" will appear on a device. If a line is indented then it is a continuation of the previous line and the two combined represent the entire Device Marking for that device.

Important Information and Disclaimer: The information provided on this page represents TI's knowledge and belief as of the date that it is provided. TI bases its knowledge and belief on information provided by third parties, and makes no representation or warranty as to the accuracy of such information. Efforts are underway to better integrate information from third parties. TI has taken and continues to take reasonable steps to provide representative and accurate information but may not have conducted destructive testing or chemical analysis on incoming materials and chemicals. TI and TI suppliers consider certain information to be proprietary, and thus CAS numbers and other limited information may not be available for release.

In no event shall TI's liability arising out of such information exceed the total purchase price of the TI part(s) at issue in this document sold by TI to Customer on an annual basis.

ZCZ (S–PBGA–N324) PLASTIC BALL GRID ARRAY

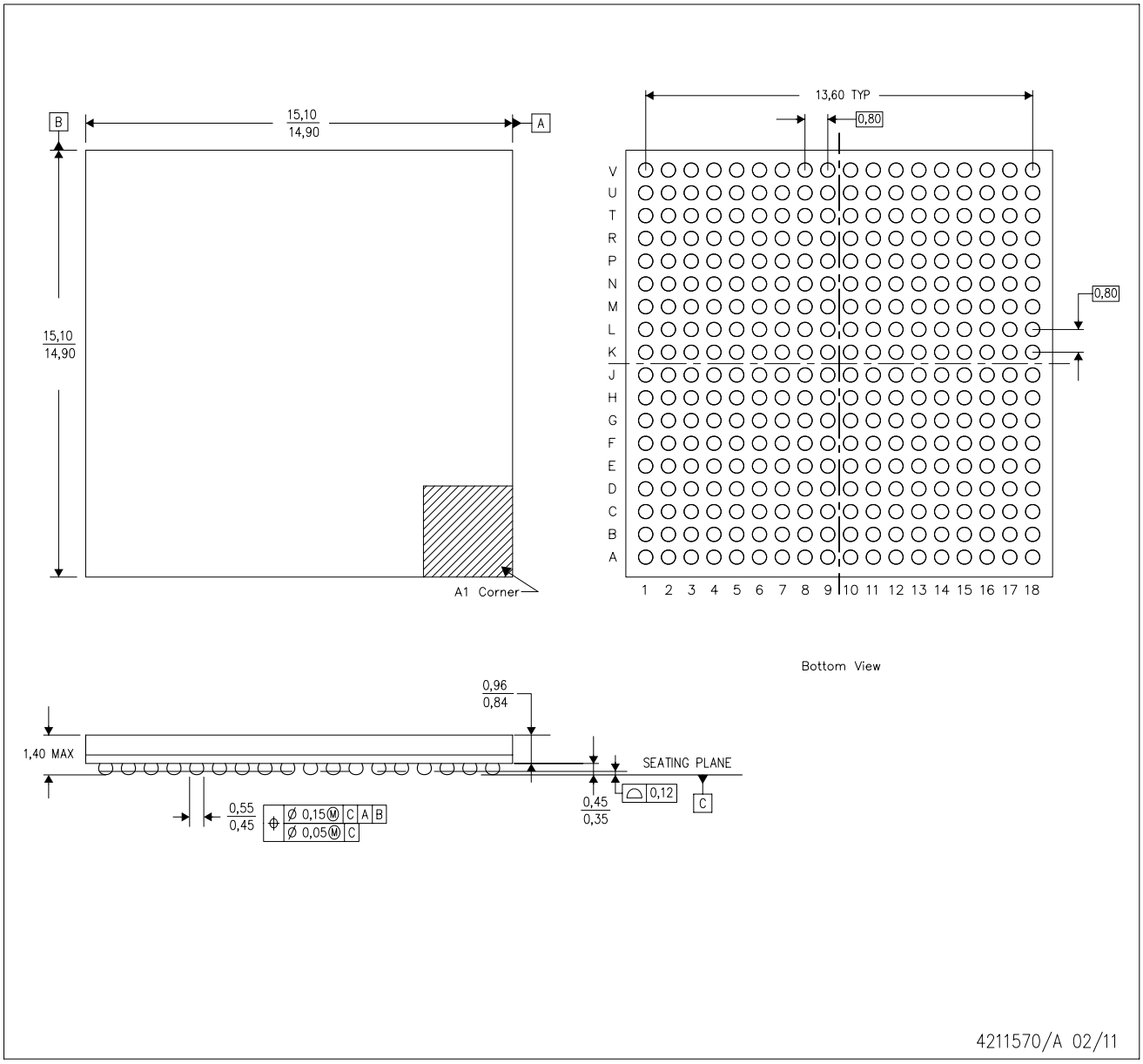

NOTES:
A. All linear dimensions are in millimeters. Dimensioning and tolerancing per ASME Y14.5M–1994.
B. This drawing is subject to change without notice.
C. This is a Pb–free solder ball design.

ZCE (S–PBGA–N298) PLASTIC BALL GRID ARRAY

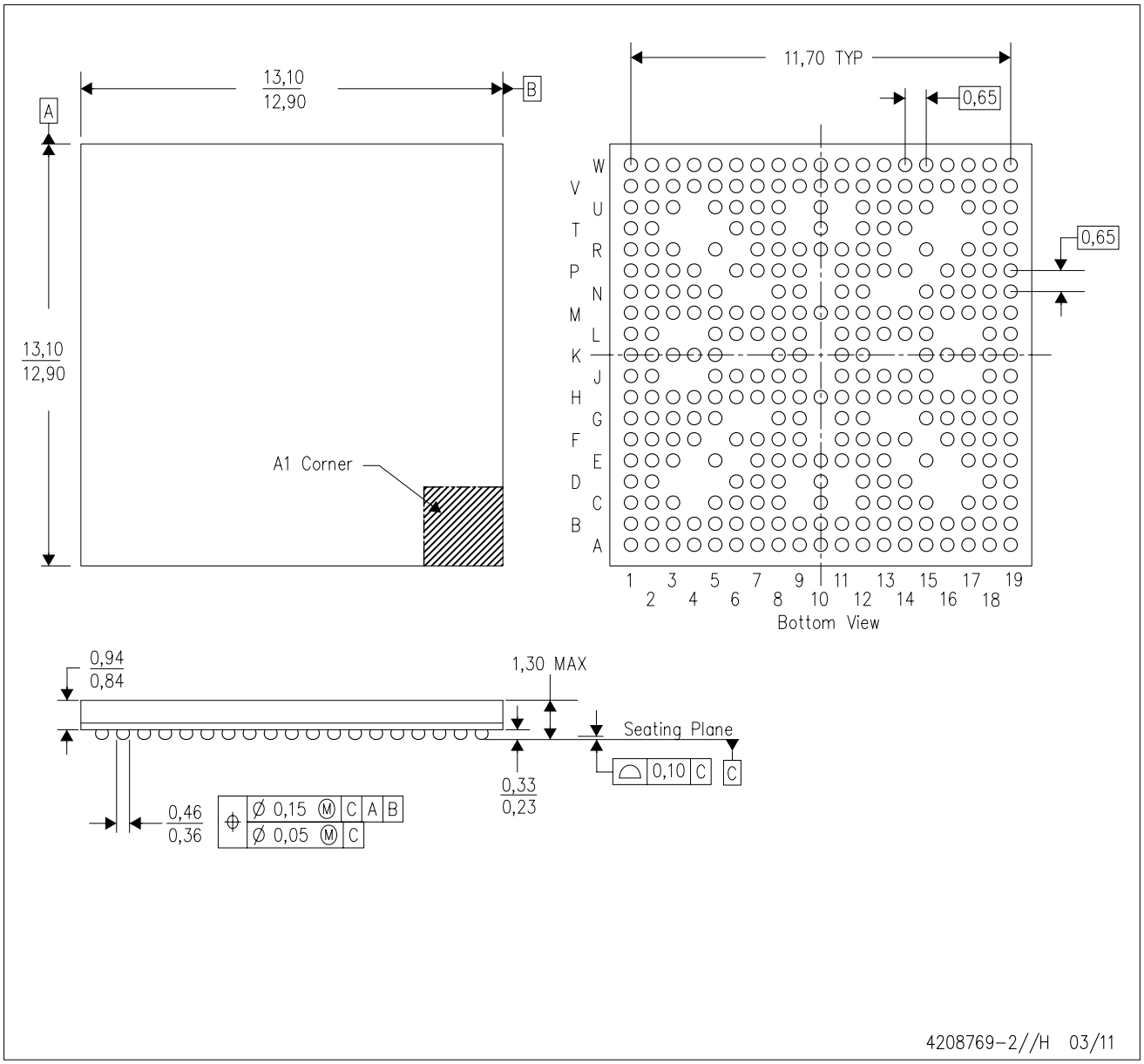

NOTES:
A. All linear dimensions are in millimeters. Dimensioning and tolerancing per ASME Y14.5M–1994.
B. This drawing is subject to change without notice.
C. This is a Pb–free solder ball design.

IMPORTANT NOTICE

Texas Instruments Incorporated and its subsidiaries (TI) reserve the right to make corrections, enhancements, improvements and other changes to its semiconductor products and services per JESD46, latest issue, and to discontinue any product or service per JESD48, latest issue. Buyers should obtain the latest relevant information before placing orders and should verify that such information is current and complete. All semiconductor products (also referred to herein as “components”) are sold subject to TI’s terms and conditions of sale supplied at the time of order acknowledgment.

TI warrants performance of its components to the specifications applicable at the time of sale, in accordance with the warranty in TI’s terms and conditions of sale of semiconductor products. Testing and other quality control techniques are used to the extent TI deems necessary to support this warranty. Except where mandated by applicable law, testing of all parameters of each component is not necessarily performed.

TI assumes no liability for applications assistance or the design of Buyers’ products. Buyers are responsible for their products and applications using TI components. To minimize the risks associated with Buyers’ products and applications, Buyers should provide adequate design and operating safeguards.

TI does not warrant or represent that any license, either express or implied, is granted under any patent right, copyright, mask work right, or other intellectual property right relating to any combination, machine, or process in which TI components or services are used. Information published by TI regarding third-party products or services does not constitute a license to use such products or services or a warranty or endorsement thereof. Use of such information may require a license from a third party under the patents or other intellectual property of the third party, or a license from TI under the patents or other intellectual property of TI.

Reproduction of significant portions of TI information in TI data books or data sheets is permissible only if reproduction is without alteration and is accompanied by all associated warranties, conditions, limitations, and notices. TI is not responsible or liable for such altered documentation. Information of third parties may be subject to additional restrictions.

Resale of TI components or services with statements different from or beyond the parameters stated by TI for that component or service voids all express and any implied warranties for the associated TI component or service and is an unfair and deceptive business practice. TI is not responsible or liable for any such statements.

Buyer acknowledges and agrees that it is solely responsible for compliance with all legal, regulatory and safety-related requirements concerning its products, and any use of TI components in its applications, notwithstanding any applications-related information or support that may be provided by TI. Buyer represents and agrees that it has all the necessary expertise to create and implement safeguards which anticipate dangerous consequences of failures, monitor failures and their consequences, lessen the likelihood of failures that might cause harm and take appropriate remedial actions. Buyer will fully indemnify TI and its representatives against any damages arising out of the use of any TI components in safety-critical applications.

In some cases, TI components may be promoted specifically to facilitate safety-related applications. With such components, TI’s goal is to help enable customers to design and create their own end-product solutions that meet applicable functional safety standards and requirements. Nonetheless, such components are subject to these terms.

No TI components are authorized for use in FDA Class III (or similar life-critical medical equipment) unless authorized officers of the parties have executed a special agreement specifically governing such use.

Only those TI components which TI has specifically designated as military grade or “enhanced plastic” are designed and intended for use in military/aerospace applications or environments. Buyer acknowledges and agrees that any military or aerospace use of TI components which have ***not*** been so designated is solely at the Buyer's risk, and that Buyer is solely responsible for compliance with all legal and regulatory requirements in connection with such use.

TI has specifically designated certain components as meeting ISO/TS16949 requirements, mainly for automotive use. In any case of use of non-designated products, TI will not be responsible for any failure to meet ISO/TS16949.

Products		**Applications**	
Audio	www.ti.com/audio	Automotive and Transportation	www.ti.com/automotive
Amplifiers	amplifier.ti.com	Communications and Telecom	www.ti.com/communications
Data Converters	dataconverter.ti.com	Computers and Peripherals	www.ti.com/computers
DLP® Products	www.dlp.com	Consumer Electronics	www.ti.com/consumer-apps
DSP	dsp.ti.com	Energy and Lighting	www.ti.com/energy
Clocks and Timers	www.ti.com/clocks	Industrial	www.ti.com/industrial
Interface	interface.ti.com	Medical	www.ti.com/medical
Logic	logic.ti.com	Security	www.ti.com/security
Power Mgmt	power.ti.com	Space, Avionics and Defense	www.ti.com/space-avionics-defense
Microcontrollers	microcontroller.ti.com	Video and Imaging	www.ti.com/video
RFID	www.ti-rfid.com		
OMAP Applications Processors	www.ti.com/omap	**TI E2E Community**	e2e.ti.com
Wireless Connectivity	www.ti.com/wirelessconnectivity		

Mailing Address: Texas Instruments, Post Office Box 655303, Dallas, Texas 75265
Copyright © 2013, Texas Instruments Incorporated