SMBJ Transient Voltage Suppressor Diode Series

General Information

The SMB series is designed to protect voltage sensitive components from high voltage, high energy transients. They have excellent clamping capability, high surge capability, low zener impedance and fast response time. The SMB series is supplied in YINT Semiconductor's exclusive, cost-effective, highly reliable and is ideally suited for use in communication systems, automotive, numerical controls, process controls, medical equipment, business machines, power supplies and many other industrial/consumer Applications.

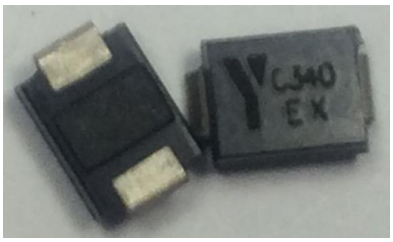

Molded plastic
glass passivated junction.

Features

- Case: DO-214AA/SMB
- For surface mounted applications in order to optimize board space.
- Polarity: Color band denoted positive end (cathode) except Bidirectional.
- Typical failure mode is short from over-specified voltage or current
- High Temperature soldering:260°C/10 seconds at terminals.
- Terminal: Solder plated, solderable per MIL-STD-750,Method 2026.

Applications

TVS devices are ideal for the protection of I/O Interfaces, V_{CC} bus and other vulnerable circuits used in Telecom, Computer, Industrial and Consumer electronic applications.

Electrical Characteristics (@ T_A = 25℃ Unless Otherwise Noted)

Parameter	Symbol	Value	Unit
Minimum Peak Pulse Power Dissipation (T = 1 ms) (note1 note 2)	P_{PK}	600	Watts
Peak Forward Surge Current 8.3 ms Single Half Sine Wave Superimposed on Rated Load (JEDEC Method) (Note 3)	I_{FSM}	100	Amps
Steady State Power Dissipation @ TL = 75 °C	$P_{M(AV)}$	5.0	Watts
Maximum Instantaneous Forward Voltage @ I_{PP} = 50 A (For Unidirectional Units Only)(note4 note 5)	V_F	3.5/5	Volts
Operating Temperature Range	T_J	-55 to +150	°C
Storage Temperature Range	T_{STG}	-55 to +150	°C

NOTES:

1. Non-repetitive current pulse, per Pulse Waveform graph and derated above T_A = 25 °C per Pulse Derating Curve.
2. Thermal Resistance Junction to Lead.
3. 8.3 ms Single Half-Sine Wave duty cycle = 4 pulses maximum per minute (unidirectional units only).
4. Single Phase, Half Wave, 60 Hz, resistive or inductive load. For capacitive load, derate current by 20 %.
5. V_F<3.5V for V_{BR}< 200V and V_F <5.0V for V_{BR}> 201V.

Download from alldatasheet.com

Electrical Characteristics (T_A = 25 °C unless otherwise noted)

Part Number (Bi)	Part Number (Uni)	MARKING		Reverse Stand off Voltage V_R (Volts)	Breakdown Voltage V_{BR} (Volts)@I_T		Test Current I_T(mA)	Maximum Reverse Leakage I_R @ V_R(μA)	Maximum Peak Pulse Current Ipp(A)	Maximum Clamping Voltage V_C @I_{pp}(V)
		BI	UNI		Min .V	Max .V				
SMBJ5.0CA	SMBJ5.0A	AE	KE	5.0	6.40	7.00	10	500	65.2	9.2
SMBJ6.0CA	SMBJ6.0A	AG	KG	6.0	6.67	7.37	10	500	58.3	10.3
SMBJ 6.5CA	SMBJ 6.5A	AK	KK	6.5	7.22	7.9	10	300	53.6	11.2
SMBJ7.0CA	SMBJ7.0 A	AM	KM	7.0	7.78	8.60	10	200	50.0	12.0
SMBJ7.5CA	SMBJ7.5A	AP	KP	7.5	8.33	9.21	1	100	46.6	12.9
SMBJ8.0CA	SMBJ8.0A	AR	KR	8.0	8.89	9.83	1	50	44.2	13.6
SMBJ8.5CA	SMBJ8.5 A	AT	KT	8.5	9.44	10.40	1	20	41.7	14.4
SMBJ9.0CA	SMBJ9.0 A	AV	KV	9.0	10.00	11.10	1	10	39.0	15.4
SMBJ10CA	SMBJ10A	AX	KX	10.0	11.10	12.30	1	5	35.3	17.0
SMBJ11CA	SMBJ11A	AZ	KZ	11.0	12.20	13.50	1	1	33.0	18.2
SMBJ12CA	SMBJ12A	BE	LE	12.0	13.30	14.70	1	1	30.2	19.9
SMBJ13CA	SMBJ13A	BG	LG	13.0	14.40	15.90	1	1	28.0	21.5
SMBJ14CA	SMBJ14A	BK	LK	14.0	15.60	17.20	1	1	25.9	23.2
SMBJ15CA	SMBJ15A	BM	LM	15.0	16.70	18.50	1	1	24.6	24.4
SMBJ16CA	SMBJ16A	BP	LP	16.0	17.80	19.70	1	1	23.1	26.0
SMBJ17CA	SMBJ17A	BR	LR	17.0	18.90	20.90	1	1	21.8	27.6
SMBJ18CA	SMBJ18A	BT	LT	18.0	20.00	22.10	1	1	20.6	29.2
SMBJ20CA	SMBJ20A	BV	LV	20.0	22.20	24.50	1	1	18.6	32.4
SMBJ22CA	SMBJ22A	BX	LX	22.0	24.40	26.90	1	1	16.9	35.5
SMBJ24CA	SMBJ24A	BZ	LZ	24.0	26.70	29.50	1	1	15.5	38.9
SMBJ26CA	SMBJ26A	CE	ME	26.0	28.90	31.90	1	1	14.3	42.1
SMBJ28CA	SMBJ28A	CG	MG	28.0	31.10	34.40	1	1	13.3	45.4
SMBJ30CA	SMBJ30A	CK	MK	30.0	33.30	36.80	1	1	12.4	48.4
SMBJ33CA	SMBJ33A	CM	MM	33.0	36.70	40.60	1	1	11.3	53.3
SMBJ36CA	SMBJ36A	CP	MP	36.0	40.00	44.20	1	1	10.4	58.1
SMBJ40CA	SMBJ40A	CR	MR	40.0	44.40	49.10	1	1	9.3	64.5
SMBJ43CA	SMBJ43A	CT	MT	43.0	47.80	52.80	1	1	8.7	69.4
SMBJ45CA	SMBJ45A	CV	MV	45.0	50.00	55.30	1	1	8.3	72.7
SMBJ48CA	SMBJ48A	CX	MX	48.0	53.30	58.90	1	1	7.8	77.4
SMBJ51CA	SMBJ51A	CZ	MZ	51.0	56.70	62.70	1	1	7.3	82.4
SMBJ54CA	SMBJ54A	DE	NE	54.0	60.00	66.30	1	1	6.9	87.1
SMBJ58CA	SMBJ58A	DG	NG	58.0	64.40	71.20	1	1	6.5	93.6
SMBJ60CA	SMBJ60A	DK	NK	60.0	66.70	73.70	1	1	6.2	96.8
SMBJ64CA	SMBJ64A	DM	NM	64.0	71.10	78.60	1	1	5.9	103.0
SMBJ70CA	SMBJ70A	DP	NP	70.0	77.80	86.00	1	1	5.3	113.0
SMBJ75CA	SMBJ75A	DR	NR	75.0	83.30	92.10	1	1	5.0	121.0

Download from alldatasheet.com

Part Number (Bi)	Part Number (Uni)	MARKING		Reverse Stand off Voltage V_R (Volts)	Breakdown Voltage V_{BR} (Volts)@I_T		Test Current I_T(mA)	Maximum Reverse Leakage I_R @ V_R(μA)	Maximum Peak Pulse Current Ipp(A)	Maximum Clamping Voltage V_C @I_{pp}(V)
		BI	UNI		Min .V	Max .V				
SMBJ78CA	SMBJ78A	DT	NT	78.0	86.70	95.80	1	1	4.8	126.0
SMBJ85CA	SMBJ85A	DV	NV	85.0	94.4	104.0	1	1	4.4	137.0
SMBJ90CA	SMBJ90A	DX	NX	90.0	100.0	111.0	1	1	4.1	146.0
SMBJ100CA	SMBJ100A	DZ	NZ	100.0	111.0	123.0	1	1	3.7	162.0
SMBJ110CA	SMBJ110A	EE	PE	110.0	122.0	135.0	1	1	3.4	177.0
SMBJ120CA	SMBJ120A	EG	PG	120.0	133.0	147.0	1	1	3.1	193.0
SMBJ130CA	SMBJ130A	EK	PK	130.0	144.0	159.0	1	1	2.9	209.0
SMBJ150CA	SMBJ150A	EM	PM	150.0	167.0	185.0	1	1	2.5	243.0
SMBJ160CA	SMBJ160A	EP	PP	160.0	178.0	197.0	1	1	2.3	259.0
SMBJ170CA	SMBJ170A	ER	PR	170.0	189.0	209.0	1	1	2.2	275.0
SMBJ180CA	SMBJ180A	ET	PT	180.0	201.0	222.0	1	1	2.1	292.0
SMBJ190CA	SMBJ190A	EC	PA	190.0	211.0	233.0	1	1	2.0	308.0
SMBJ200CA	SMBJ200A	EV	PV	200.0	224.0	247.0	1	1	1.9	324.0
SMBJ210CA	SMBJ210A	ED	PB	210.0	237.0	263.0	1	1	1.8	340.0
SMBJ220CA	SMBJ220A	EX	PX	220.0	246.0	272.0	1	1	1.7	356.0
SMBJ250CA	SMBJ250A	EZ	PZ	250.0	279.0	309.0	1	1	1.5	405.0
SMBJ300CA	SMBJ300A	FE	QE	300.0	335.0	371.0	1	1	1.3	486.0
SMBJ350CA	SMBJ350A	FG	QG	350.0	391.0	432.0	1	1	1.1	567.0
SMBJ400CA	SMBJ400A	FK	QK	400.0	447.0	494.0	1	1	0.9	648.0
SMBJ440CA	SMBJ440A	FM	QM	440.0	492.0	543.0	1	1	0.9	713.0

Notes: For bidirectional devices with a V_R of 10 volts or less, the I_R limit is double.

I-V Curve Characteristics

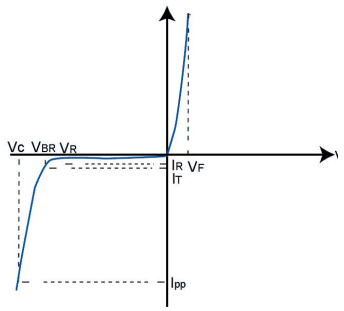

Uni-directional

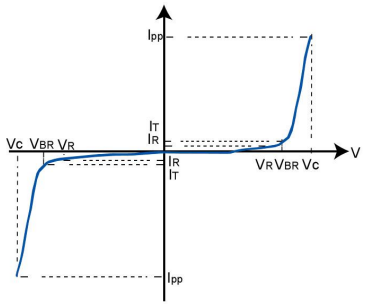

Bi-directional

Symbol	Parameter
I_{PP}	Maximum Reverse Peak Pulse Current
V_C	Clamping Voltage @ I_{PP}
V_{RWM}	Working Peak Reverse Voltage
I_R	Maximum Reverse Leakage Current @V_{RWM}
V_{BR}	Breakdown Voltage @ I_T(Test Current)

Download from alldatasheet.com

Rating & Characteristic Curves

Figure 1- Pulse Derating Curve

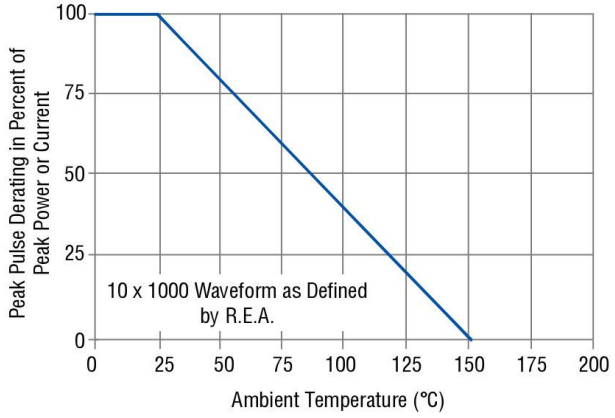

Figure 2- Maximum Non-Repetitive Surge Current

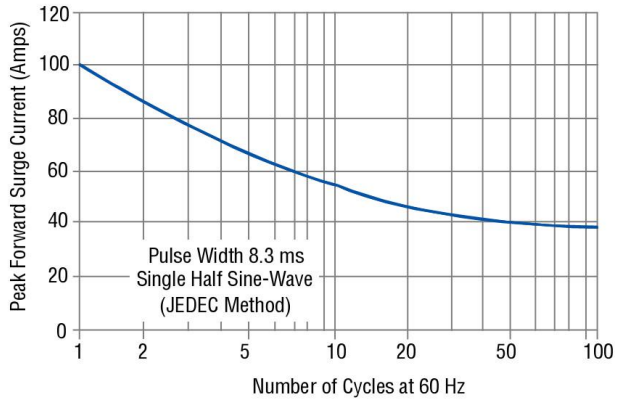

Figure 3- Typical Junction Capacitance

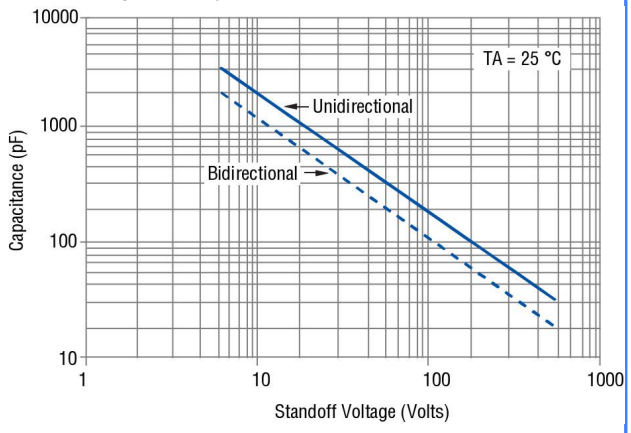

Figure 4- Pulse Waveform

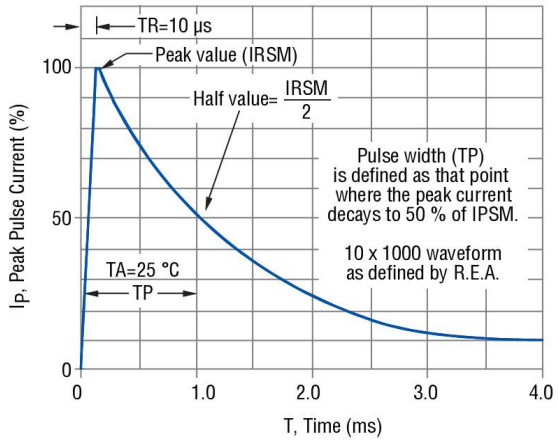

Figure 5- Steady State Power Derating Curve

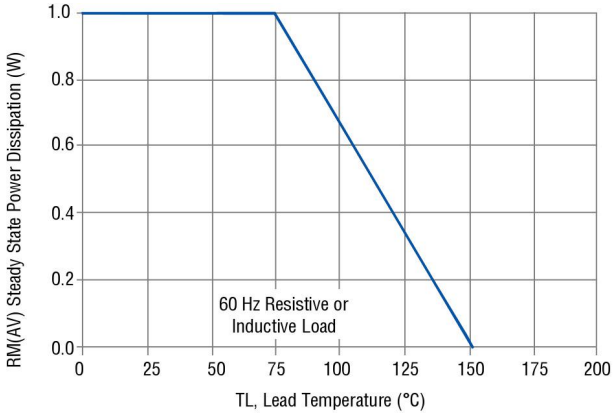

Figure 6- Pulse Rating Curve

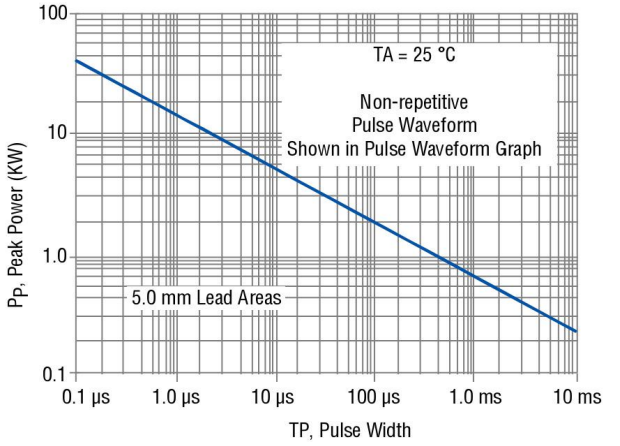

Download from alldatasheet.com

PACKAGE OUTLINE DIMENSIONS in inches (millimeters)

DO-214AA (SMB)

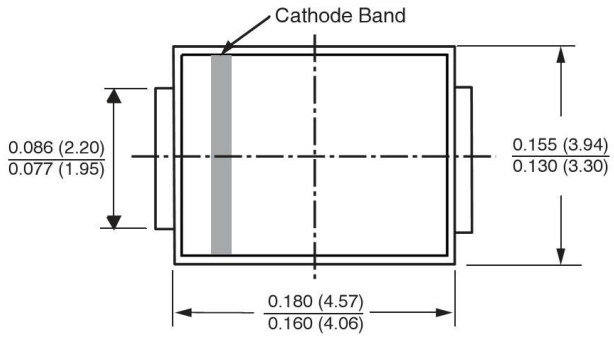

Mounting Pad Layout

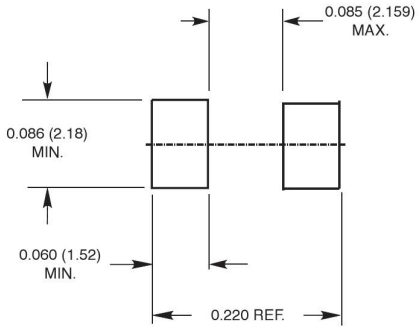

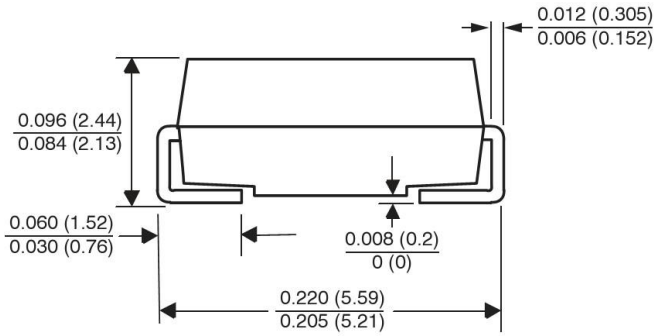

Part Numbering System

SMBJ XXX CA

Types A: Uni-Polar
CA: Bi-Polar

Stand-off Voltage
e.g. 6.5=6.5V 30=30.0V

Peak pulse power
e.g. SMA=400W SMB=600W
SMC=1500W SMD=3000W
P6SMB=600W

Part Marking System

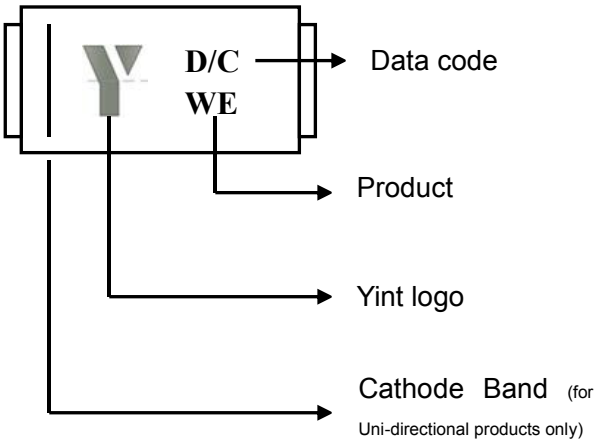

Disclaimer

Specifications are subject to change without notice.

The device characteristics and parameters in this data sheet can and do vary in different applications and actual device performance may vary over time.

Users should verify actual device performance in their specific applications.

Download from alldatasheet.com