International
IOR Rectifier

PD -97410

IRFH5300PbF

HEXFET® Power MOSFET

V_{DS}	30	V
$R_{DS(on)\ max}$ (@V_{GS} = 10V)	1.4	mΩ
$Q_{g\ (typical)}$	50	nC
$R_{G\ (typical)}$	1.3	Ω
I_D (@$T_{c(Bottom)}$ = 25°C)	100⑥	A

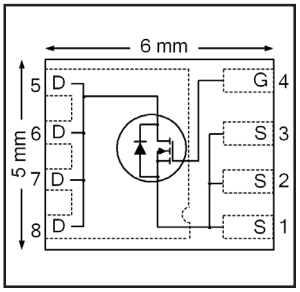

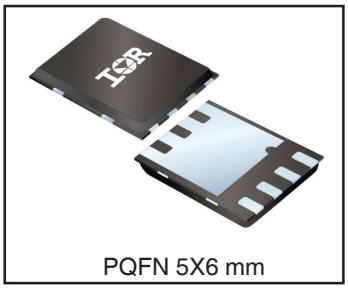

Applications

- OR-ing MOSFET for 12V (typical) Bus in-Rush Current
- Battery Operated DC Motor Inverter MOSFET

Features and Benefits

Features		Benefits
Low R_{DSon} (≤ 1.4mΩ)		Lower Conduction Losses
Low Thermal Resistance to PCB (≤ 0.5°C/W)		Enable better thermal dissipation
100% Rg tested		Increased Reliability
Low Profile (≤ 0.9 mm)	results in	Increased Power Density
Industry-Standard Pinout	⇒	Multi-Vendor Compatibility
Compatible with Existing Surface Mount Techniques		Easier Manufacturing
RoHS Compliant Containing no Lead, no Bromide and no Halogen		Environmentally Friendlier
MSL1, Industrial Qualification		Increased Reliability

Orderable part number	Package Type	Standard Pack		Note
		Form	Quantity	
IRFH5300TRPBF	PQFN 5mm x 6mm	Tape and Reel	4000	
IRFH5300TR2PBF	PQFN 5mm x 6mm	Tape and Reel	400	

Absolute Maximum Ratings

	Parameter	Max.	Units
V_{DS}	Drain-to-Source Voltage	30	V
V_{GS}	Gate-to-Source Voltage	± 20	
I_D @ T_A = 25°C	Continuous Drain Current, V_{GS} @ 10V	40	A
I_D @ T_A = 70°C	Continuous Drain Current, V_{GS} @ 10V	32	
I_D @ $T_{C(Bottom)}$ = 25°C	Continuous Drain Current, V_{GS} @ 10V	100 ⑥	
I_D @ $T_{C(Bottom)}$ = 100°C	Continuous Drain Current, V_{GS} @ 10V	100 ⑥	
I_{DM}	Pulsed Drain Current ①	400	
P_D @T_A = 25°C	Power Dissipation ⑤	3.6	W
P_D @ $T_{C(Bottom)}$ = 25°C	Power Dissipation ⑤	250	
	Linear Derating Factor ⑤	0.029	W/°C
T_J T_{STG}	Operating Junction and Storage Temperature Range	-55 to + 150	°C

Notes ① through ⑥ are on page 8

9/17/09

Static @ T_J = 25°C (unless otherwise specified)

	Parameter	Min.	Typ.	Max.	Units	Conditions
BV_{DSS}	Drain-to-Source Breakdown Voltage	30	—	—	V	V_{GS} = 0V, I_D = 250μA
$\Delta BV_{DSS}/\Delta T_J$	Breakdown Voltage Temp. Coefficient	—	0.02	—	V/°C	Reference to 25°C, I_D = 1mA
$R_{DS(on)}$	Static Drain-to-Source On-Resistance	—	1.1	1.4	mΩ	V_{GS} = 10V, I_D = 50A ③
		—	1.7	2.1		V_{GS} = 4.5V, I_D = 50A ③
$V_{GS(th)}$	Gate Threshold Voltage	1.35	1.8	2.35	V	V_{DS} = V_{GS}, I_D = 150μA
$\Delta V_{GS(th)}$	Gate Threshold Voltage Coefficient	—	-6.2	—	mV/°C	
I_{DSS}	Drain-to-Source Leakage Current	—	—	5.0	μA	V_{DS} = 24V, V_{GS} = 0V
		—	—	150		V_{DS} = 24V, V_{GS} = 0V, T_J = 125°C
I_{GSS}	Gate-to-Source Forward Leakage	—	—	100	nA	V_{GS} = 20V
	Gate-to-Source Reverse Leakage	—	—	-100		V_{GS} = -20V
gfs	Forward Transconductance	190	—	—	S	V_{DS} = 15V, I_D = 50A
Q_g	Total Gate Charge	—	120	—	nC	V_{GS} = 10V, V_{DS} = 15V, I_D = 50A
Q_g	Total Gate Charge	—	50	75	nC	V_{DS} = 15V V_{GS} = 4.5V I_D = 50A See Fig.17 & 18
Q_{gs1}	Pre-Vth Gate-to-Source Charge	—	12	—		
Q_{gs2}	Post-Vth Gate-to-Source Charge	—	6.5	—		
Q_{gd}	Gate-to-Drain Charge	—	16	—		
Q_{godr}	Gate Charge Overdrive	—	16	—		
Q_{sw}	Switch Charge (Q_{gs2} + Q_{gd})	—	23	—		
Q_{oss}	Output Charge	—	30	—	nC	V_{DS} = 16V, V_{GS} = 0V
R_G	Gate Resistance	—	1.3	—	Ω	
$t_{d(on)}$	Turn-On Delay Time	—	26	—	ns	V_{DD} = 15V, V_{GS} = 4.5V I_D = 50A R_G=1.8Ω See Fig.15
t_r	Rise Time	—	30	—		
$t_{d(off)}$	Turn-Off Delay Time	—	31	—		
t_f	Fall Time	—	13	—		
C_{iss}	Input Capacitance	—	7200	—	pF	V_{GS} = 0V V_{DS} = 15V f = 1.0MHz
C_{oss}	Output Capacitance	—	1360	—		
C_{rss}	Reverse Transfer Capacitance	—	590	—		

Avalanche Characteristics

	Parameter	Typ.	Max.	Units
E_{AS}	Single Pulse Avalanche Energy ②	—	420	mJ
I_{AR}	Avalanche Current ①	—	50	A

Diode Characteristics

	Parameter	Min.	Typ.	Max.	Units	Conditions
I_S	Continuous Source Current (Body Diode)	—	—	100 ⑥	A	MOSFET symbol showing the integral reverse p-n junction diode. 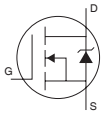
I_{SM}	Pulsed Source Current (Body Diode) ①	—	—	400		
V_{SD}	Diode Forward Voltage	—	—	1.0	V	T_J = 25°C, I_S = 50A, V_{GS} = 0V ③
t_{rr}	Reverse Recovery Time	—	34	51	ns	T_J = 25°C, I_F = 50A, V_{DD} = 15V
Q_{rr}	Reverse Recovery Charge	—	68	100	nC	di/dt = 200A/μs ③
t_{on}	Forward Turn-On Time	Time is dominated by parasitic Inductance				

Thermal Resistance

	Parameter	Typ.	Max.	Units
$R_{\theta JC}$ (Bottom)	Junction-to-Case ④	—	0.5	°C/W
$R_{\theta JC}$ (Top)	Junction-to-Case ④	—	15	
$R_{\theta JA}$	Junction-to-Ambient ⑤	—	35	
$R_{\theta JA}$ (<10s)	Junction-to-Ambient ⑤	—	21	

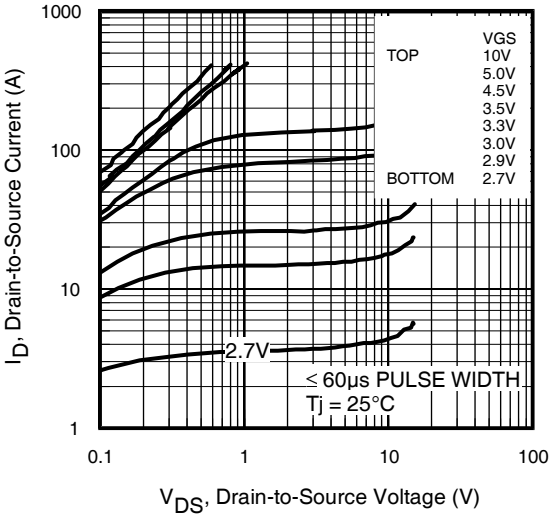

Fig 1. Typical Output Characteristics

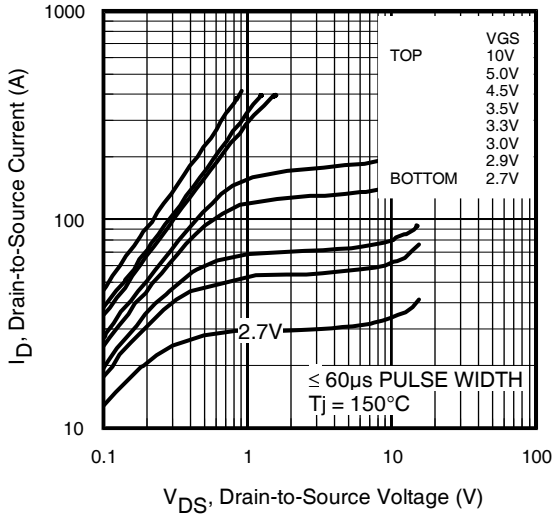

Fig 2. Typical Output Characteristics

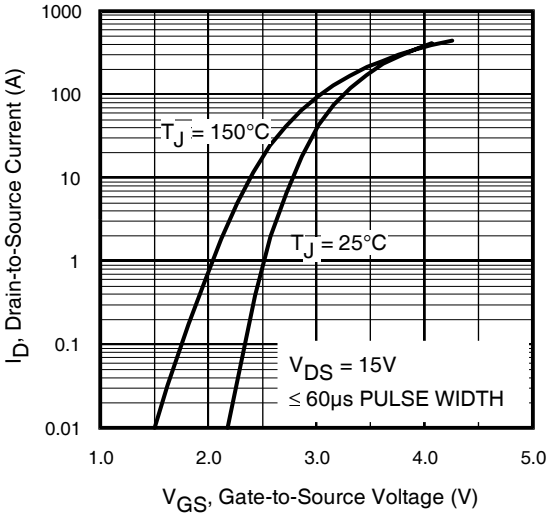

Fig 3. Typical Transfer Characteristics

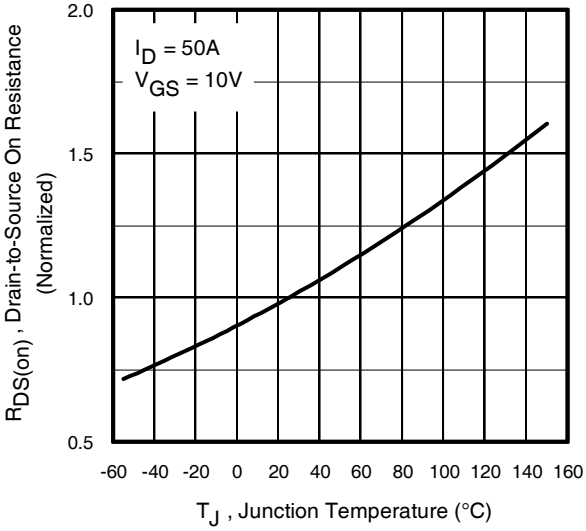

Fig 4. Normalized On-Resistance Vs. Temperature

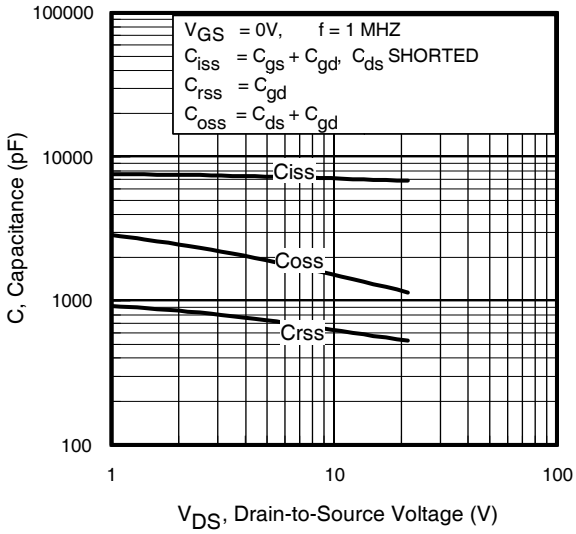

Fig 5. Typical Capacitance Vs.Drain-to-Source Voltage

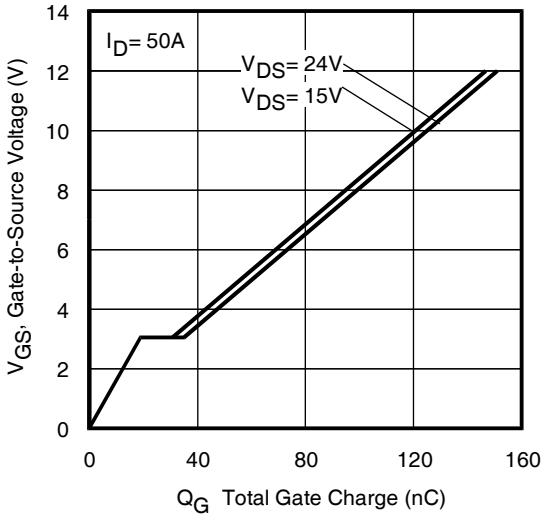

Fig 6. Typical Gate Charge Vs.Gate-to-Source Voltage

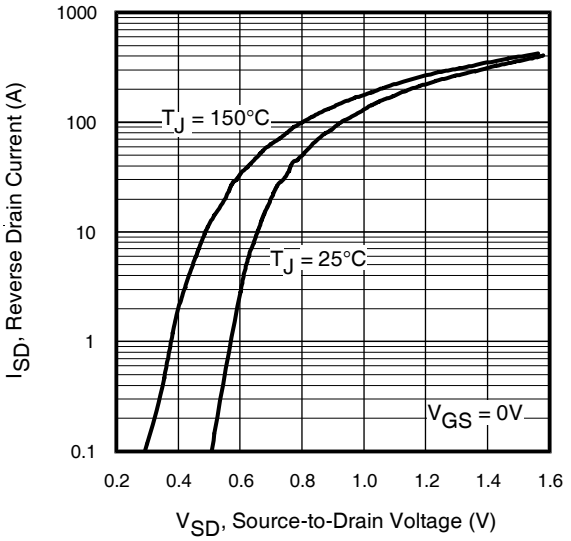

Fig 7. Typical Source-Drain Diode Forward Voltage

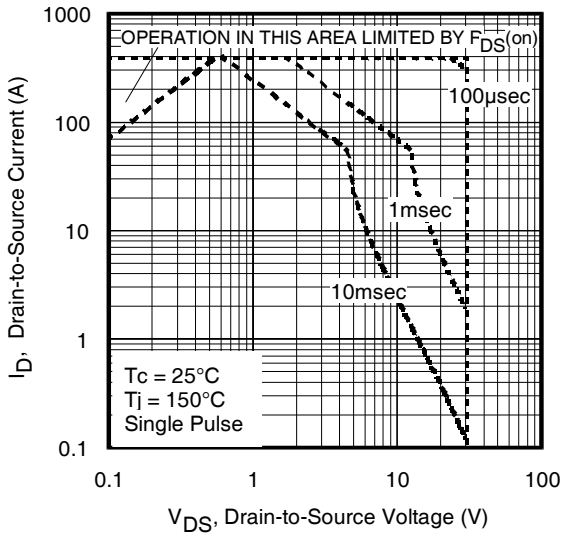

Fig 8. Maximum Safe Operating Area

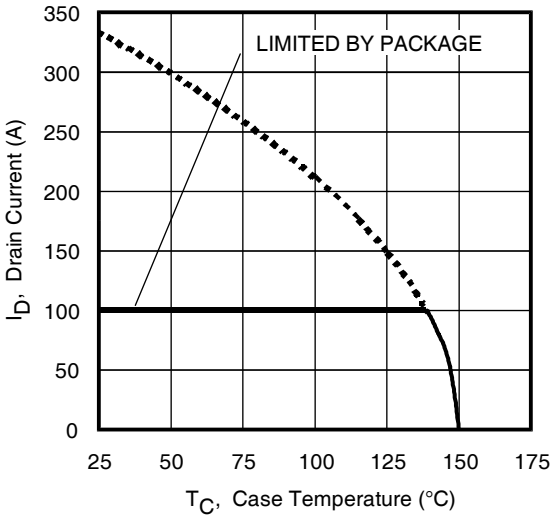

Fig 9. Maximum Drain Current Vs. Case (Bottom) Temperature

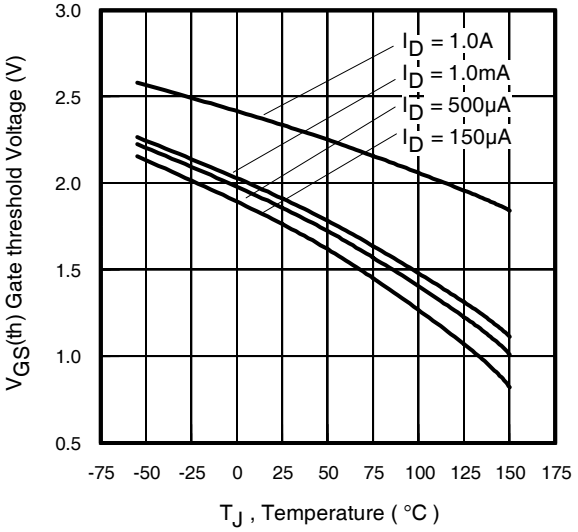

Fig 10. Threshold Voltage Vs. Temperature

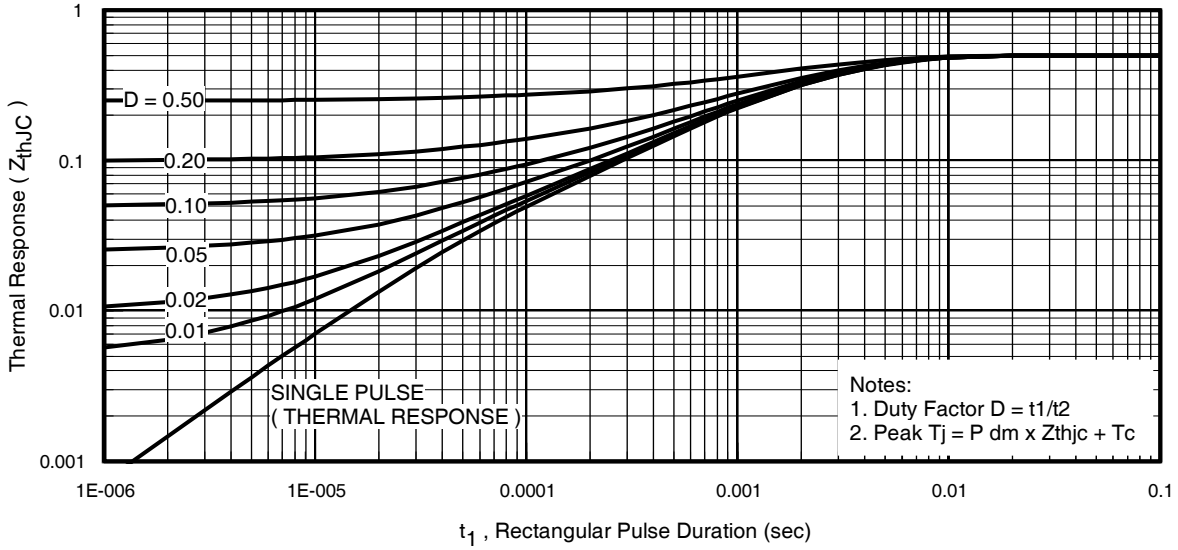

Fig 11. Maximum Effective Transient Thermal Impedance, Junction-to-Case (Bottom)

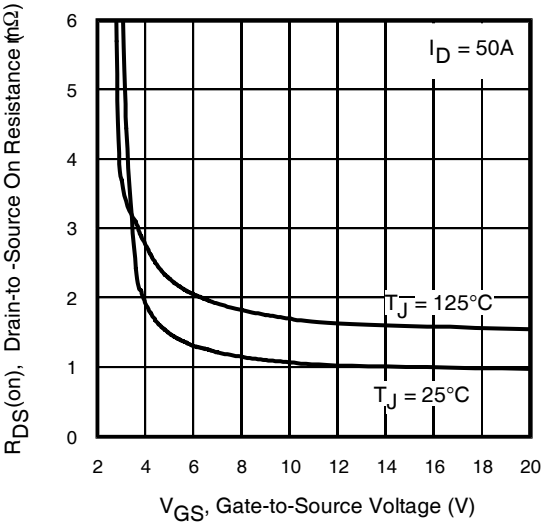

Fig 12. On-Resistance vs. Gate Voltage

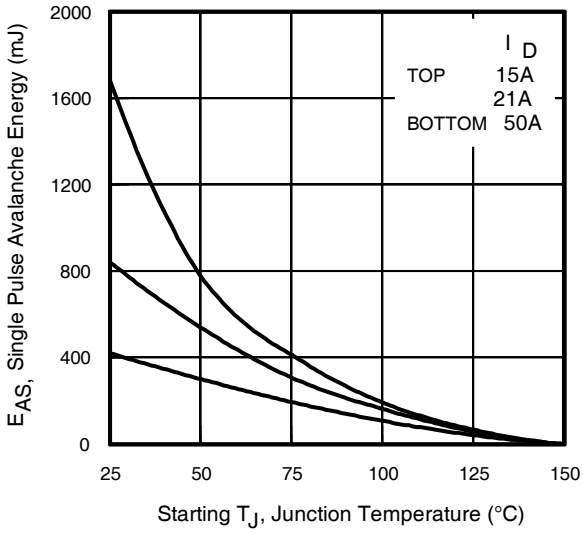

Fig 13. Maximum Avalanche Energy vs. Drain Current

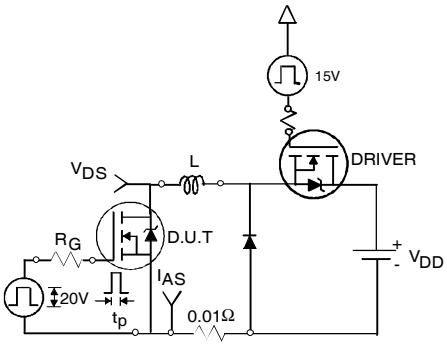

Fig 14a. Unclamped Inductive Test Circuit

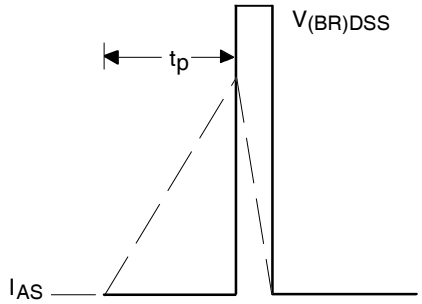

Fig 14b. Unclamped Inductive Waveforms

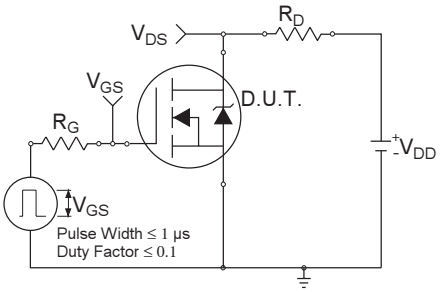

Fig 15a. Switching Time Test Circuit

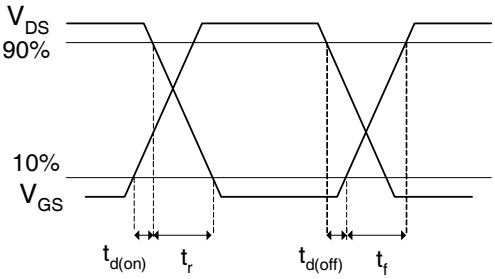

Fig 15b. Switching Time Waveforms

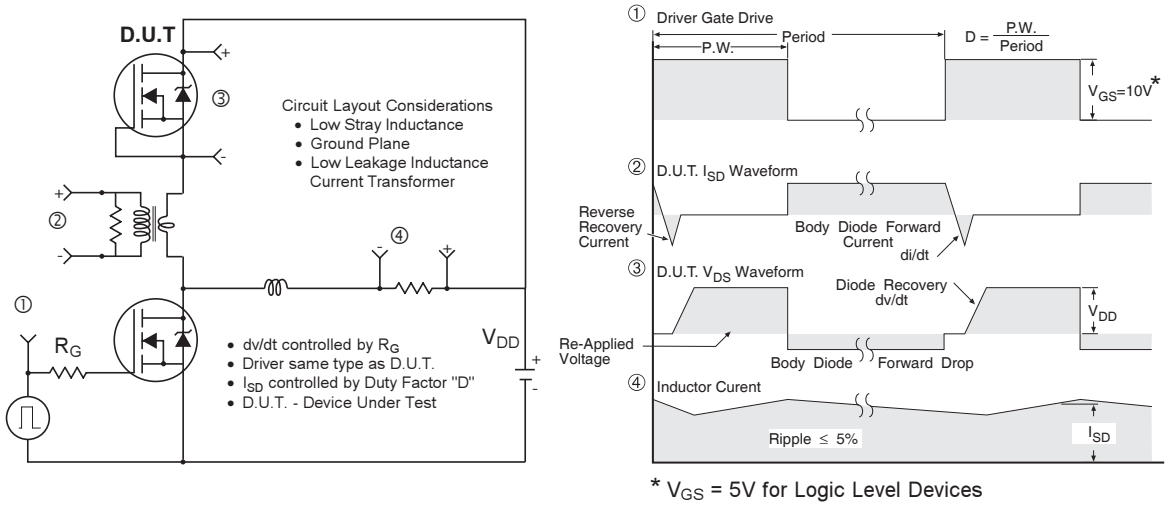

Fig 16. Peak Diode Recovery dv/dt Test Circuit for N-Channel HEXFET® Power MOSFETs

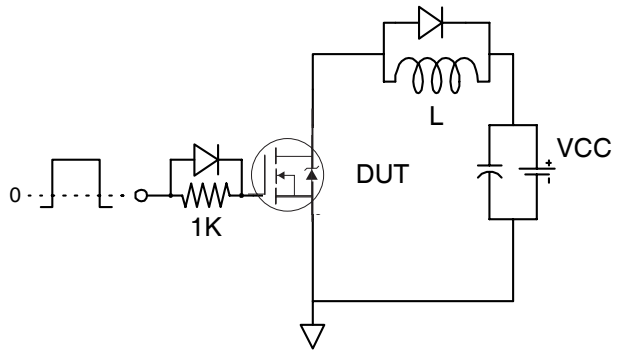

Fig 17. Gate Charge Test Circuit

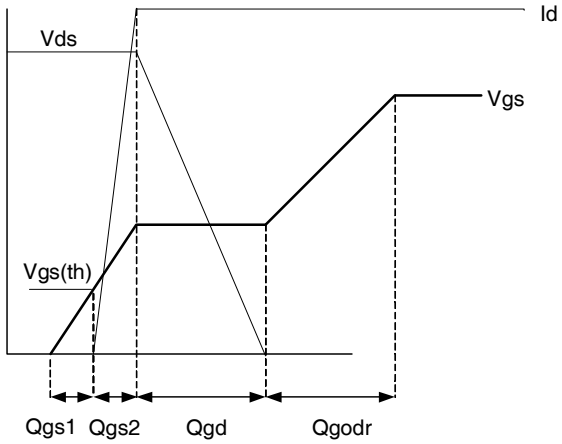

Fig 18. Gate Charge Waveform

PQFN 5x6 Outline "B" Package Details

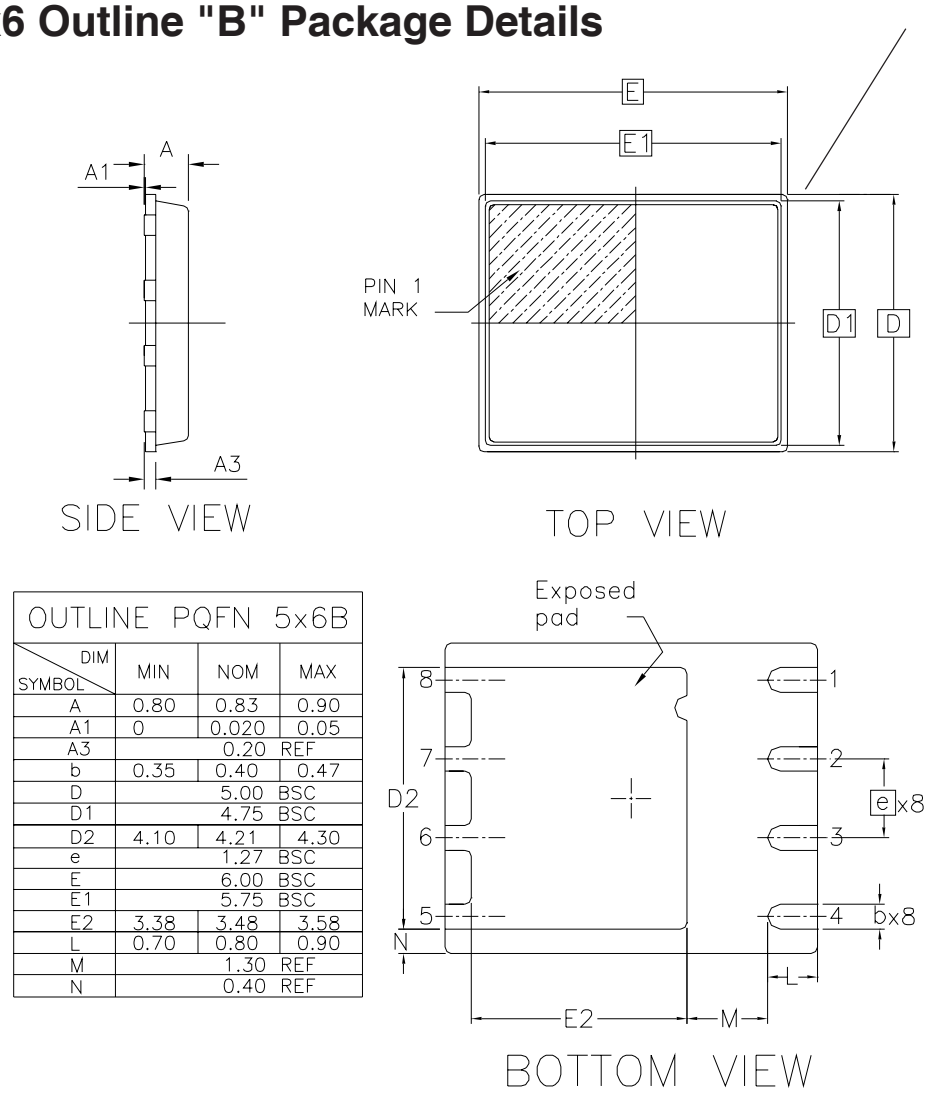

OUTLINE PQFN 5x6B			
DIM / SYMBOL	MIN	NOM	MAX
A	0.80	0.83	0.90
A1	0	0.020	0.05
A3		0.20 REF	
b	0.35	0.40	0.47
D		5.00 BSC	
D1		4.75 BSC	
D2	4.10	4.21	4.30
e		1.27 BSC	
E		6.00 BSC	
E1		5.75 BSC	
E2	3.38	3.48	3.58
L	0.70	0.80	0.90
M		1.30 REF	
N		0.40 REF	

For footprint and stencil design recommendations, please refer to application note AN-1154 at
http://www.irf.com/technical-info/appnotes/an-1154.pdf

PQFN 5x6 Outline "B" Part Marking

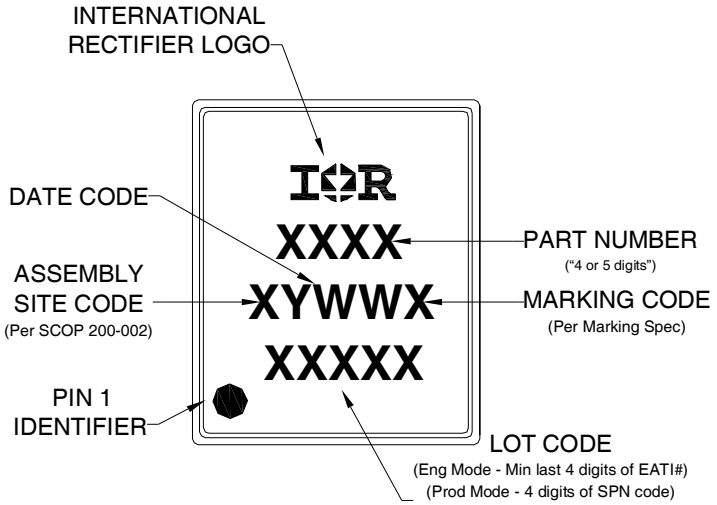

Note: For the most current drawing please refer to IR website at: http://www.irf.com/package/

PQFN Tape and Reel

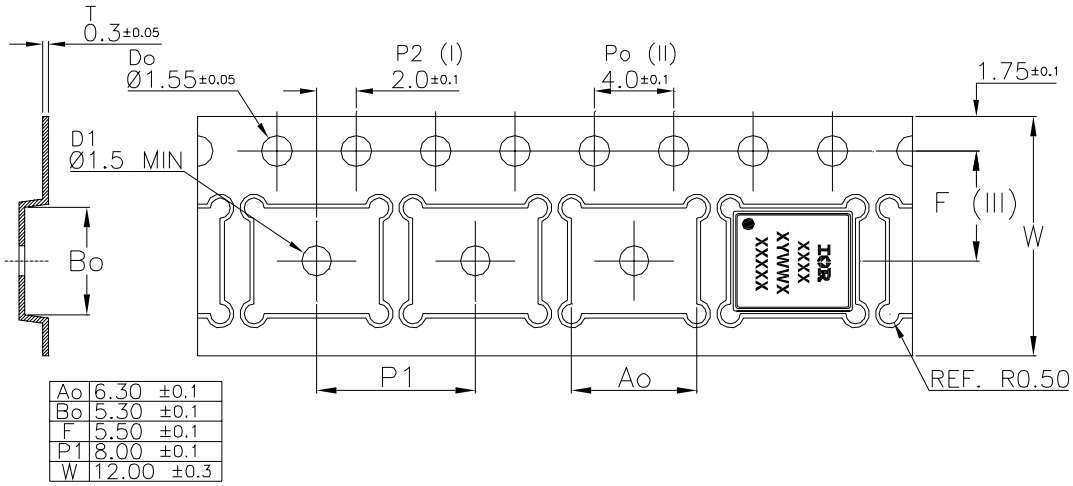

Note: For the most current drawing please refer to IR website at: http://www.irf.com/package/

Qualification information†

Qualification level	Industrial†† (per JEDEC JESD47F ††† guidelines)	
Moisture Sensitivity Level	PQFN 5mm x 6mm	MSL1 (per JEDEC J-STD-020D†††)
RoHS compliant	Yes	

† Qualification standards can be found at International Rectifier's web site http://www.irf.com/product-info/reliability

†† Higher qualification ratings may be available should the user have such requirements. Please contact your International Rectifier sales representative for further information: http://www.irf.com/whoto-call/salesrep/

††† Applicable version of JEDEC standard at the time of product release.

Notes:

① Repetitive rating; pulse width limited by max. junction temperature.
② Starting T_J = 25°C, L = 0.337mH, R_G = 25Ω, I_{AS} = 50A.
③ Pulse width ≤ 400µs; duty cycle ≤ 2%.
④ R_θ is measured at T_J of approximately 90°C.
⑤ When mounted on 1 inch square 2 oz copper pad on 1.5x1.5 in. board of FR-4 material.
⑥ Calculated continuous current based on maximum allowable junction temperature. Package is limited to 100A by production test capability

Data and specifications subject to change without notice.

International
IOR Rectifier

IR WORLD HEADQUARTERS: 233 Kansas St., El Segundo, California 90245, USA Tel: (310) 252-7105
TAC Fax: (310) 252-7903
Visit us at www.irf.com for sales contact information.9/2009