ALPHA & OMEGA SEMICONDUCTOR

AONS32311

30V N-Channel MOSFET

General Description

- Trench Power MOSFET technology
- Low $R_{DS(ON)}$
- Low Gate Charge
- High Current Capability
- RoHS and Halogen-Free Compliant

Applications

- Motor, Oring, Efuse
- High current battery charge/discharge

Product Summary

V_{DS}	30V
I_D (at V_{GS}=10V)	220A
$R_{DS(ON)}$ (at V_{GS}=10V)	< 1.35mΩ
$R_{DS(ON)}$ (at V_{GS}=4.5V)	< 1.9mΩ

100% UIS Tested
100% Rg Tested

Green Product

DFN5X6

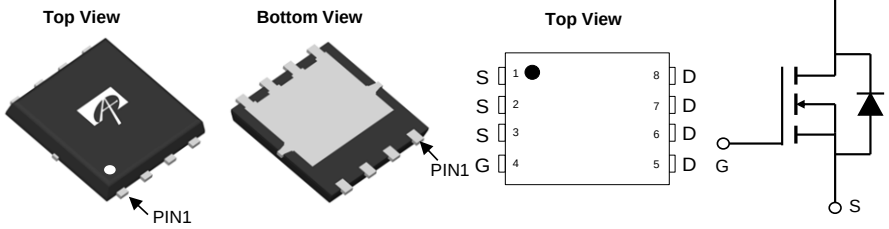

Orderable Part Number	Package Type	Form	Minimum Order Quantity
AONS32311	DFN 5x6	Tape & Reel	3000

Absolute Maximum Ratings T_A=25°C unless otherwise noted

Parameter		Symbol	Maximum	Units
Drain-Source Voltage		V_{DS}	30	V
Gate-Source Voltage		V_{GS}	±20	V
Continuous Drain Current [G]	T_C=25°C	I_D	220	A
	T_C=100°C		140	
Pulsed Drain Current [C] (≤10µs)		I_{DM}	880	
Continuous Drain Current	T_A=25°C	I_{DSM}	56	A
	T_A=70°C		45	
Avalanche Current [C]		I_{AS}	70	A
Avalanche energy	L=0.1mH [C]	E_{AS}	245	mJ
Power Dissipation [B]	T_C=25°C	P_D	119	W
	T_C=100°C		48	
Power Dissipation [A]	T_A=25°C	P_{DSM}	6.2	W
	T_A=70°C		4.0	
Junction and Storage Temperature Range		T_J, T_{STG}	-55 to 150	°C

Thermal Characteristics

Parameter		Symbol	Typ	Max	Units
Maximum Junction-to-Ambient [A]	t ≤ 10s	$R_{\theta JA}$	15	20	°C/W
Maximum Junction-to-Ambient [A D]	Steady-State		40	50	°C/W
Maximum Junction-to-Case	Steady-State	$R_{\theta JC}$	0.85	1.05	°C/W

Electrical Characteristics (T_J=25°C unless otherwise noted)

Symbol	Parameter	Conditions	Min	Typ	Max	Units
STATIC PARAMETERS						
BV_{DSS}	Drain-Source Breakdown Voltage	I_D=250µA, V_{GS}=0V	30			V
I_{DSS}	Zero Gate Voltage Drain Current	V_{DS}=30V, V_{GS}=0V			1	µA
		T_J=55°C			5	
I_{GSS}	Gate-Body leakage current	V_{DS}=0V, V_{GS}=±20V			±100	nA
$V_{GS(th)}$	Gate Threshold Voltage	V_{DS}=V_{GS}, I_D=250µA	1.3	1.8	2.3	V
$R_{DS(ON)}$	Static Drain-Source On-Resistance	V_{GS}=10V, I_D=20A		1.1	1.35	mΩ
		T_J=125°C		1.75	2.2	
		V_{GS}=4.5V, I_D=20A		1.5	1.9	mΩ
g_{FS}	Forward Transconductance	V_{DS}=5V, I_D=20A		143		S
V_{SD}	Diode Forward Voltage	I_S=1A, V_{GS}=0V		0.66	1	V
I_S	Maximum Body-Diode Continuous Current				140	A
DYNAMIC PARAMETERS						
C_{iss}	Input Capacitance	V_{GS}=0V, V_{DS}=15V, f=1MHz		6060		pF
C_{oss}	Output Capacitance			710		pF
C_{rss}	Reverse Transfer Capacitance			550		pF
R_g	Gate resistance	f=1MHz	0.4	0.8	1.2	Ω
SWITCHING PARAMETERS						
Q_g(10V)	Total Gate Charge	V_{GS}=10V, V_{DS}=15V, I_D=20A		110	150	nC
Q_g(4.5V)	Total Gate Charge			54		nC
Q_{gs}	Gate Source Charge			16.5		nC
Q_{gd}	Gate Drain Charge			25		nC
$t_{D(on)}$	Turn-On DelayTime	V_{GS}=10V, V_{DS}=15V, R_L=0.75Ω, R_{GEN}=3Ω		13		ns
t_r	Turn-On Rise Time			11		ns
$t_{D(off)}$	Turn-Off DelayTime			78		ns
t_f	Turn-Off Fall Time			18		ns
t_{rr}	Body Diode Reverse Recovery Time	I_F=20A, di/dt=500A/µs		16		ns
Q_{rr}	Body Diode Reverse Recovery Charge	I_F=20A, di/dt=500A/µs		40		nC

A. The value of $R_{\theta JA}$ is measured with the device mounted on 1in^2 FR-4 board with 2oz. Copper, in a still air environment with T_A =25° C. The Power dissipation P_{DSM} is based on $R_{\theta JA}$ t≤ 10s and the maximum allowed junction temperature of 150° C. The value in any given application depends on the user's specific board design.
B. The power dissipation P_D is based on $T_{J(MAX)}$=150° C, using junction-to-case thermal resistance, and is more useful in setting the upper dissipation limit for cases where additional heatsinking is used.
C. Single pulse width limited by junction temperature $T_{J(MAX)}$=150° C.
D. The $R_{\theta JA}$ is the sum of the thermal impedance from junction to case $R_{\theta JC}$ and case to ambient.
E. The static characteristics in Figures 1 to 6 are obtained using <300 µs pulses, duty cycle 0.5% max.
F. These curves are based on the junction-to-case thermal impedance which is measured with the device mounted to a large heatsin k, assuming a maximum junction temperature of $T_{J(MAX)}$=150° C. The SOA curve provides a single pulse rating.
G. The maximum current rating is package limited.
H. These tests are performed with the device mounted on 1 in^2 FR-4 board with 2oz. Copper, in a still air environment with T_A=25° C.

APPLICATIONS OR USE AS CRITICAL COMPONENTS IN LIFE SUPPORT DEVICES OR SYSTEMS ARE NOT AUTHORIZED. AOS DOES NOT ASSUME ANY LIABILITY ARISING OUT OF SUCH APPLICATIONS OR USES OF ITS PRODUCTS. AOS RESERVES THE RIGHT TO IMPROVE PRODUCT DESIGN,FUNCTIONS AND RELIABILITY WITHOUT NOTICE.

TYPICAL ELECTRICAL AND THERMAL CHARACTERISTICS

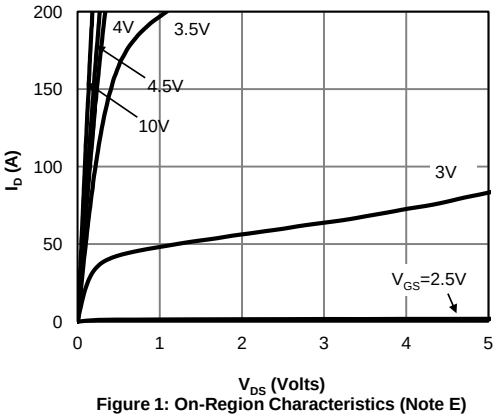

Figure 1: On-Region Characteristics (Note E)

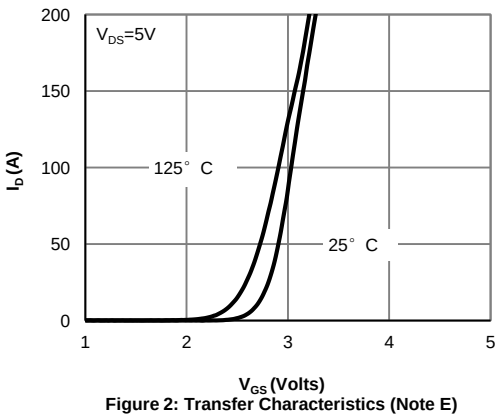

Figure 2: Transfer Characteristics (Note E)

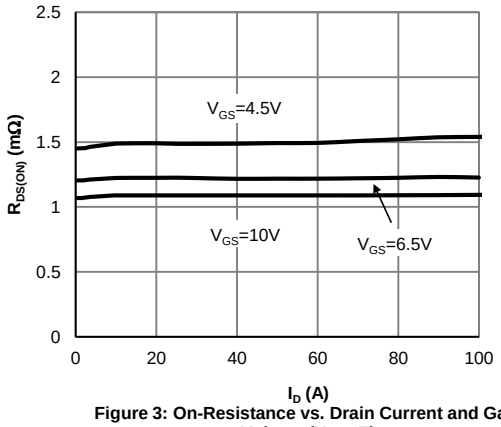

Figure 3: On-Resistance vs. Drain Current and Gate Voltage (Note E)

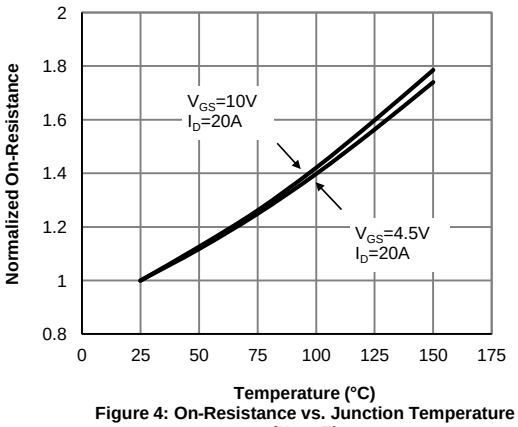

Figure 4: On-Resistance vs. Junction Temperature (Note E)

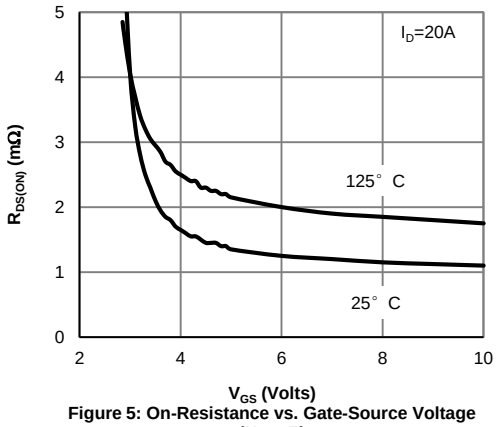

Figure 5: On-Resistance vs. Gate-Source Voltage (Note E)

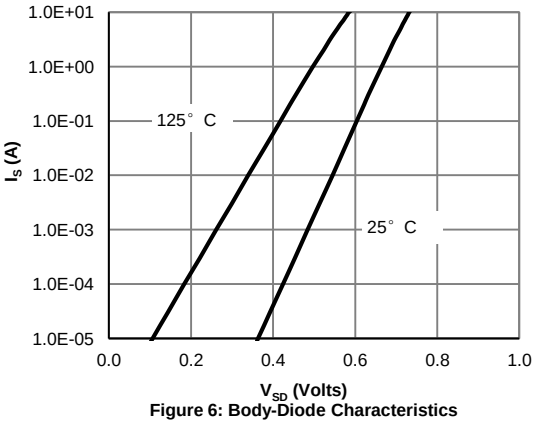

Figure 6: Body-Diode Characteristics (Note E)

TYPICAL ELECTRICAL AND THERMAL CHARACTERISTICS

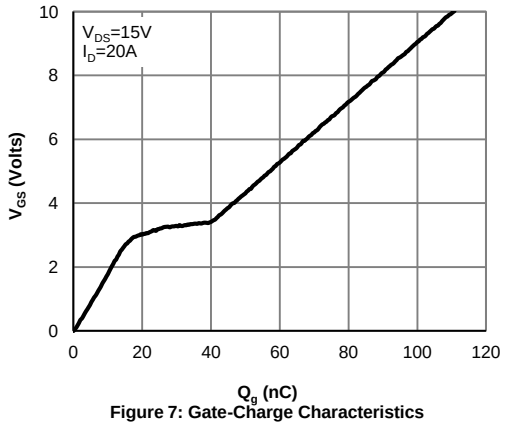

Figure 7: Gate-Charge Characteristics

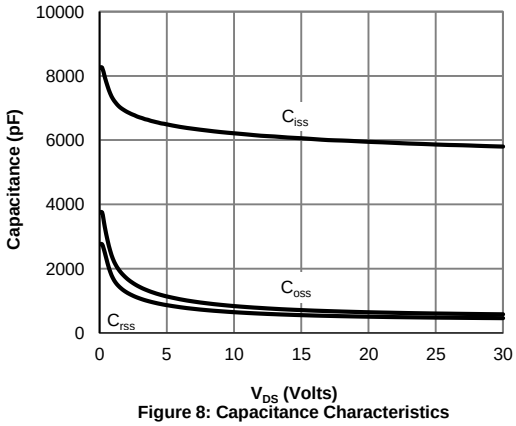

Figure 8: Capacitance Characteristics

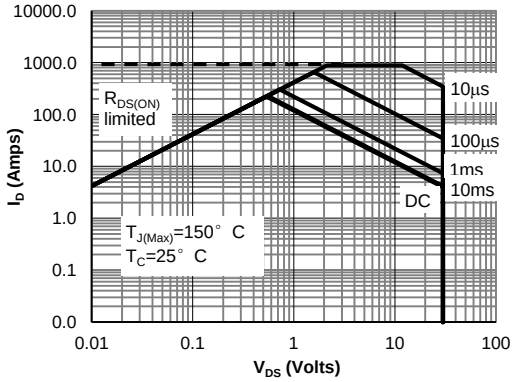

Figure 9: Maximum Forward Biased Safe Operating Area (Note F)

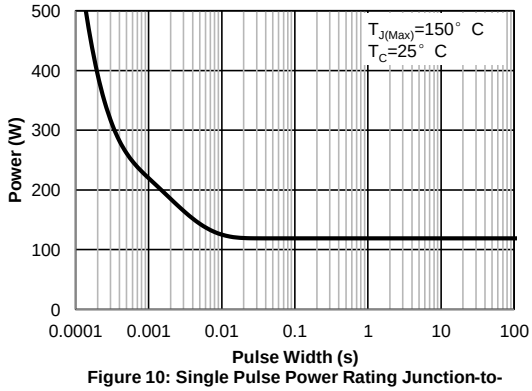

Figure 10: Single Pulse Power Rating Junction-to-Case (Note F)

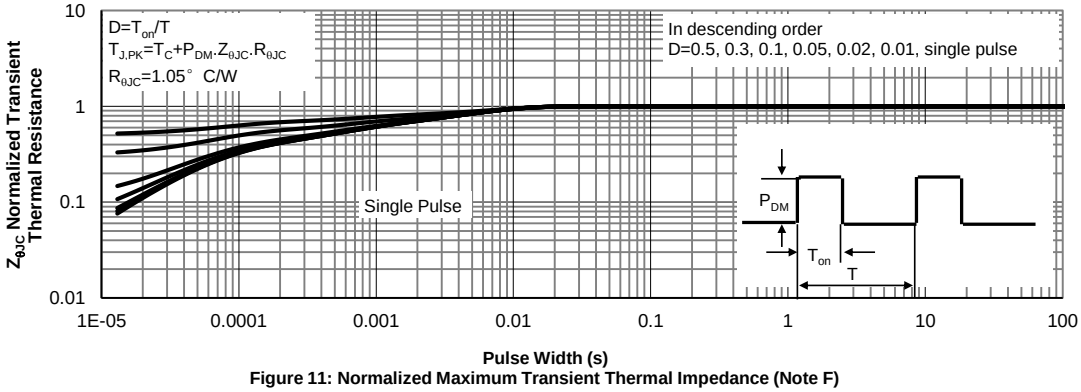

Figure 11: Normalized Maximum Transient Thermal Impedance (Note F)

TYPICAL ELECTRICAL AND THERMAL CHARACTERISTICS

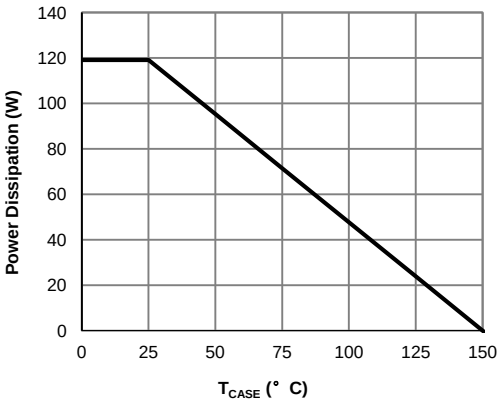

Figure 12: Power De-rating (Note F)

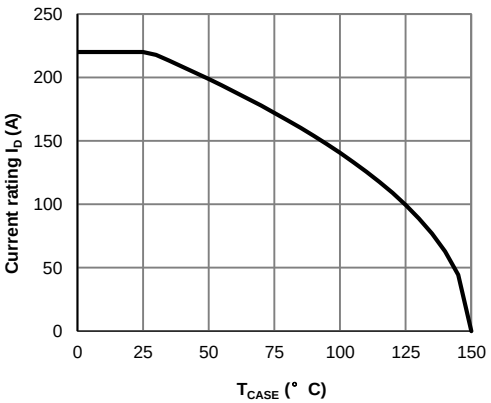

Figure 13: Current De-rating (Note F)

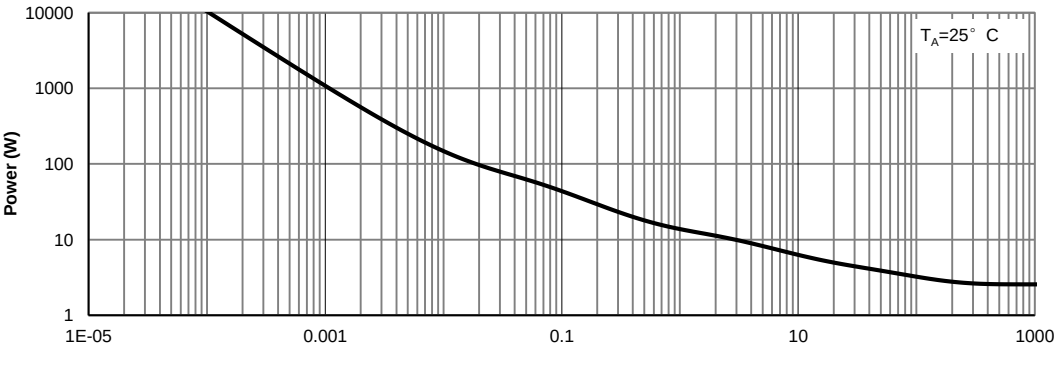

Figure 14: Single Pulse Power Rating Junction-to-Ambient (Note H)

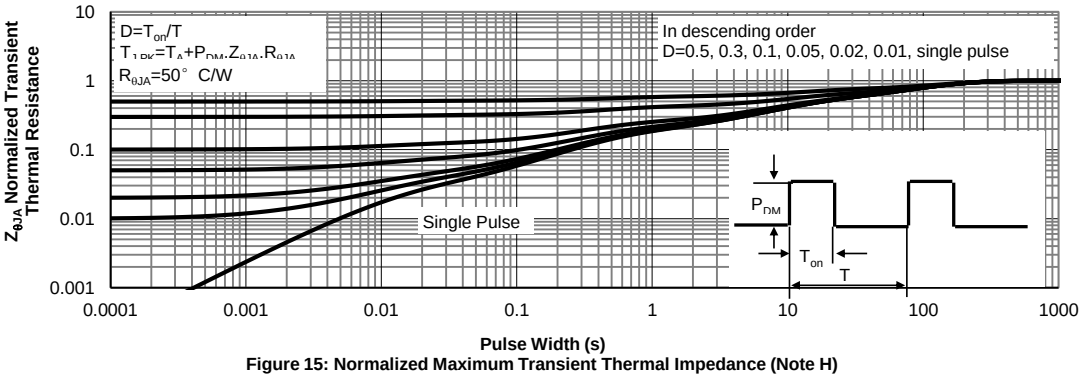

Figure 15: Normalized Maximum Transient Thermal Impedance (Note H)

Figure A: Gate Charge Test Circuit & Waveforms

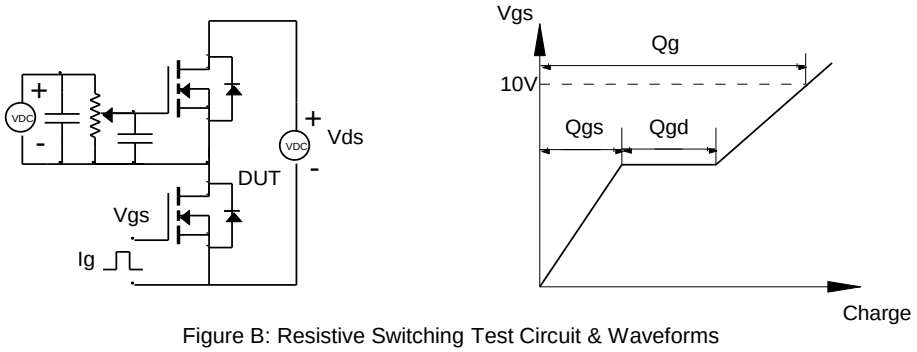

Figure B: Resistive Switching Test Circuit & Waveforms

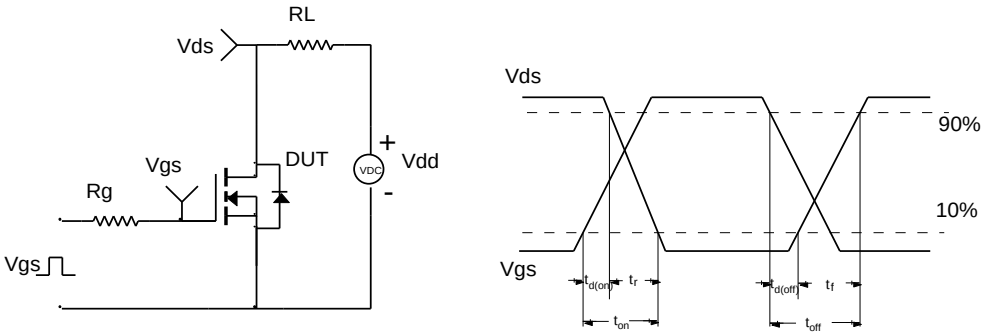

Figure C: Unclamped Inductive Switching (UIS) Test Circuit & Waveforms

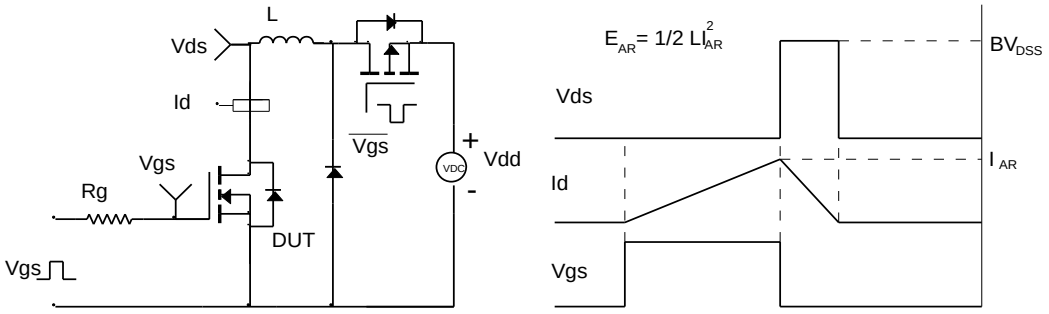
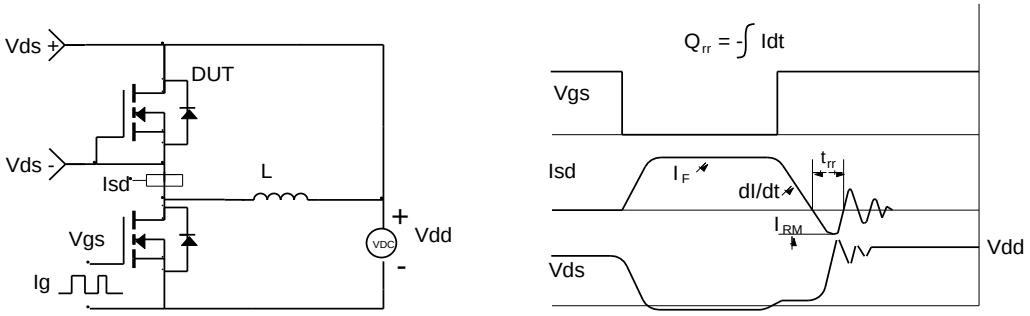
Figure D: Diode Recovery Test Circuit & Waveforms