68mΩ, 600V, Super Junction N-Channel Power MOSFET SRC60R068BS

General Description

The Sanrise SRC60R068BS is a high voltage power MOSFET, fabricated using advanced super junction technology. The resulting device has extremely low on resistance, low gate charge and fast switching time, making it especially suitable for applications which require superior power density and outstanding efficiency.

The SRC60R068BS break down voltage is 600V and it has a high rugged avalanche characteristics. The SRC60R068BS is available in TO-247, TO-263-2, TO-220C and TO-220F packages.

Features

- Ultra Low $R_{DS(ON)}$ = 68mΩ @ V_{GS} = 10V.
- Ultra Low Gate Charge, Qg=110nC typ.
- Fast switching capability
- Robust design with better EAS performance
- EMI Improved
- Non-automotive Qualified
- Ultra-fast body diode

Application

- Telecom Power
- EV Charger
- High Power Application

Symbol

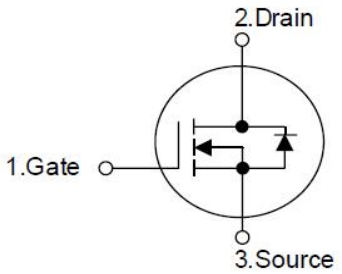

Figure 1 Symbol of SRC60R068BS

Package Type

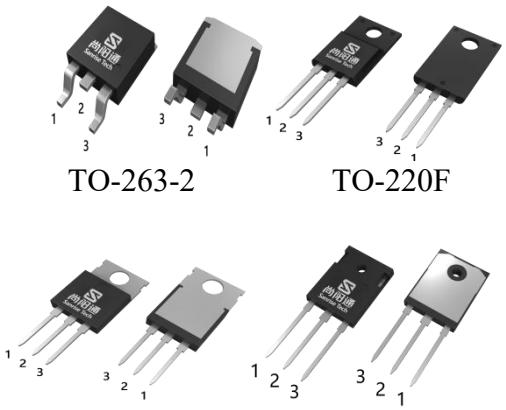

Figure 2 Package Types of SRC60R068BS

Ordering Information

SRC60R068BS□□–□

Circuit Type

Package
T: TO-247
S2: TO-263-2
TF: TO-220F
TC: TO-220C

E: Lead Free
G: Green

Blank: Tube
TR: Tape & Reel

Package	Part Number		Marking ID		Packing Type
	Lead Free	Green	Lead Free	Green	
TO-247	SRC60R068BST-E	SRC60R068BST-G	SRC60R068BSTE	SRC60R068BSTG	Tube
TO-263-2	SRC60R068BSS2TR-E	SRC60R068BSS2TR-G	SRC60R068BSS2E	SRC60R068BSS2G	Tape & Reel
TO-220F	SRC60R068BSTF-E	SRC60R068BSTF-G	SRC60R068BSTFE	SRC60R068BSTFG	Tube
TO-220C	SRC60R068BSTC-E	SRC60R068BSTC-G	SRC60R068BSTCE	SRC60R068BSTCG	Tube

Absolute Maximum Ratings[Note1]

Parameter		Symbol	Rating	Unit
Drain-Source Voltage		V_{DSS}	600	V
Gate-Source Voltage		V_{GSS}	±30	V
Power Dissipation(TO-220C,TO-263-2,TO-247,Tc=25℃)		P_{tot}	357.1	W
Power Dissipation(TO-220F,Tc=25℃)		P_{tot}	35.7	W
Continuous Drain Current	T_C=25ºC	I_D	48	A
	T_C=100ºC		30.3	
	T_C=125ºC		21.5	
Pulsed Drain Current (Note 2)		I_{DM}	144	A
Avalanche Energy, Single Pulse (Note 3)		E_{AS}	125	mJ
Avalanche Energy, Repetitive (Note 2)		E_{AR}	0.6	mJ
Avalanche Current, Repetitive (Note 2)		I_{AR}	5.0	A
Continuous Diode Forward Current		I_S	48	A
Diode Pulse Current		$I_{S.PULSE}$	144	A
MOSFET dv/dt Ruggedness, V_{DS}<=480V		dv/dt	80	V/ns
Reverse Diode dv/dt, V_{DS}<=480V, I_{SD}<=I_D		dv/dt	50	V/ns
Maximum diode commutation speed(Note 4)		diF/dt	1300	A/us
ESD		HBM	>1000	V
Operating Junction Temperature		T_J	150	ºC
Storage Temperature		T_{STG}	-55 to 150	ºC
Lead Temperature (Soldering, 10 sec)		T_{LEAD}	260	ºC

Note:
1. Absolute maximum ratings are those values beyond which the device could be permanently damaged. Absolute maximum ratings are stress ratings only and functional device operation is not implied.
2. Repetitive Rating: Pulse width limited by maximum junction temperature
3. I_{AS} = 5.0A, V_{DD} = 60V, R_G = 25Ω, Starting T_J = 25°C
4. VDS=0...400V, ISD<=30A, Tj=25° C

Thermal characteristics

Parameter		Symbol	Min	Typ	Max	Unit
Thermal resistance, Junction-to-Case	TO-220F	R_{thJC}			3.5	ºC /W
	TO-220C				0.35	
	TO-247				0.35	
	TO-263				0.35	
Thermal resistance, Junction-to-Ambient	TO-220F	R_{thJA}			70	ºC /W
	TO-220C				58	
	TO-247				58	
	TO-263				58	

Electrical Characteristics

T_J = 25℃, unless otherwise specified.

Parameter		Symbol	Test Conditions	Min	Typ	Max	Unit
Statistic Characteristics							
Drain-Source Breakdown Voltage		BV_{DSS}	V_{GS}=0V, I_D=250uA	600			V
Zero Gate Voltage Drain Current		I_{DSS}	V_{DS}=600V, V_{GS}=0V			10	uA
Gate-Body Leakage Current	Forward	I_{GSSF}	V_{GS}=30V, V_{DS}=0V			100	nA
	Reverse	I_{GSSR}	V_{GS}=-30V, V_{DS}=0V			-100	
Gate Threshold Voltage		$V_{GS(TH)}$	V_{DS}=V_{GS}, I_D=1.0mA	3.0	4.0	5.0	V
Static Drain-Source On-Resistance		$R_{DS(ON)}$	V_{GS}=10V, I_D=24A		57	68	mΩ
Gate Resistance		R_G	f=1MHz, Open Drain		1.0		Ω
Dynamic Characteristics							
Input Capacitance		C_{ISS}	V_{DS}=50V, V_{GS}=0V, f=1MHz		4.3		nF
Output Capacitance		C_{OSS}			171		pF
Reverse Transfer Capacitance		C_{RSS}			2.8		pF
Effective output capacitance, energy related NOTE5		$C_{O(er)}$	V_{GS}=0V, V_{DS}=0…400V		94		pF
Effective output capacitance, time related NOTE6		$C_{O(tr)}$			550		
Turn-on Delay Time		$t_{d(on)}$	V_{DD}=400V, I_D=24A R_G=3.3Ω, V_{GS}=10V		16		ns
Rise Time		t_r			6.0		
Turn-off Delay Time		$t_{d(off)}$			98		
Fall Time		t_f			4.0		
Gate Charge Characteristics							
Gate to Source Charge		Q_{gs}	V_{DD}=480V, I_D=24A V_{GS}=0 to 10V		28.1		nC
Gate to Drain Charge		Q_{gd}			56.0		
Gate Charge Total		Q_g			110		
Gate Plateau Voltage		$V_{plateau}$			6.5		V
Reverse Diode Characteristics							
Drain-Source Diode Forward Voltage		V_{SD}	V_{GS}=0V, I_{SD}=24A		0.9	1.1	V
Reverse Recovery Time		t_{rr}	V_R=400V, I_F=24A dI_F/dt=100A/us		141		ns
Reverse Recovery Charge		Q_{rr}			0.83		uC
Peak Reverse Recovery Current		I_{rrm}			11.8		A

Note:

5. $C_{O(er)}$ is a fixed capacitance that gives the same stored energy as C_{OSS} while V_{DS} is rising from 0 to 480V

6. $C_{O(tr)}$ is a fixed capacitance that gives the same charging time as C_{OSS} while V_{DS} is rising from 0 to 480 V

Typical Performance Characteristics

Figure 3: Power Dissipation	Figure 4: Max. Transient Thermal Impedance
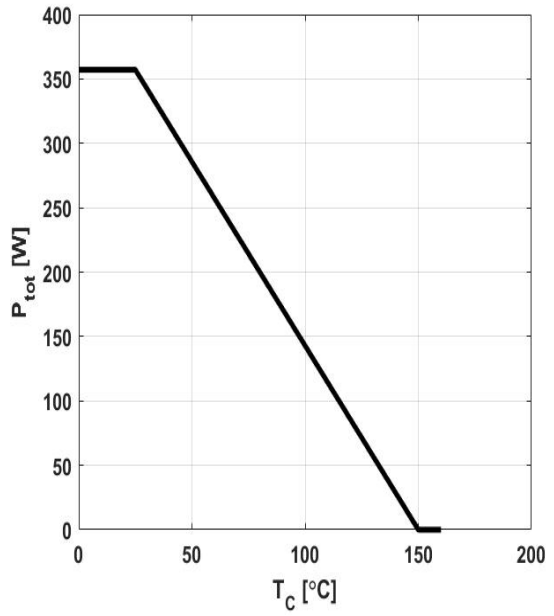	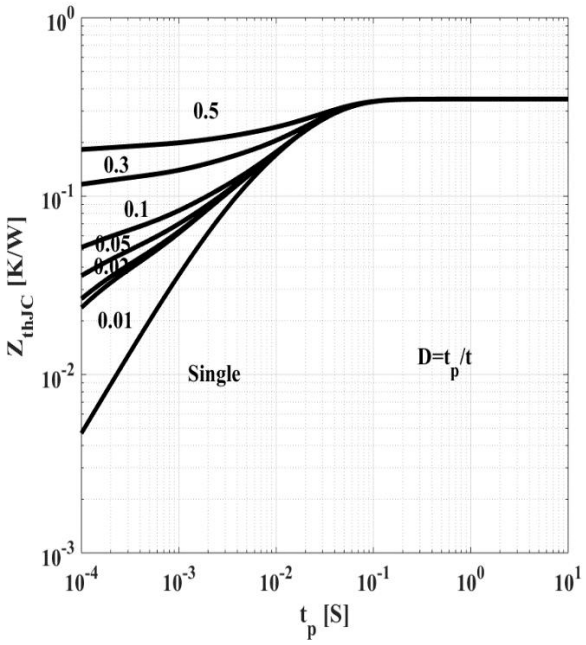
P_{tot} = f(T_c); TO-247	Z($_{thJC}$) = f(t_p); parameter: D = t_p/T;TO-247

Figure 5: Safe Operating Area	Figure 6: Safe Operating Area
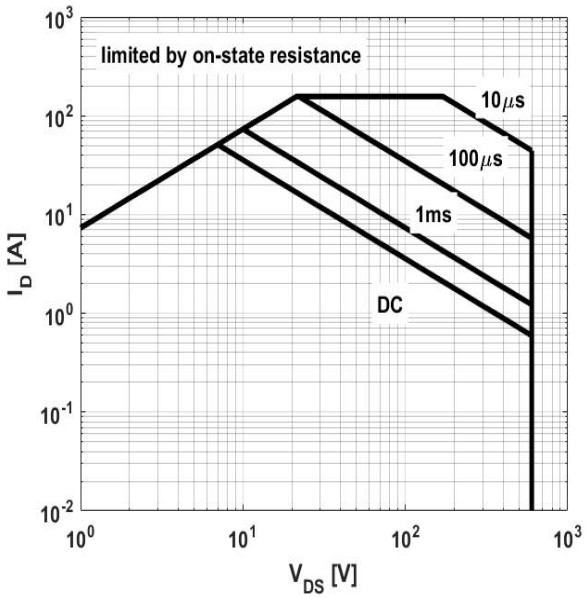	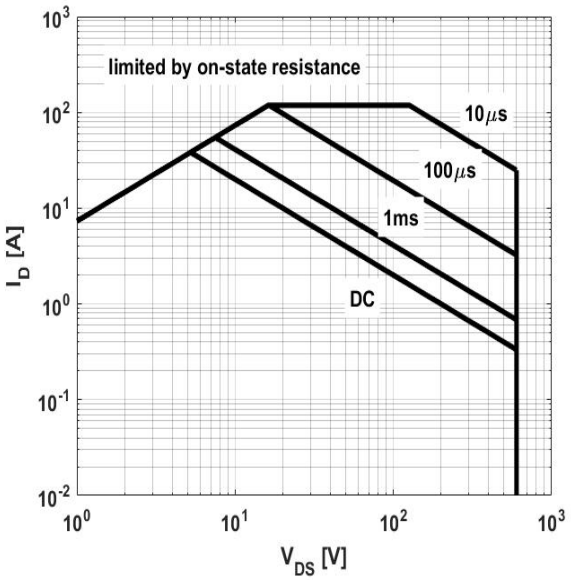
I_D = f(V_{DS}); T_c= 25ºC; V_{GS}>7V; parameter t_p	I_D = f(V_{DS}); T_c= 80ºC; V_{GS}>7V; parameter t_p

Figure 7: Typ. Output Characteristics

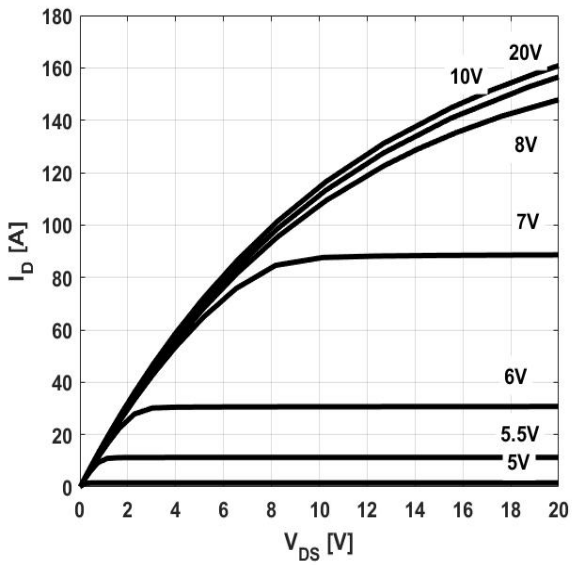

$I_D = f(V_{DS})$; Tj= 25ºC; parameter: V_{GS}

Figure 8: Typ. Output Characteristics

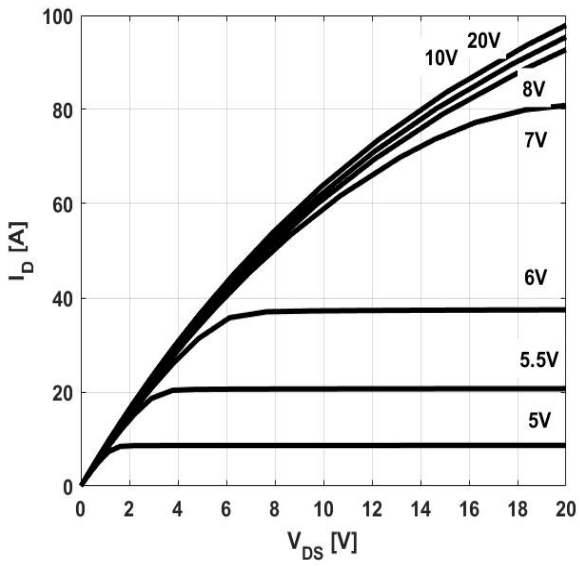

$I_D = f(V_{DS})$; T_j= 125ºC; parameter: V_{GS}

Figure 9: Typ. Drain-Source On-State Resistance

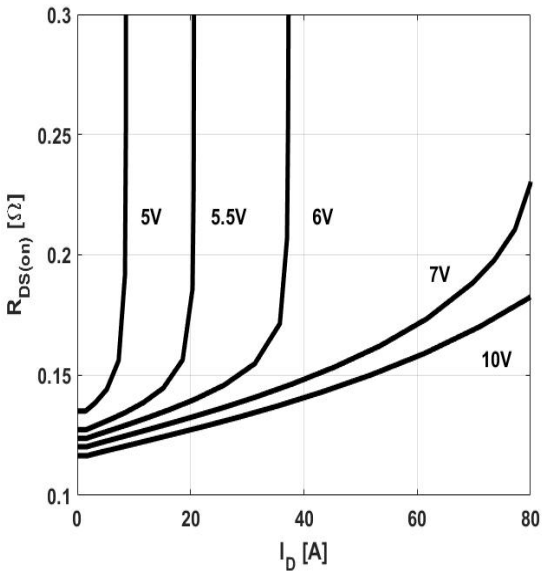

$R_{DS(ON)} = f(I_D)$; T_j=125ºC; parameter: V_{GS}

Figure 10: Typ. Drain-Source On-State Resistance

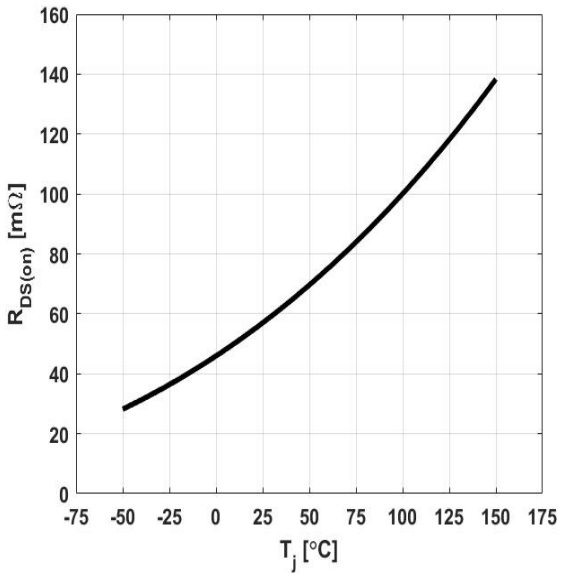

$R_{DS(ON)} = f(T_j)$; I_D=24A; V_{GS}=10V

Figure 11: Typ. Transfer Characteristics

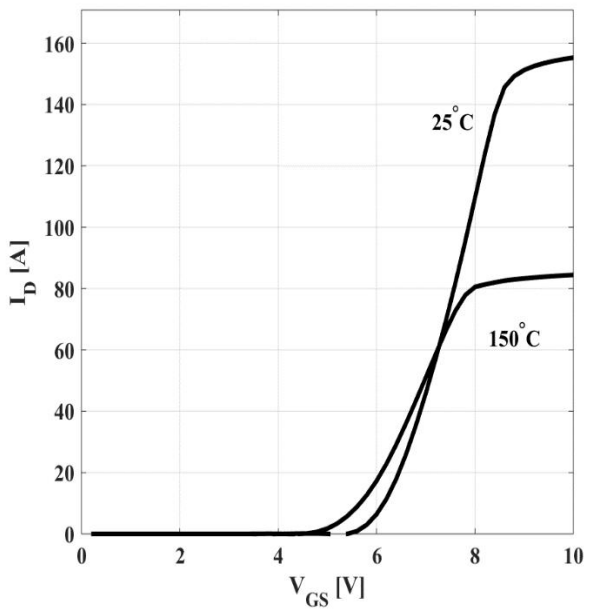

$I_D = f(V_{GS})$; $V_{DS} = 20V$

Figure 12: Typ. Gate Charge

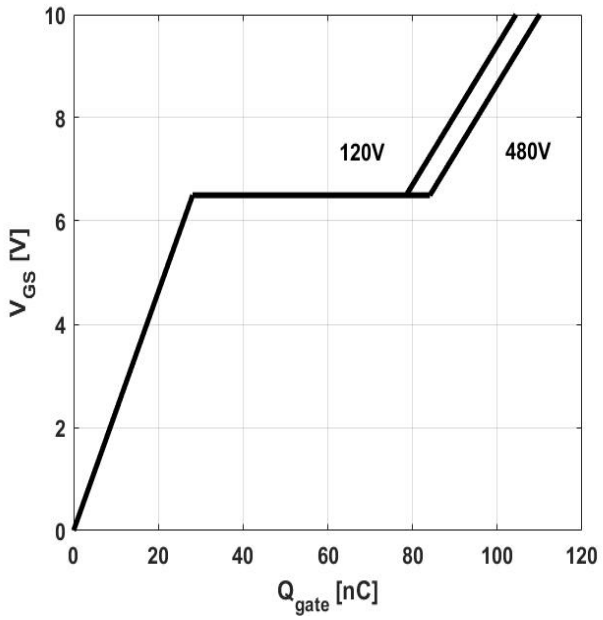

$V_{GS} = f(Q_{gate})$, $I_D = 24A$ pulsed

Figure 13: Drain-Source Breakdown Voltage

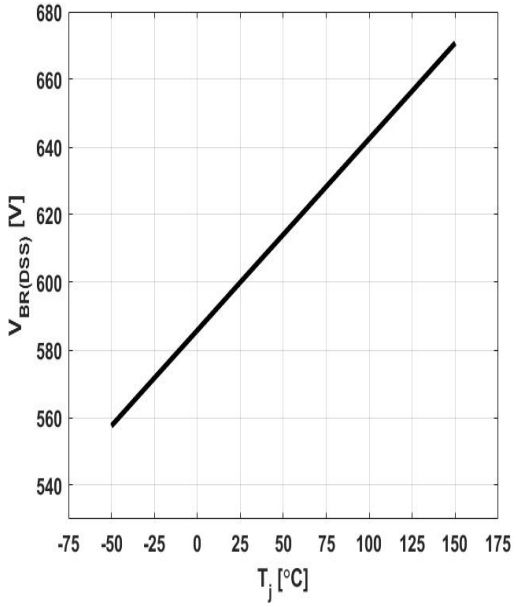

$V_{BR(DSS)} = f(T_j)$; $I_D = 1mA$

Figure 14: Forward Characteristics of Reverse Diode

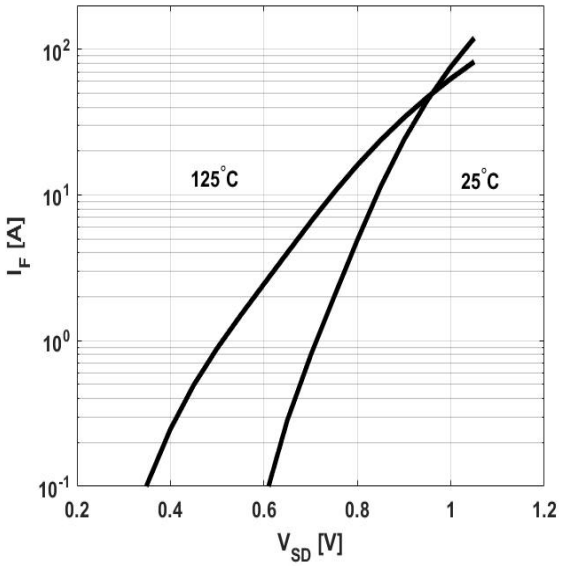

$I_F = f(V_{SD})$; parameter: T_j

Figure 15: Avalanche Energy

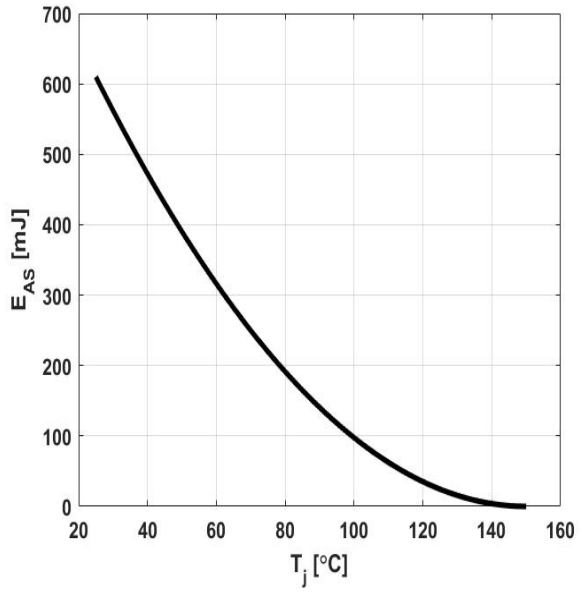

$E_{AS}=f(T_j)$; $I_D=4.8A$; $V_{DD}=60V$

Figure 16: Typ. Capacitances

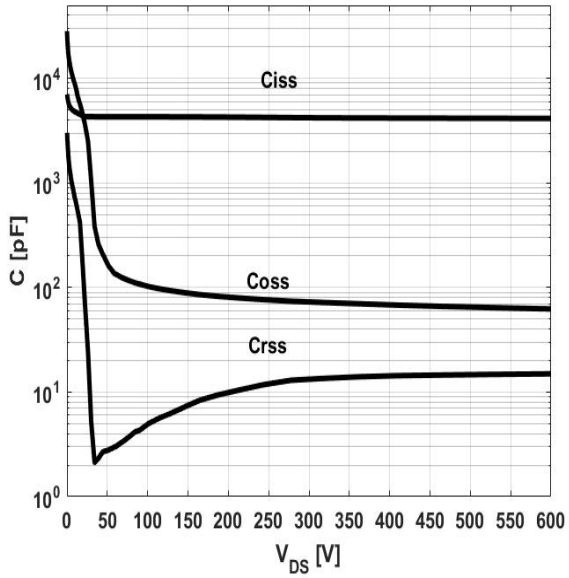

$C=f(V_{DS})$; $V_{GS}=0$; f=1MHz

Figure 17: C_{OSS} Stored Energy

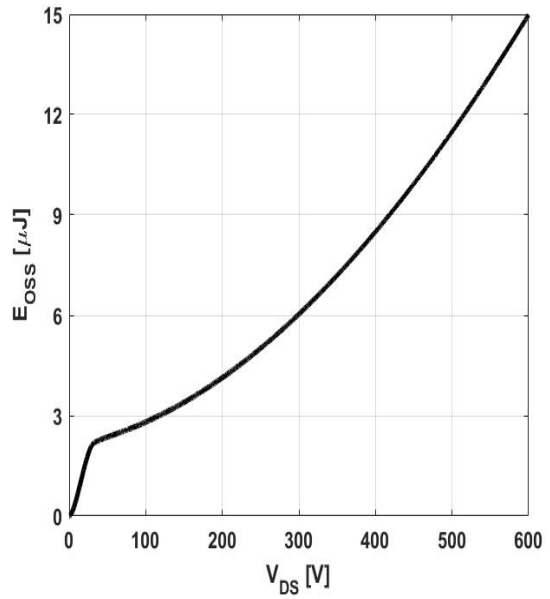

$E_{OSS}=f(V_{DS})$

Test Circuits

1. Gate Charge Test Circuit & Waveform

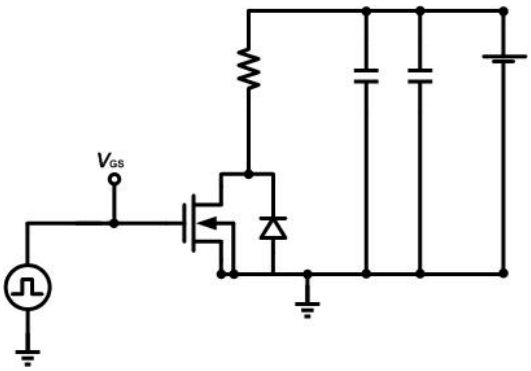

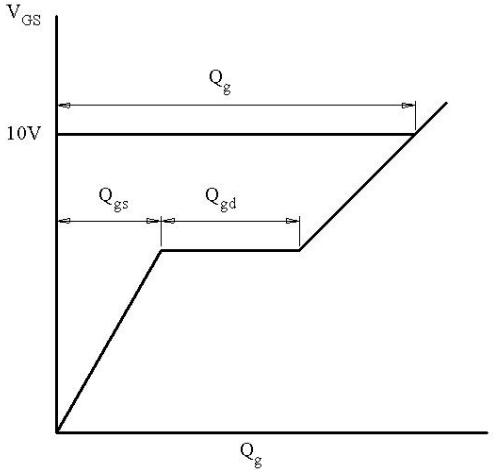

2. Switch Time Test Circuit

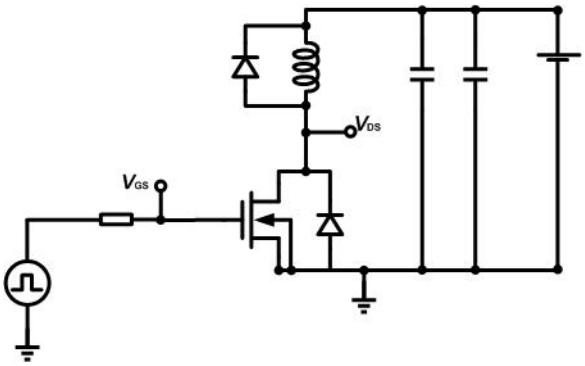

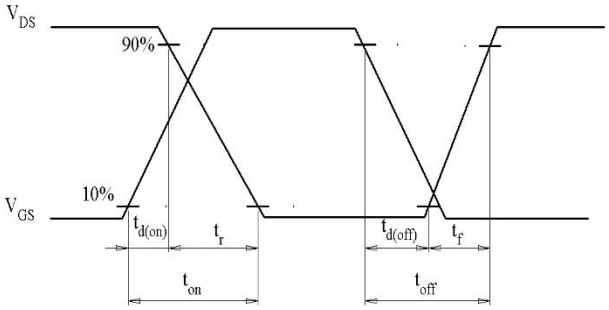

3. Unclaimed Inductive Switching Test Circuit & Waveforms

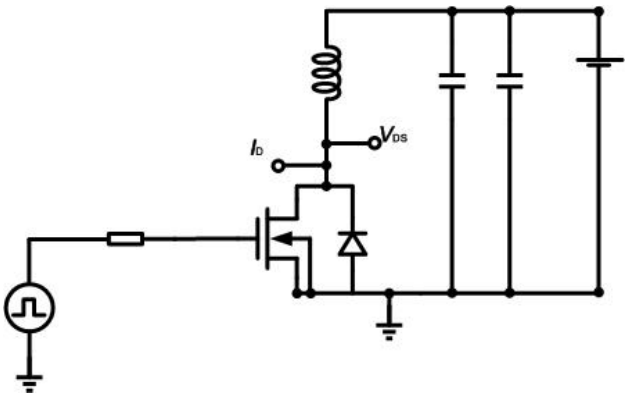

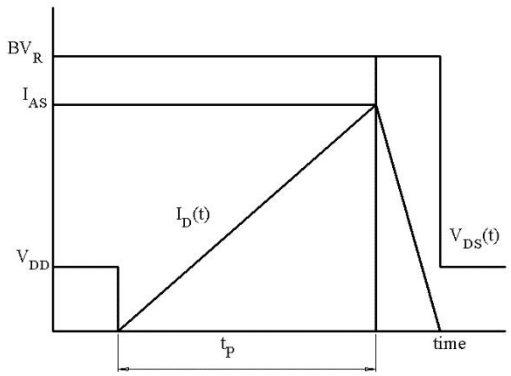

4. Test Circuit and Waveform for Diode Characteristics

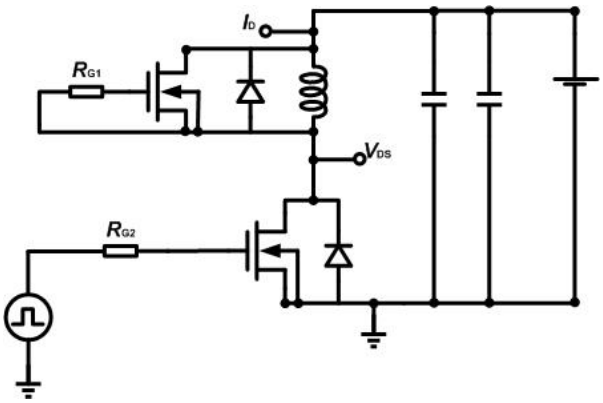

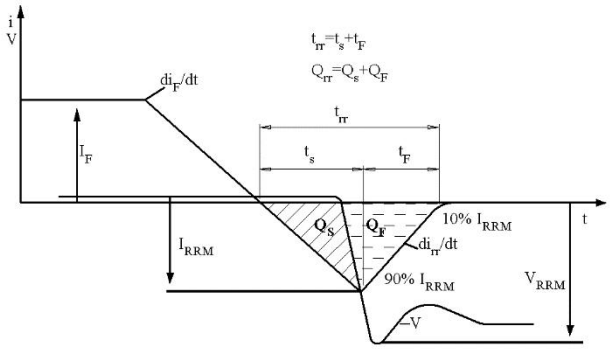

Mechanical Dimensions

TO-263-2（Package 1） **Unit: mm**

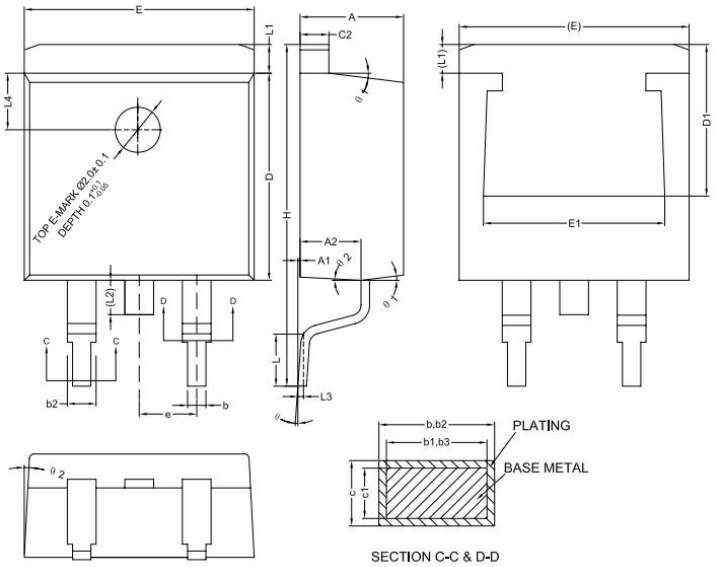

Symbol	Dimensions(mm)		
	Min.	Typ.	Max.
A	4.40	4.57	4.70
A1	0.00	0.10	0.25
A2	2.59	2.69	2.79
b	0.77	-	0.90
b1	0.76	0.81	0.86
b2	1.23	-	1.36
b3	1.22	1.27	1.32
c	0.34	-	0.47
c1	0.33	0.38	0.43
c2	1.22	-	1.32
D	9.05	9.15	9.25
D1	6.60	-	-
E	10.06	10.16	10.26
E1	7.80	-	8.20
e	2.54(BSC)		
H	14.70	15.10	15.50
L	2.00	2.30	2.60
L1	1.17	1.27	1.40
L2	-	-	1.75
L3	0.25BSC		
L4	2.00REF		
θ	0°	-	8°
Θ1	5°	7°	9°
Θ2	1°	3°	5°

Mechanical Dimensions

TO-263-2 （Package 2） **Unit: mm**

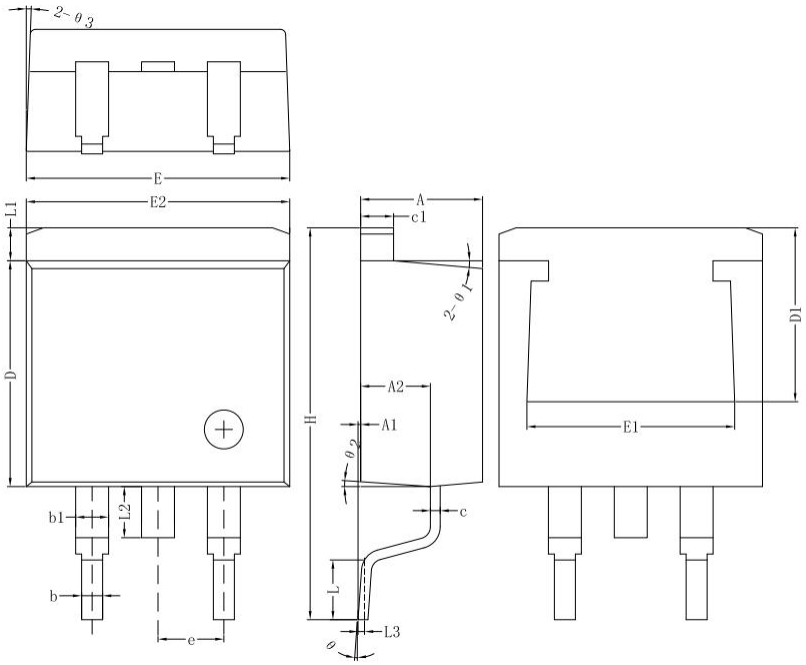

Symbol	Dimensions(mm)		
	Min.	Typ.	Max.
A	4.55	4.70	4.85
A1	0.00	0.10	0.25
A2	2.59	2.69	2.89
b	0.71	0.81	0.96
b1	-	1.27	-
c	0.36	0.38	0.61
c1	1.17	1.27	1.37
D	8.55	8.70	8.85
D1	-	7.2	-
E	10.01	10.16	10.31
E1	-	7.80	-
E2	9.98	10.08	10.18
e	-	2.54	-
H	14.70	15.10	15.50
L	2.00	2.30	2.70
L1	1.17	1.27	1.40
L2	-	-	2.20
L3	-	0.25BSC	-
θ	0°	-	8°
θ1		5°	
θ2		4°	
θ3		4°	

Mechanical Dimensions

TO-263-2 （Package 3） **Unit: mm**

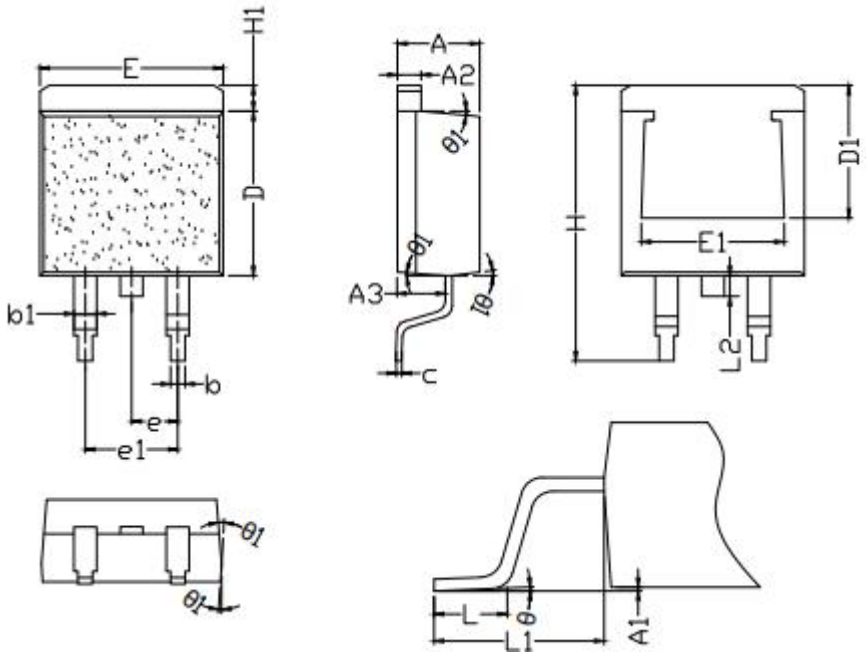

Symbol	Dimensions(mm)		
	Min.	Typ.	Max.
A	4.42	4.52	4.62
A1	0.00	0.10	0.25
A2	1.24	1.27	1.32
A3	2.50	2.60	2.70
b	0.77	0.81	0.84
b1	1.23	1.28	1.41
c	0.33	0.38	0.43
D	8.80	8.95	9.10
D1	7.2REF		
E	9.92	10.07	10.22
E1	7.85REF		
e	2.50	2.54	2.58
e1	5.08REF		
H	14.80	15.10	15.30
H1	1.12	1.28	1.42
L	2.10	2.23	2.36
L1	4.55	4.75	4.95
L2	1.10	1.30	1.50
θ	0°	2°	5°
θ1	3°	-	5°

Mechanical Dimensions

TO-220F（Package 1） **Unit: mm**

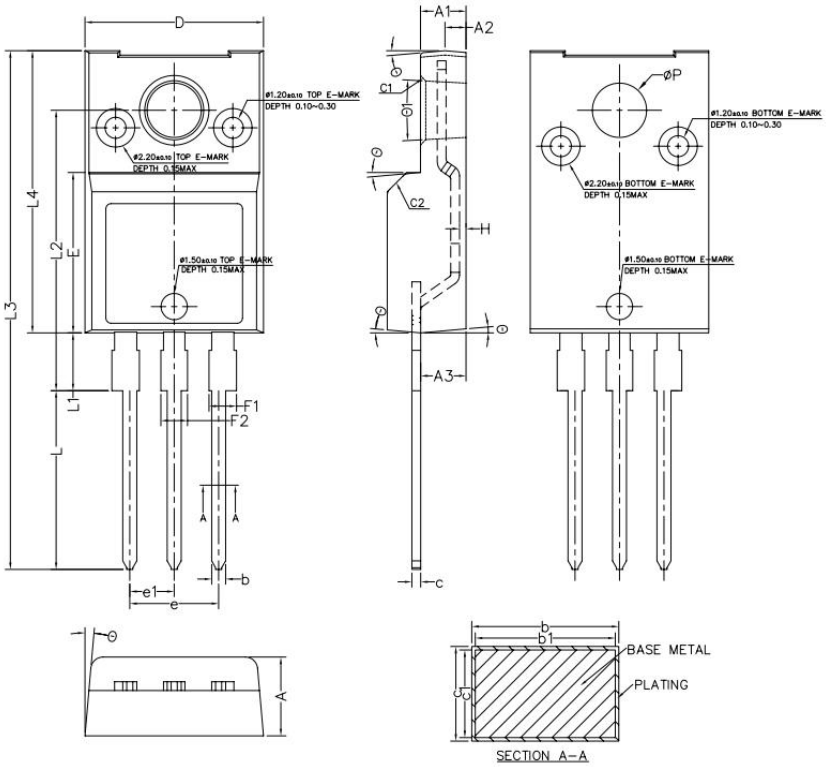

Symbol	Dimensions(mm)		
	Min.	Typ.	Max.
A	4.40	4.50	4.60
A1	2.50	2.60	2.70
A2	1.10	1.20	1.30
A3	2.49	2.59	2.69
b	0.76	-	0.89
b1	0.75	0.80	0.85
c	0.46	-	0.59
c1	0.45	0.50	0.55
C1	0.20	0.30	0.40
C2	1.00	1.10	1.20
D	10.10	10.20	10.30
E	9.05	9.15	9.25
e	4.98	5.08	5.18
e1	2.44	2.54	2.64
F1	1.22	-	1.60
F2	1.17	-	1.55
H	0.32	0.37	0.42
L	10.00	10.20	10.40
L1	3.15	3.30	3.45
L2	15.85	16.00	16.15
L3	29.30	29.60	29.90
L4	16.00	16.10	16.20
P	3.00	3.10	3.20
θ	3°	5°	7°
θ1	4°	6°	8°

Mechanical Dimensions

TO-220F（Package 2） **Unit: mm**

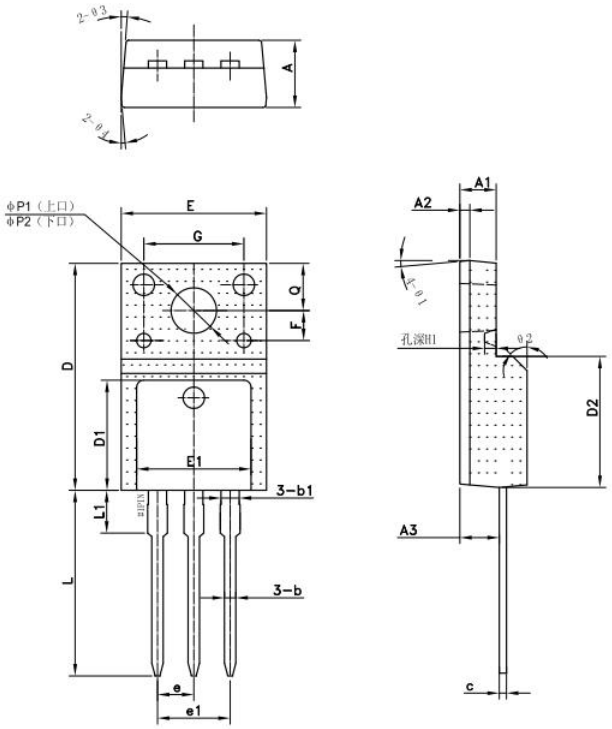

Symbol	Dimensions(mm)		
	Min.	Typ.	Max.
A	4.50	4.70	4.90
A1	2.34	2.54	2.70
A2	-	0.70	-
A3	2.56	2.76	2.96
b	0.70	0.80	0.95
b1	-	1.28	-
c	0.45	0.50	0.65
D	15.67	15.87	16.07
D1	-	7.70	-
D2		9.12	
E	9.96	10.16	10.36
E1	-	8.00	-
e		2.54	
e1		5.08	
F		2.1	
G		7	
H1	-	0.81	-
L	12.48	12.98	13.20
L1	-	2.93	-
ΦP1（上口）	2.98	3.18	3.38
ΦP2（下口）	3.20	3.40	3.60
Q	3.10	3.30	3.50
θ1		5°	
θ2		45°	
θ2		5°	
θ3		5°	

68mΩ, 600V, Super Junction N-Channel Power MOSFET SRC60R068BS

Mechanical Dimensions

TO-220F（Package 3） **Unit: mm**

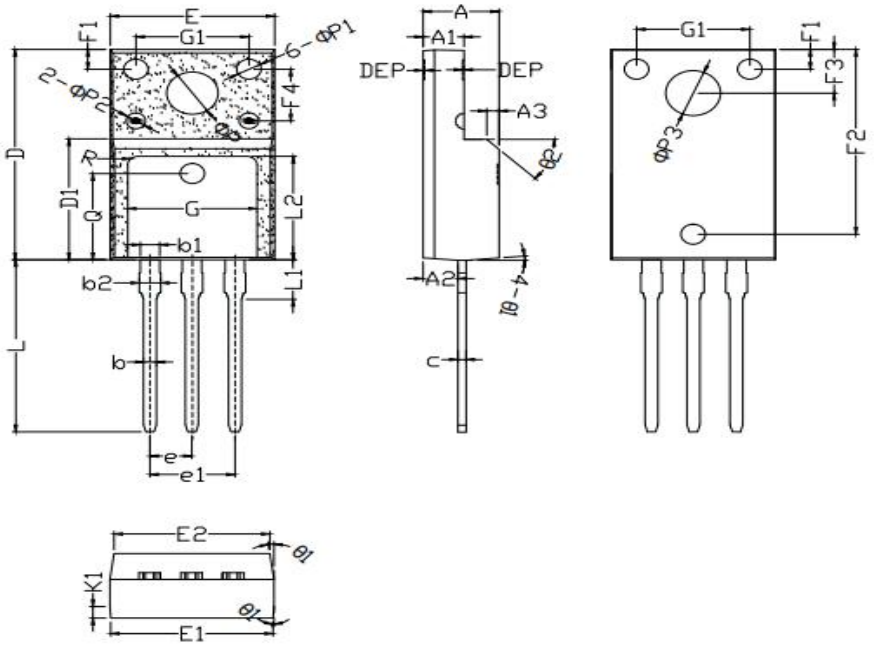

Symbol	Dimensions(mm)		
	Min.	Typ.	Max.
A	4.50	4.70	4.90
A1	2.34	2.54	2.74
A2	2.60	2.80	2.95
A3		1.0REF	
b	0.75	0.80	0.85
b1	1.18	1.20	1.24
b2	1.18	1.24	1.30
c	0.45	0.50	0.55
D	15.67	15.87	16.07
D1	9.04	9.12	9.20
E	10.00	10.16	10.30
E1	9.94	10.06	10.30
E2	9.40	9.50	9.60
e	2.50	2.54	2.58
e1		5.08REF	
L	12.78	12.98	13.18
L1	2.70	2.92	3.20
L2	7.70	7.80	7.90
Q		6.50REF	
ΦP	3.08	3.18	3.28
ΦP1	1.45	1.55	1.65
ΦP2	0.95	1.15	1.35
ΦP3	3.30	3.40	3.50
θ1	3°	5°	7°
θ2	42°	45°	48°
F1	1.40	1.50	1.60
F2	13.80	13.90	14.00
F3	3.20	3.30	3.40
F4	3.70	3.90	4.10
G	7.80	8.00	8.20
G1	6.90	7.00	7.10
K1	0.65	0.70	0.75

68mΩ, 600V, Super Junction N-Channel Power MOSFET **SRC60R068BS**

Mechanical Dimensions

TO-247(Package 1)

Unit: mm

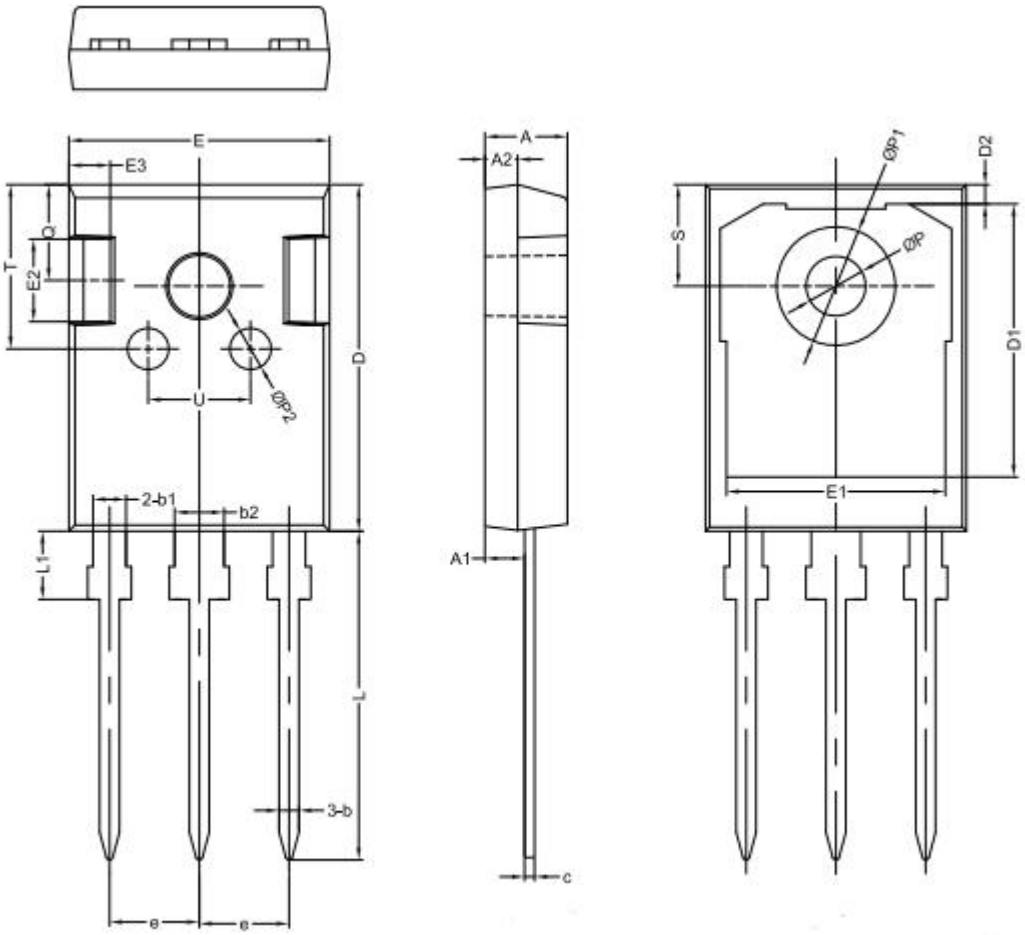

Symbol	Dimensions(mm)			Symbol	Dimensions(mm)		
	Min.	Typ.	Max.		Min.	Typ.	Max.
A	4.80	5.00	5.20	E1	-	13.30	-
A1	2.21	2.41	2.61	E2	-	5.00	-
A2	1.90	2.00	2.10	E3	-	2.50	-
b	1.10	1.20	1.35	L	19.42	19.92	20.42
b1	-	2.00	-	L1	-	4.13	-
b2	-	3.00	-	P	3.50	3.60	3.70
c	0.55	0.60	0.75	P1	-	7.19	-
D	20.80	21.00	21.20	P2	-	2.50	-
D1	-	16.55	-	Q	-	5.80	-
D2	-	1.20	-	S	6.05	6.15	6.25
E	15.60	15.80	16.0	T	-	10.00	-
U	-	6.20	-				

Mechanical Dimensions

TO-247(Package 2) **Unit: mm**

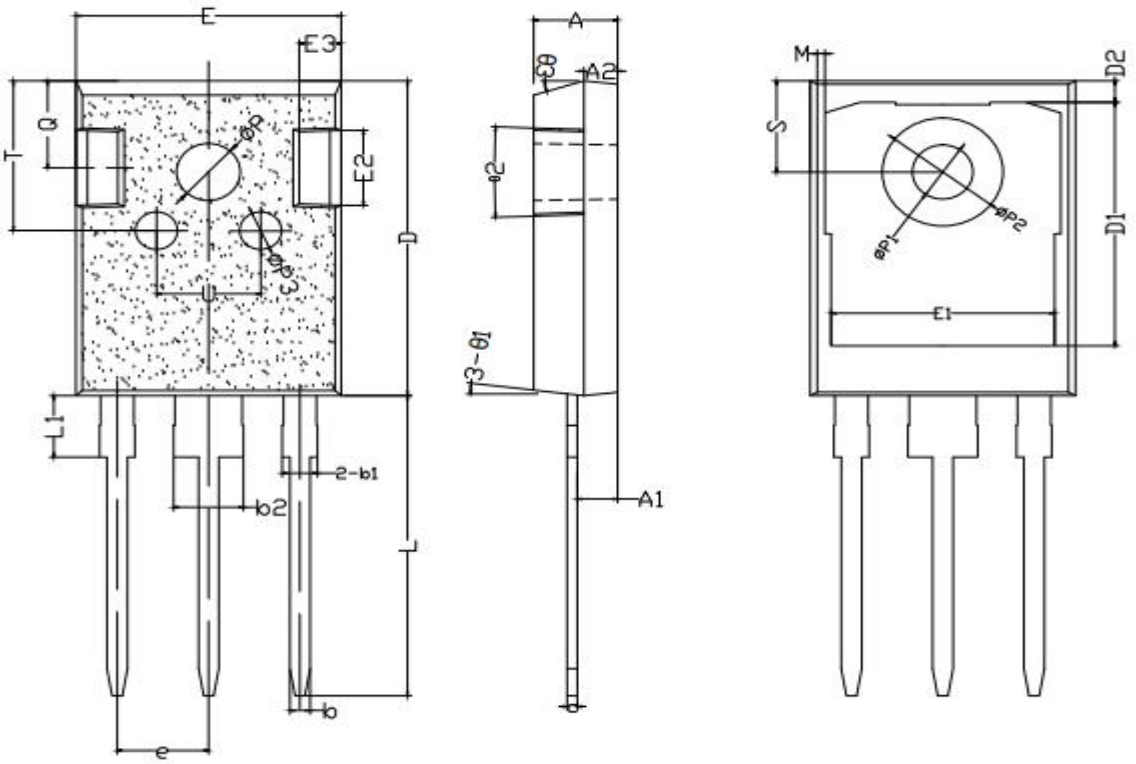

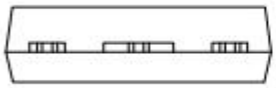

Symbol	Dimensions(mm)			Symbol	Dimensions(mm)		
	Min.	Typ.	Max.		Min.	Typ.	Max.
A	4.90	5.00	5.10	E1	13.10	13.25	13.40
A1	2.31	2.41	2.51	E2	4.85	4.95	5.10
A2	1.90	2.00	2.10	E3	2.40	2.50	2.60
b	1.15	1.20	1.25	L	19.80	19.98	20.15
b1	1.95	2.10	2.25	L1	-	-	4.30
b2	2.95	3.10	3.25	ΦP	3.60	3.70	3.80
c	0.55	0.60	0.65	ΦP1	3.40	3.50	3.60
D	20.90	21.00	21.10	ΦP2	6.90	7.10	7.30
D1	16.35	16.55	16.75	Q	5.60	5.80	6.00
D2	1.05	1.20	1.35	S	6.05	6.15	6.25
E	15.70	15.80	15.90	T	9.80	10.00	10.20
U	6.00	6.20	6.40	e	5.40	5.44	5.48
Θ1	5°	7°	9°	ΦP3	2.40	2.50	2.60
Θ2	1°	3°	5°	Θ3	13°	15°	17°

Mechanical Dimensions

TO-247(Package 3)

Unit: mm

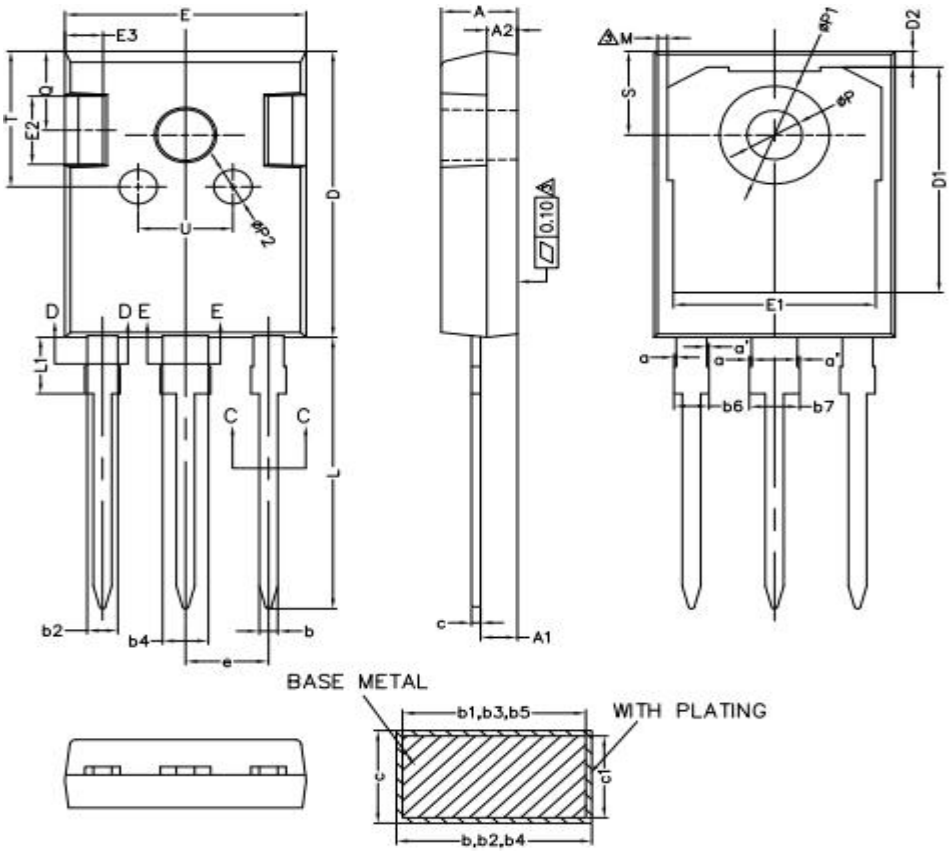

Symbol	Dimensions(mm)			Symbol	Dimensions(mm)		
	Min.	Typ.	Max.		Min.	Typ.	Max.
A	4.90	5.00	5.10	c1	0.58	0.60	0.62
A1	2.31	2.41	2.51	D	20.90	21.00	21.10
A2	1.90	2.00	2.10	D1	16.25	16.55	16.85
b	1.16	-	1.26	D2	1.05	1.20	1.35
b1	1.15	1.20	1.22	E	15.70	15.80	15.90
b2	1.96	-	2.06	E1	13.10	13.30	13.50
b3	1.95	2.00	2.02	E2	4.90	5.00	5.10
b4	2.96	-	3.06	E3	2.40	2.50	2.60
b5	2.95	3.00	3.02	e	5.34	5.44	5.54
b6	-	-	2.25	L	19.80	19.92	20.10
b7	-	-	3.25	L1	3.95	4.13	4.30
c	0.59	-	0.66	M	0.35	-	0.95
P	3.50	3.60	3.70	P1	7.00	-	7.40
P2	2.40	2.50	2.60	Q	5.60	-	6.00
S	6.05	6.15	6.25	T	9.80	-	10.20
U	6.00	-	6.40	a	0	-	0.15
a’	0	-	0.15				

Mechanical Dimensions

TO-247(Package 4)

Unit: mm

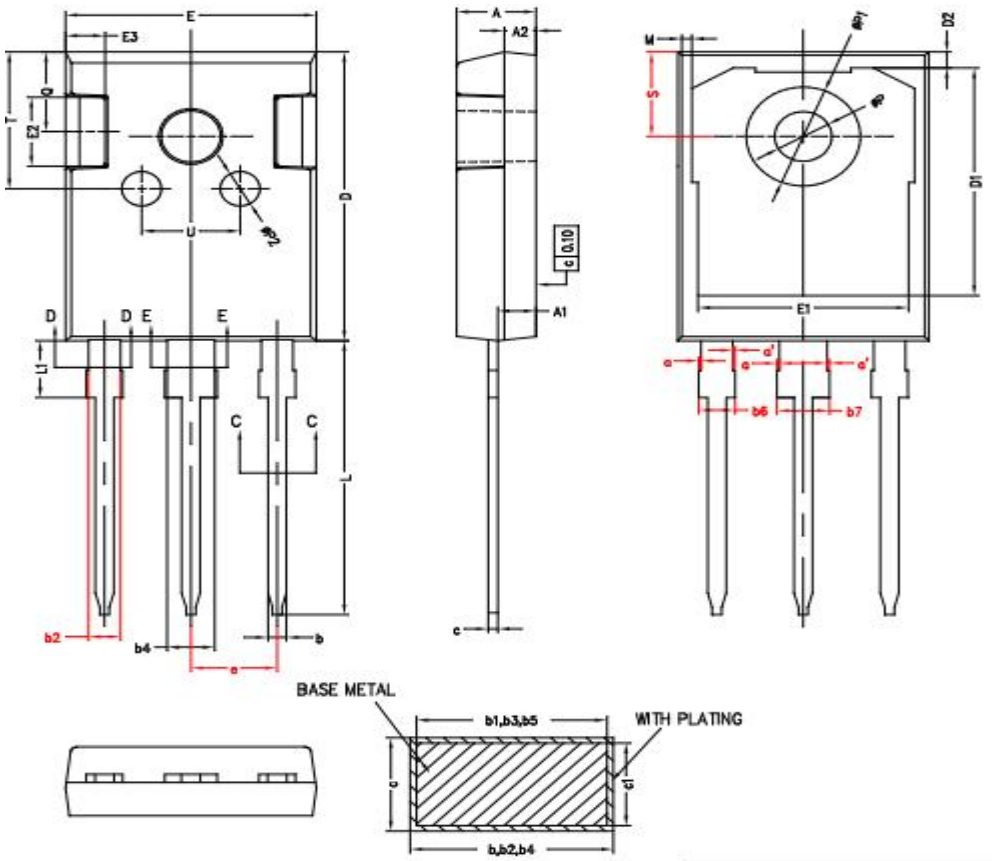

Symbol	Dimensions(mm)			Symbol	Dimensions(mm)		
	Min.	Typ.	Max.		Min.	Typ.	Max.
A	4.90	5.00	5.10	E2	4.90	5.00	5.10
A1	2.31	2.41	2.51	E3	2.40	2.50	2.60
A2	1.90	2.00	2.10	e	5.34	5.44	5.54
b	1.12	-	1.22	L	19.80	19.92	20.10
b1	1.11	1.16	1.18	L1	3.95	4.13	4.30
b2	1.96	-	2.06	P	3.50	3.60	3.70
c	0.59	-	0.66	P1	7.00	-	7.40
D	20.90	21.00	21.10	P2	2.40	2.50	2.60
D1	16.25	16.55	16.85	Q	5.60	-	6.00
D2	1.05	1.20	1.35	S	6.05	6.15	6.25
E	15.70	15.80	15.90	T	9.80	-	10.20
E1	13.10	13.30	13.50	U	6.00	-	6.40
b3	1.95	2.00	2.02	b6	-	-	2.25
b4	2.96	-	3.06	b7	-	-	3.25
b5	2.95	3.00	3.02	c1	0.58	0.60	0.62
M	0.35	-	0.95	a	0	-	0.15
a’	0	-	0.15				

Mechanical Dimensions

TO-220C（Package 1） **Unit: mm**

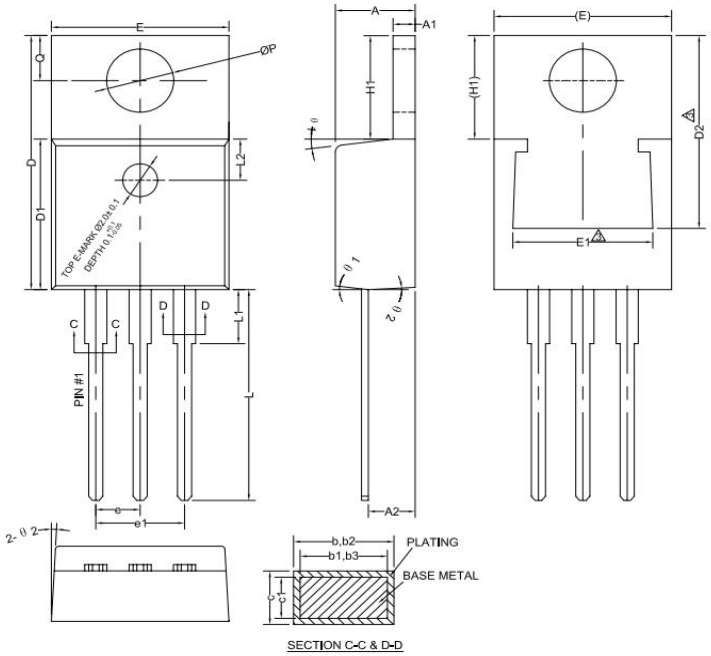

Symbol	Dimensions(mm)		
	Min.	Typ.	Max.
A	4.40	4.57	4.70
A1	1.22	-	1.32
A2	2.59	2.69	2.79
b	0.77	-	0.90
b1	0.76	0.81	0.86
b2	1.23	-	1.36
b3	1.22	1.27	1.32
c	0.34	-	0.47
c1	0.33	0.38	0.43
D	15.15	15.45	15.75
D1	9.05	9.15	9.25
D2	11.40	-	12.88
E	9.96	10.16	10.36
E1	6.86	-	8.89
e	2.44	2.54	2.64
e1	4.98	5.08	5.18
H1	6.10	6.30	6.50
L	12.70	-	13.12
L1	-	-	3.90
ΦP	3.80	3.84	3.88
Q	2.60	-	2.90
θ1	5°	7°	9°
θ2	1°	2°	5°

Mechanical Dimensions

TO-220C（Package 2） **Unit: mm**

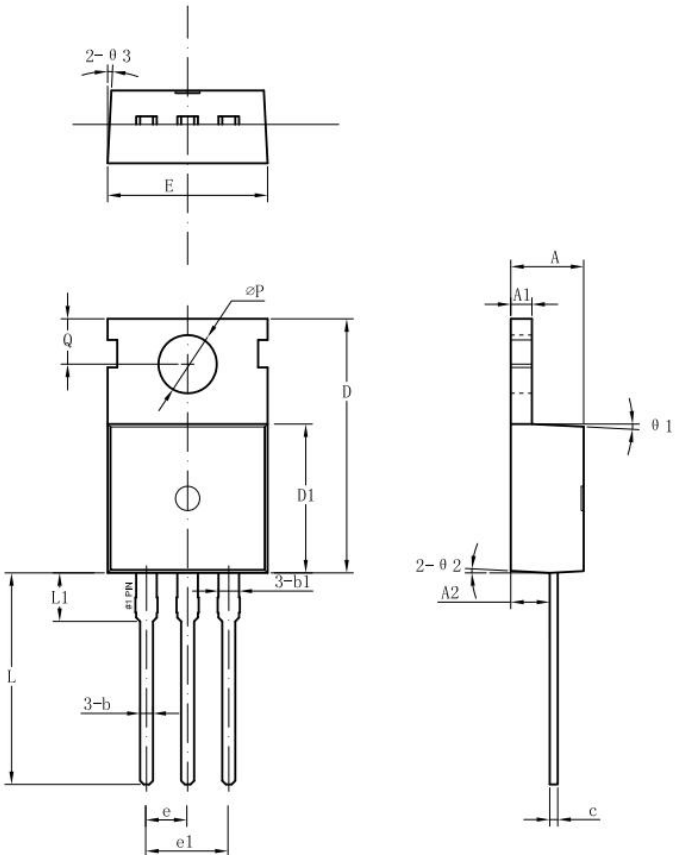

Symbol	Dimensions(mm)		
	Min.	Typ.	Max.
A	4.30	4.50	4.70
A1	1.25	1.30	1.40
A2	2.20	2.40	2.60
b	0.70	0.80	0.95
b1	-	1.27	-
c	0.40	0.50	0.65
D	15.20	15.70	16.20
D1	9.00	9.20	9.40
E	9.70	10.00	10.20
e		2.54	
e1		5.08	
L	12.60	13.08	13.60
L1	-	3.00	-
ΦP	3.50	3.60	3.80
Q	2.60	2.80	3.00
θ1		3°	
θ2		3°	
θ2		3°	

Mechanical Dimensions

TO-220C（Package 3） **Unit: mm**

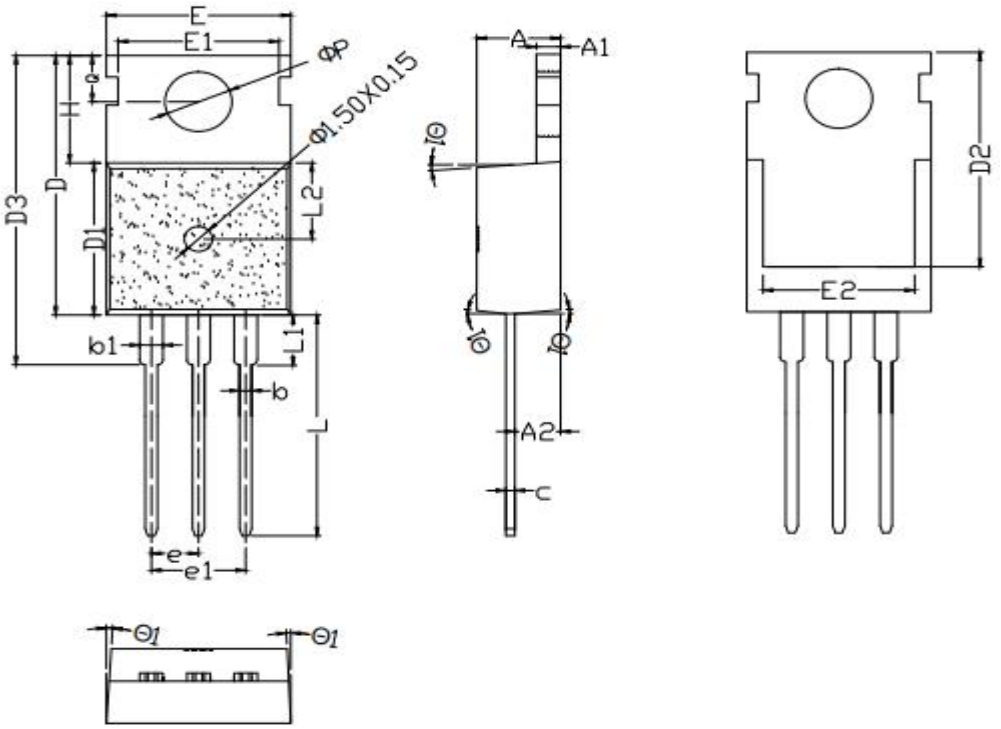

Symbol	Dimensions(mm)		
	Min.	Typ.	Max.
A	4.40	4.50	4.60
A1	1.25	1.30	1.35
A2	2.30	2.40	2.50
b	0.70	0.80	0.90
b1	1.25	1.33	1.42
c	0.45	0.50	0.55
D	15.50	15.75	16.00
D1	9.10	9.20	9.30
D2	12.90	13.10	13.30
D3	15.45	15.80	16.15
E	9.80	10.02	10.15
e	2.54BSC		
e1	5.08BSC		
L	13.00	13.28	13.45
L1	-	-	3.40
ΦP	3.55	3.65	3.75
Q	2.65	2.75	2.85
θ1	2°	-	7°
E1	8.55	8.70	8.85
E2	7.40	7.60	7.80
H	6.40	6.50	6.60
L2	4.50	4.65	4.80

Shenzhen Sanrise Technology Co., LTD

http://www.sanrise-tech.com

IMPORTANT NOTICE

Shenzhen Sanrise Technology Co., LTD reserves the right to make changes without further notice to any products or specifications herein. Shenzhen Sanrise Technology Co., LTD does not assume any responsibility for use of any its products for any particular purpose, nor does Shenzhen Sanrise Technology Co., LTD assume any liability arising out of the application or use of any its products or circuits. Shenzhen Sanrise Technology Co., LTD does not convey any license under its patent rights or other rights nor the rights of others.

Main Site:

- Headquarter

Shenzhen Sanrise Technology Co., LTD

A1206, Skyworth building, No. 008, gaoxinnan 1st Road, Gaoxin District, Yuehai street,, Nanshan District, ShenZhen, P.R.China

Tel: +86-755-22953335

Fax: +86-755-22916878

- Shanghai Office

Shenzhen Sanrise Technology Co., LTD

Rm.401, Building B, No. 666, Zhangheng Road, Zhangjiang Hi-Tech Park, Shanghai, P.R.China

Tel: +86-21-68825918