1.2mΩ, 45V, N-Channel Power MOSFET SRT045N012HS

General Description

The Sanrise SRT045N012HS is a low voltage power MOSFET, fabricated using advanced split gate trench technology. The resulting device has extremely low on resistance, low gate charge and fast switching time, making it especially suitable for applications which require superior power density and synchronous rectification.

The SRT045N012HS break down voltage is 45V and it has a high rugged avalanche characteristics. The SRT045N012HS is available in PDFN5*6 package.

Symbol

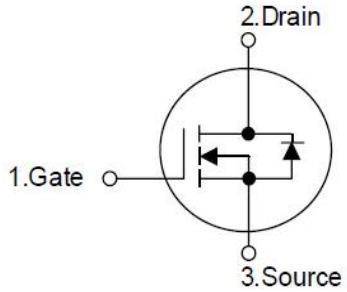

Figure 1 Symbol of SRT045N012HS

Features

- Ultra Low $R_{DS(ON)_TYP}$ = 1.07mΩ @V_{GS} = 10V.
- Ultra Low Gate Charge, Qg=73nC typ.
- Fast switching capability
- Robust design with better EAS performance
- EMI Improved
- Non-automotive Qualified

Application

- Server/Telecom
- DC/DC Converter
- High Power Supply
- E-Tools
- BMS

Package Type

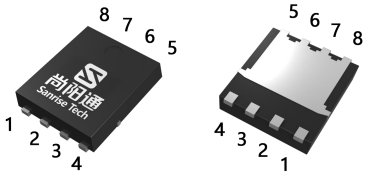

PDFN5*6

Figure 2 Package Type of SRT045N012HS

Ordering Information

SRT045N012H□□–□

Circuit Type

Package
D56: PDFN5*6

E: Lead Free
GS: Green

Blank: Tube
TR: Tape & Reel

Package	Part Number		Marking ID		Packing Type
	Lead Free	Green	Lead Free	Green	
PDFN5*6	SRT045N012HD56TR-ES	SRT045N012HD56TR-GS	SRT045N012HD56ES	SRT045N012HD56GS	Tape & Reel

Absolute Maximum Ratings

Parameter		Symbol	Rating	Unit
Drain-Source Voltage		V_{DSS}	45	V
Gate-Source Voltage		V_{GSS}	±20	V
Continuous Drain Current, Silicon	T_C=25ºC	I_D	228	A
	T_C=100ºC		144	
Pulsed Drain Current (Note 3)		I_{DM}	912	A
Power Dissipation (T_C = 25°C)		P_D	131	W
Avalanche Destructive Energy, Single Pulse (Note 5)		E_{AS_Limit}	625	mJ
Avalanche Energy, Single Pulse (Note 4)		E_{AS}	121	mJ
Avalanche Energy, Repetitive (Note 3)		E_{AR}	0.3	mJ
Avalanche Current, Repetitive (Note 3)		I_{AR}	50.0	A
Continuous Diode Forward Current		I_S	228	A
Diode Pulse Current		$I_{S.PULSE}$	912	A
Operating Junction Temperature		T_J	150	ºC
Storage Temperature		T_{STG}	-55 to 150	ºC
Lead Temperature (Soldering, 10 sec)		T_{LEAD}	260	ºC

Note:
1. Absolute maximum ratings are those values beyond which the device could be permanently damaged. Absolute maximum ratings are stress ratings only and functional device operation is not implied.
2. Current Limited by Package.
3. Repetitive Rating: Pulse width limited by maximum junction temperature
4. I_{AS}= 22A, V_{DD}= 20V, R_G= 25Ω, Starting T_J= 25°C
5. I_{AS_Limit}= 50.0A, V_{DD}= 20V, R_G= 25Ω, Starting T_J= 25°C

Thermal Resistance

Parameter		Symbol	Min	Typ	Max	Unit
Thermal Resistance，Junction-to-Case	PDFN5*6	R_{thJC}			0.95	ºC/W
Thermal Resistance，Junction-to-Ambient	PDFN5*6	R_{thJA}			50	

Electrical Characteristics

T_J = 25℃, unless otherwise specified.

Parameter		Symbol	Test Conditions	Min	Typ	Max	Unit
Statistic Characteristics							
Drain-Source Breakdown Voltage		BV_{DSS}	V_{GS}=0V, I_D=250uA	45			V
Zero Gate Voltage Drain Current		I_{DSS}	V_{DS}=45V, V_{GS}=0V			1	uA
Gate-Body Leakage Current	Forward	I_{GSSF}	V_{GS}=20V, V_{DS}=0V			2	uA
	Reverse	I_{GSSR}	V_{GS}=-20V, V_{DS}=0V			-2	
Gate Threshold Voltage		$V_{GS(TH)}$	V_{DS}=V_{GS}, I_D=0.25mA	2.0	3.0	4.0	V
Static Drain-Source On-Resistance		$R_{DS(ON)}$	V_{GS}=10V, I_D=60A		1.07	1.2	mΩ
Gate Resistance		R_G	f=1MHz, Open Drain		1.1		Ω
Dynamic Characteristics							
Input Capacitance		C_{ISS}	V_{DS}=20V, V_{GS}=0V, f=1MHz		5.2		nF
Output Capacitance		C_{OSS}			2.0		nF
Reverse Transfer Capacitance		C_{RSS}			125		pF
Effective output capacitance, energy related NOTE5		$C_{O(er)}$	V_{GS}=0V, V_{DS}=0…20V		3.1		nF
Effective output capacitance, time related NOTE6		$C_{O(tr)}$			3.8		
Turn-on Delay Time		$t_{d(on)}$	V_{DD}=20V, I_D=50A R_G=1.6Ω, V_{GS}=10V		18		ns
Rise Time		t_r			50		
Turn-off Delay Time		$t_{d(off)}$			54		
Fall Time		t_f			12		
Gate Charge Characteristics							
Gate to Source Charge		Q_{gs}	V_{DD}=20V, I_D=50A V_{GS}=0 to 10V		24		nC
Gate to Drain Charge		Q_{gd}			13		
Gate Charge Total		Q_g			73		
Gate Plateau Voltage		$V_{plateau}$			4.9		V
Gate Charge Total, sync FET		Q_g	V_{DD}=0.1V, V_{GS}=0 to 10V		69		nC
Reverse Diode Characteristics							
Drain-Source Diode Forward Voltage		V_{SD}	V_{GS}=0V, I_{SD}=50A		0.84	1.0	V
Reverse Recovery Time		t_{rr}	V_R=20V, I_F=50A dI_F/dt=100A/us		62		ns
Reverse Recovery Charge		Q_{rr}			130		nC
Peak Reverse Recovery Current		I_{rrm}			4.3		A

Note:

5. $C_{O(er)}$ is a fixed capacitance that gives the same stored energy as C_{OSS} while V_{DS} is rising from 0 to 20V
6. $C_{O(tr)}$ is a fixed capacitance that gives the same charging time as C_{OSS} while V_{DS} is rising from 0 to 20V

Typical Performance Characteristics

Figure 3: Power Dissipation	Figure 4: Max. Transient Thermal Impedance
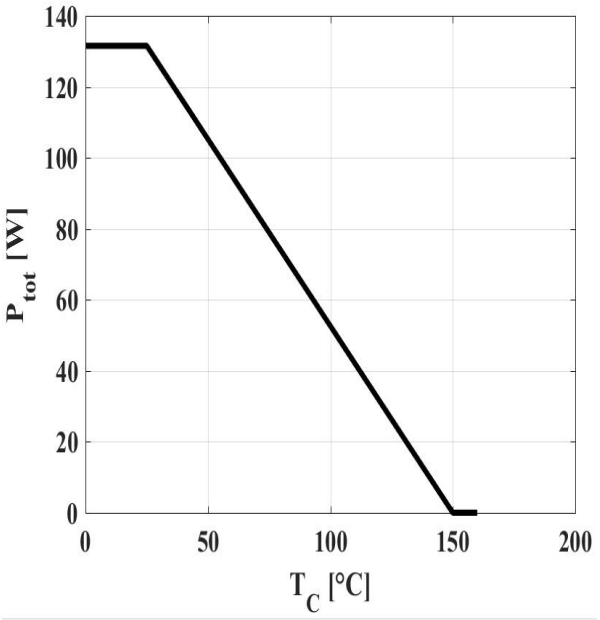	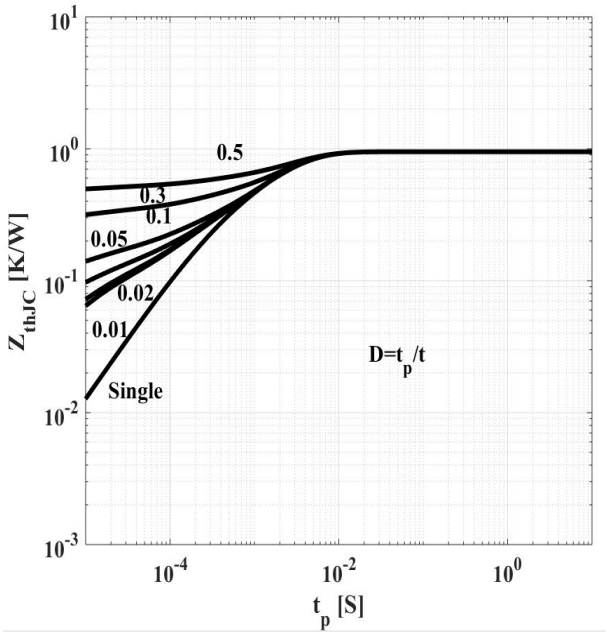
$P_{tot}=f(T_c)$	$Z_{(thJC)}=f(t_p)$; parameter: $D=t_p/T$

Figure5: Drain Current	Figure6: Typ. Output Characteristics
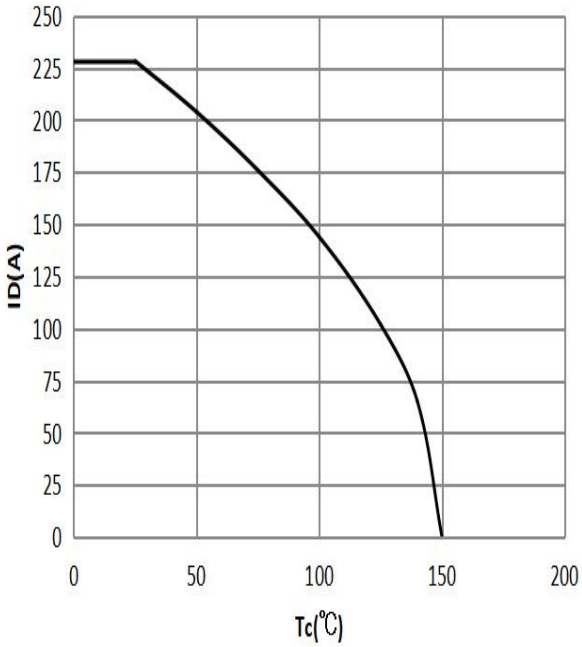	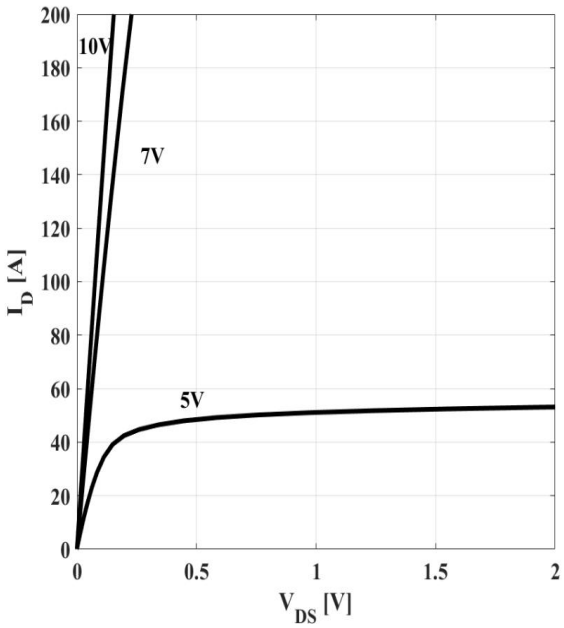
$I_D=f(T_C)$;$V_{GS}\geq10V$	$I_D=f(V_{DS})$;Tj=25°C; parameter: V_{GS}

Figure7: Typ. Drain-Source On-State Resistance

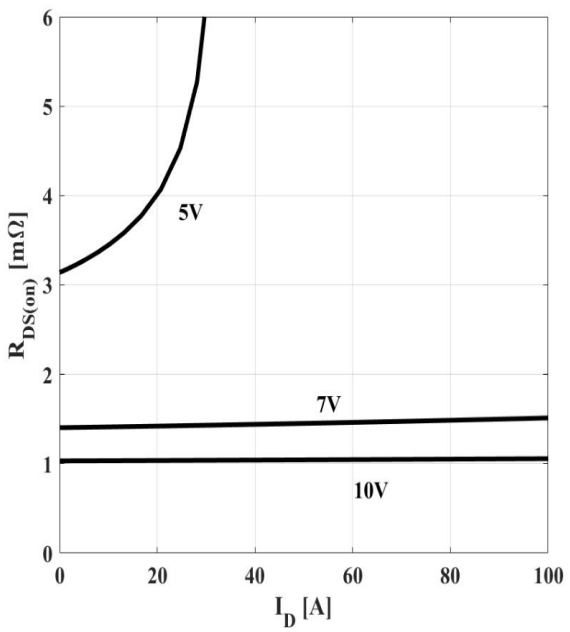

$R_{DS(ON)}=f(I_D)$;T_j=25ºC; parameter: V_{GS}

Figure8: Typ. Transfer Characteristics

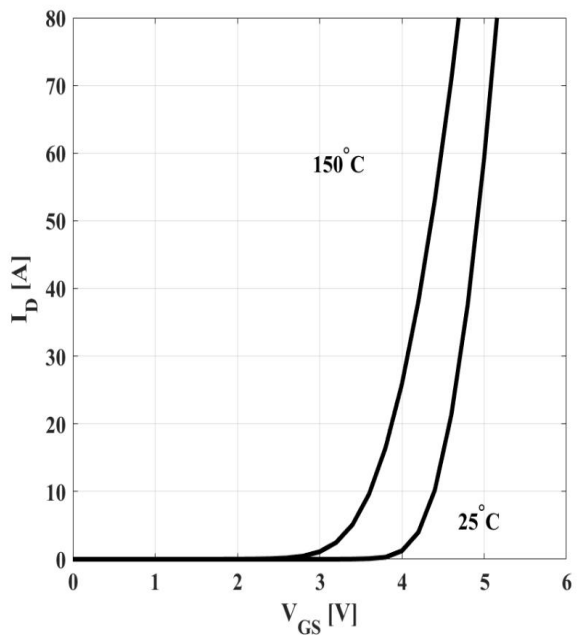

$I_D=f(V_{GS})$; $|V_{DS}|>2|I_D|R_{DS(on)max}$; parameter: T_j

Figure9: Typ. Forward Transconductance

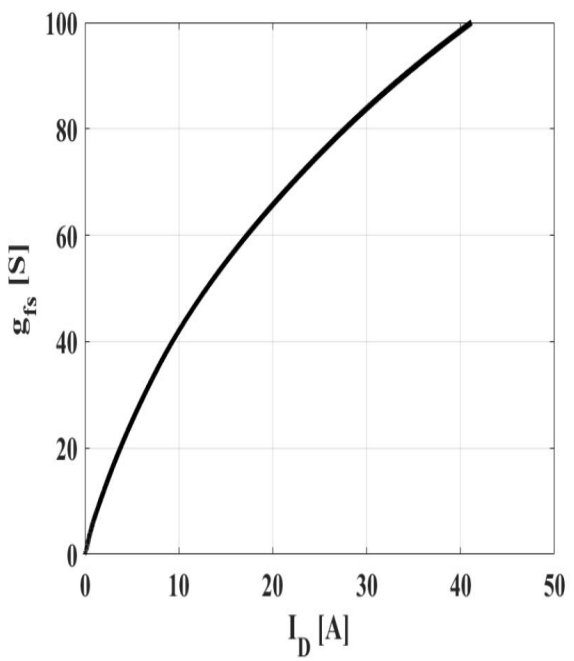

$g_{fs}=f(I_D)$; T_j=25°C

Figure10: Typ. Drain-Source On-State Resistance

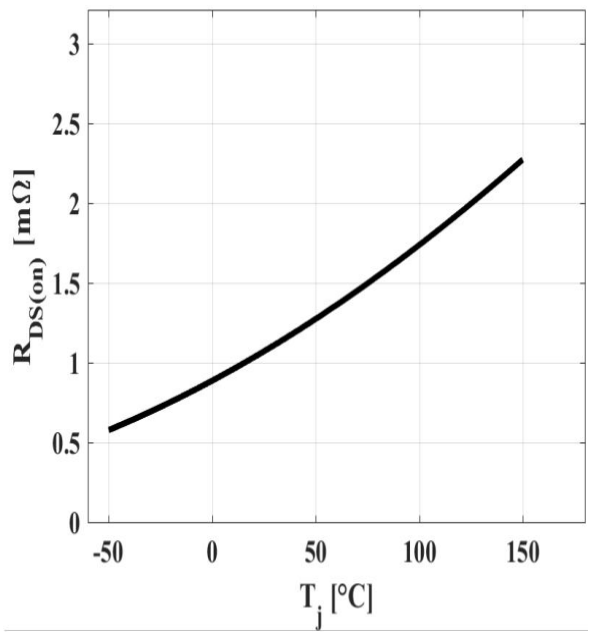

$R_{DS(ON)}=f(T_j)$;I_D=50A;V_{GS}=10V

Figure11: Typ. Gate Threshold Voltage

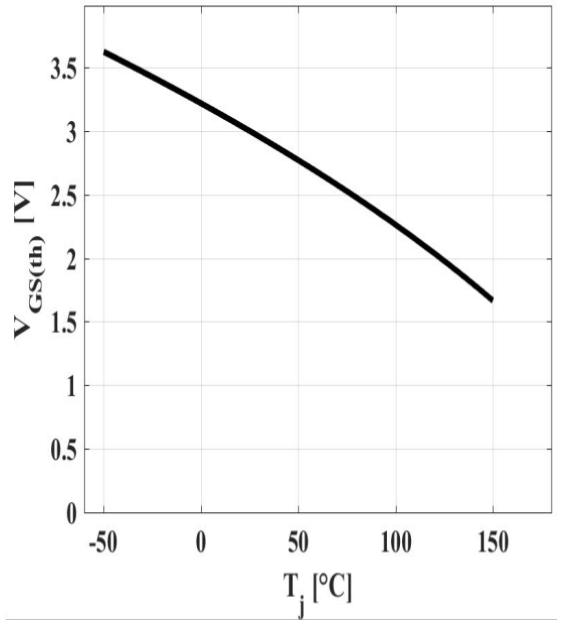

$V_{GS(th)}=f(T_j)$; $V_{GS}=V_{DS}$; $I_{DS}=250\mu A$

Figure 12: Typ. Gate Charge

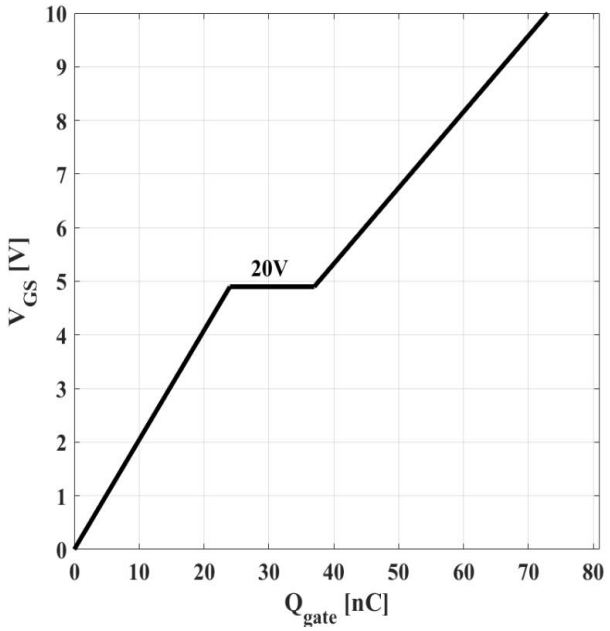

$V_{GS}= f(Q_{gate})$, $I_D=50A$ pulsed

Figure 13: Drain-Source Leakage Current

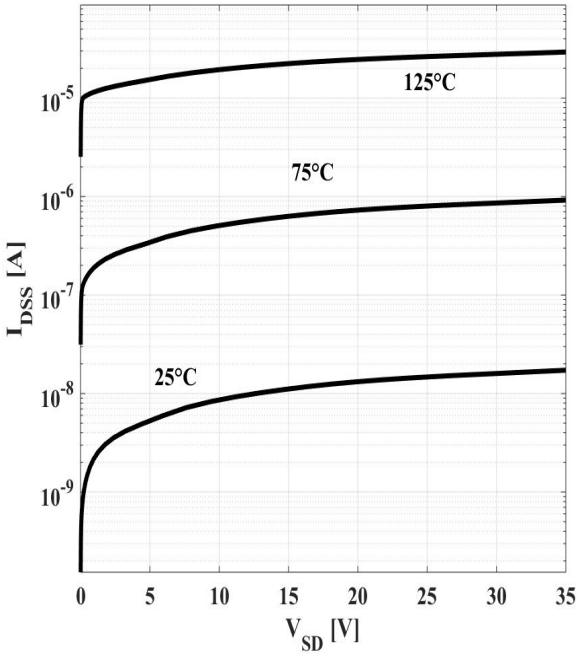

$I_{DSS}=f(V_{DS})$; $V_{GS}=0V$; parameter: T_j

Figure 14: Forward Characteristics of Reverse Diode

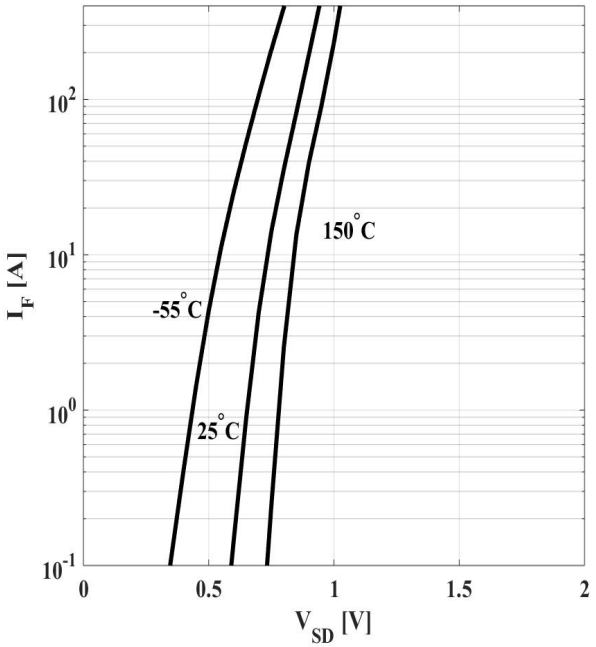

$I_F=f(V_{SD})$; parameter: T_j

Figure 15: Avalanche Energy

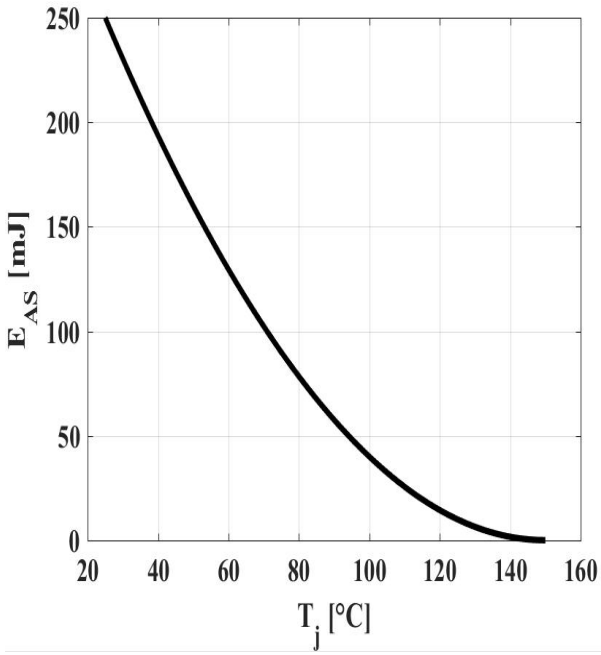

$E_{AS}=f(T_j)$;I_D=50.0A; V_{DD}=20V

Figure 16: Typ. Capacitances

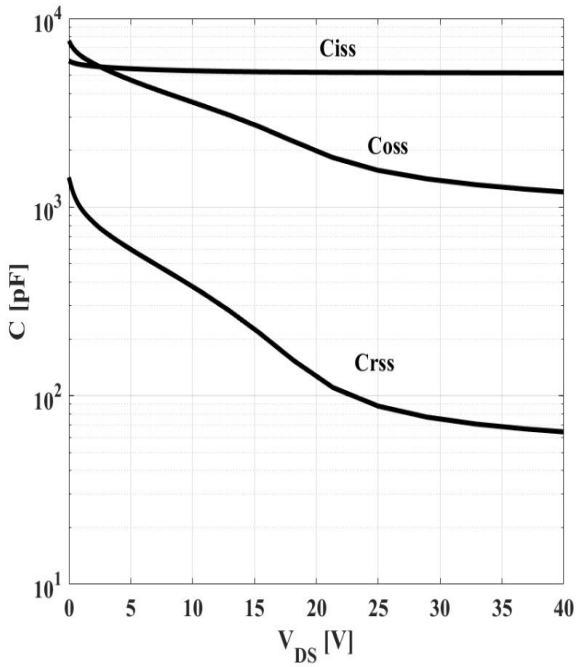

$C=f(V_{DS})$; V_{GS}=0; f=1MHz

Figure 17: C_{OSS} Stored Energy

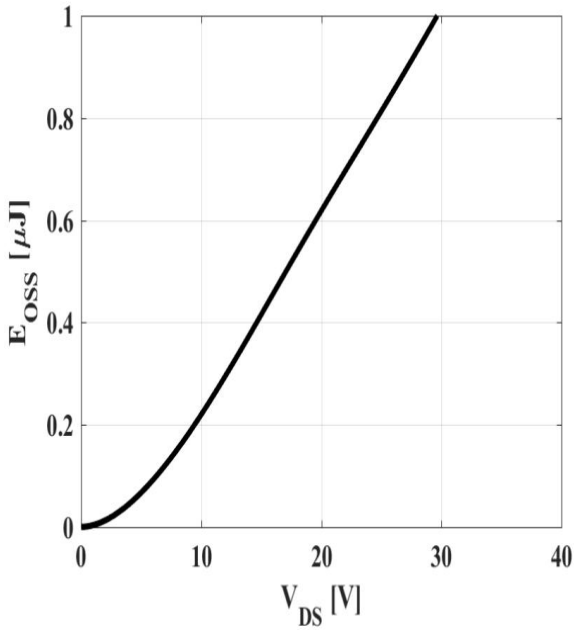

$E_{OSS}=f(V_{DS})$

Figure 18: Safe Operating Area

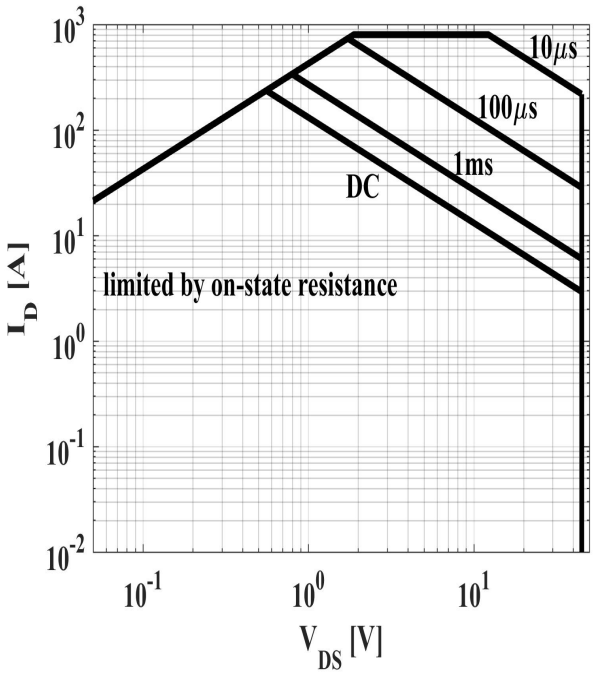

$I_D = f(V_{DS})$; T_c= 25ºC; V_{GS}>7V; parameter t_p

Test Circuits

1. Gate Charge Test Circuit & Waveform

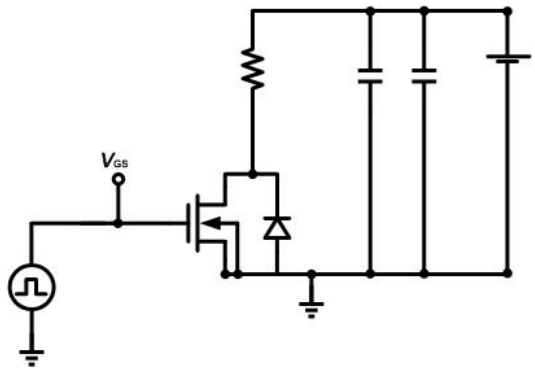

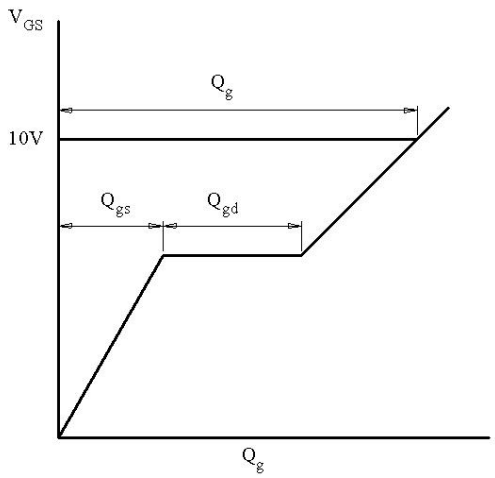

2. Switch Time Test Circuit

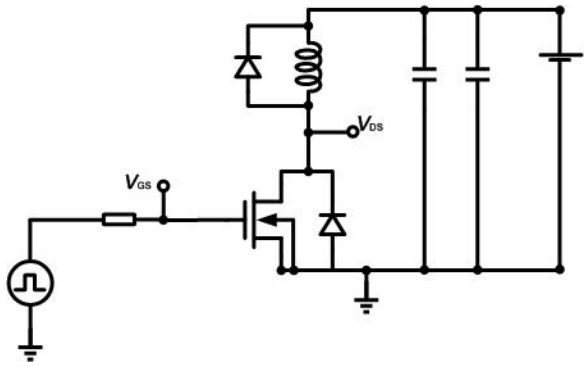

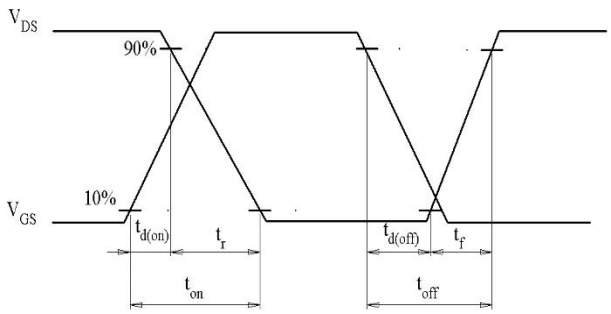

3. Unclamped Inductive Switching Test Circuit & Waveforms

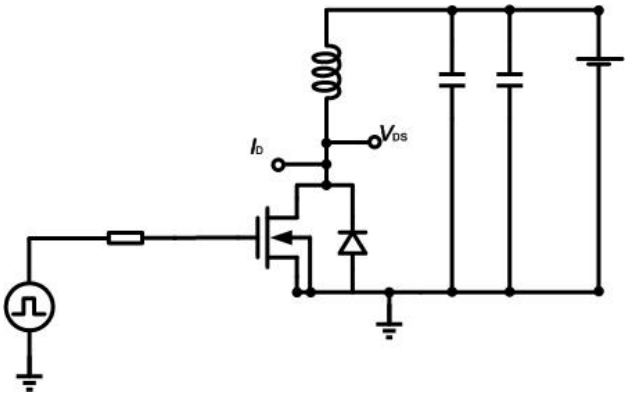

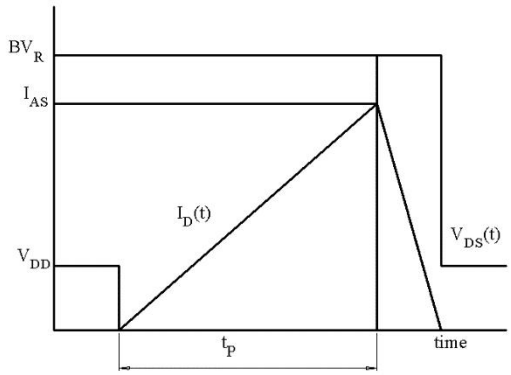

4. Test Circuit and Waveform for Diode Characteristics

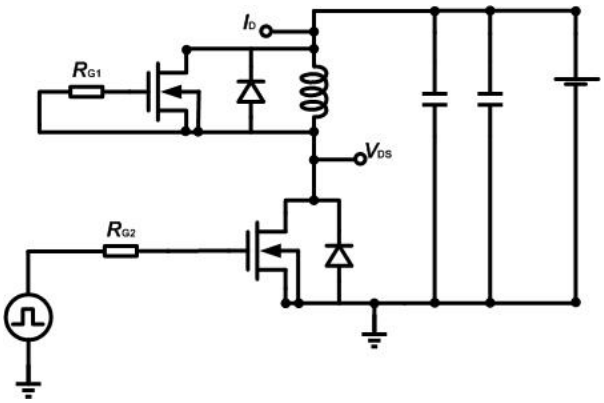

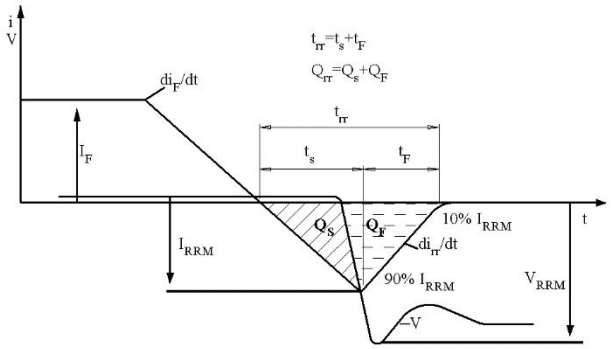

Mechanical Dimension

PDFN5*6-8 **Unit: mm**

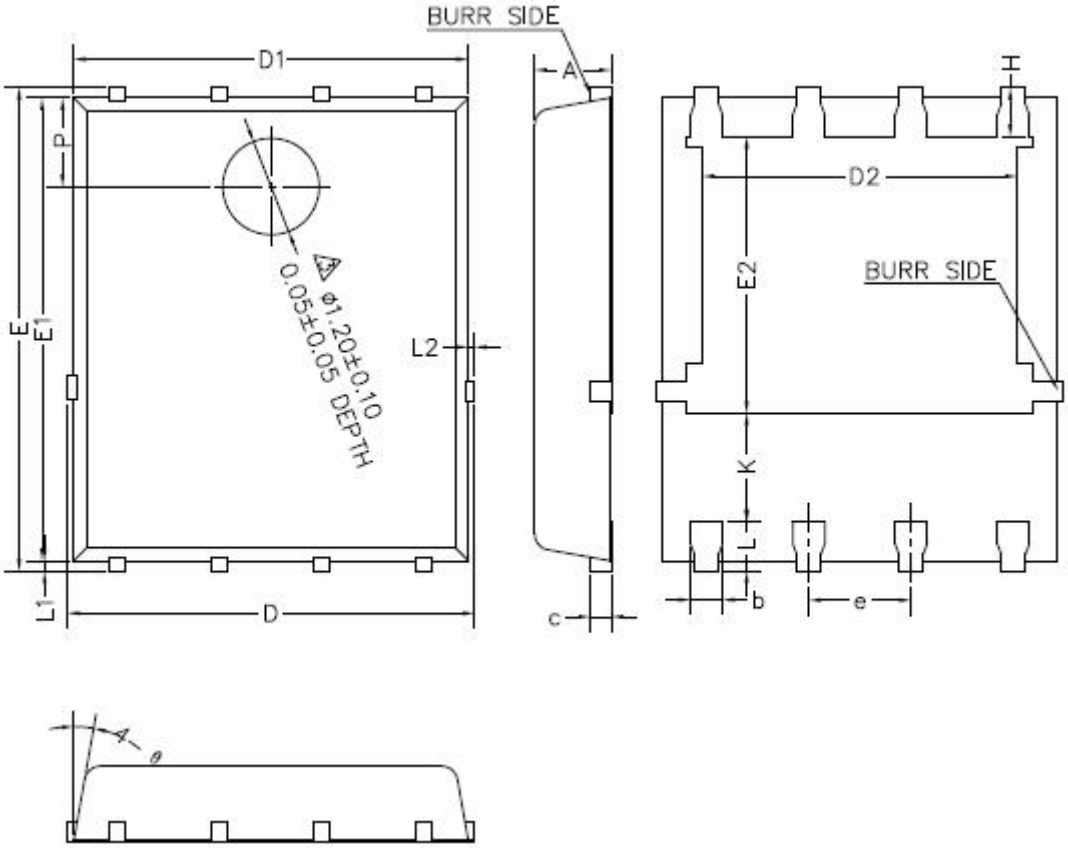

Symbol	Dimensions(mm)		
	Min.	Typ.	Max.
A	1.0	1.10	1.20
b	0.35	0.40	0.45
c	0.21	0.25	0.34
D			5.10
D1	4,80	4.90	5.00
D2	3.91	4.01	4.11
e	1.17	1.27	1.37
E	5.90	6.00	6.10
E1	5.70	5.75	5.80
E2	3.34	3.44	3.54
H	0.51	0.61	0.71
K	1.10		
L	0.51	0.61	0.71
L1	0.06	0.13	0.20
L2			0.10
P	1.00	1.10	1.20
θ	8º	10º	12º

Sanrise Technology Limited Company

http://www.sanrise-tech.com

IMPORTANT NOTICE

Shenzhen Sanrise Technology Co., LTD. reserves the right to make changes without further notice to any products or specifications herein. Shenzhen Sanrise Technology Co., LTD. does not assume any responsibility for use of any its products for any particular purpose, nor does Shenzhen Sanrise Technology Co., LTD. assume any liability arising out of the application or use of any its products or circuits. Shenzhen Sanrise Technology Co., LTD. does not convey any license under its patent rights or other rights nor the rights of others.

Main Site:

- Headquarter

Shenzhen Sanrise Technology Co., LTD.

A1206, Skyworth building, No. 008, gaoxinnan 1st Road, Gaoxin District, Yuehai street,, Nanshan District, ShenZhen, P.R.China

Tel: +86-755-22953335

Fax: +86-755-22916878

- Shanghai Office

Sanrise Technology Limited Company

Rm.401, Building B, No. 666, Zhangheng Road, Zhangjiang Hi-Tech Park, Shanghai, P.R.China

Tel: +86-21-68825918