TPS61376 23-V_{IN}, 25-V_{OUT}, 4.5-A, Boost Converter with up to ±2.5% accuracy Input Average Current Limit and True Load Disconnection

1 Features

- Wide input voltage and output voltage range
  - Input voltage range: 2.9 V to 23 V
  - Output voltage range: 4.5 V to 25 V
- Peak inductor current limit up to 4.5 A
- Programmable input average current limit range: 0.1 A to 3 A
- Switching frequency
  - TPS61376: 1.2 MHz
  - TPS613761: 650 KHz
- Integrated two MOSFETs
  - ISO FET: 40 mΩ
  - Low-side FET: 50 mΩ
- Safety and robust operation features
  - Output overvoltage protection
  - Cycle-by-cycle overcurrent protection
  - True disconnection between input and output during EN shutdown
  - Thermal shutdown
- Precise EN/UVLO threshold
- External loop compensation
- 2.5-mm × 2.0-mm HotRod™ Lite VQFN package

2 Applications

- ePOS retail automation and payment
- Barcode scanner
- Smart speaker
- Appliances

3 Description

The TPS61376 is a high voltage non-synchronous boost converter with input average current limit and true load disconnect functions. The input average current limit threshold can be programmed through the ILIM pin from 0.1 A to 3.0 A. The isolation FET between the VP and SW pin will completely cut off the path between input and output when the device is disabled. The TPS61376 has a wide input voltage range from 2.9 V to 23 V and output voltage covers up to 25 V.

The TPS61376 implements the peak current mode with the adaptive off-time control topology. The device works in PWM mode at moderate to heavy loads. At the light load conditions, the device enters PFM mode to maintain high efficiency over the entire load current range.

The TPS61376 also integrates robust protection features including output overvoltage protection, cycle-by-cycle overcurrent protection and thermal shutdown.

The TPS61376 offers a very small solution size with a 2.5-mm × 2.0-mm HotRod™ Lite VQFN package.

Device Information

PART NUMBER	PACKAGE(1)	BODY SIZE (NOM)
TPS61376	VQFN (13)	2.5 mm × 2.0 mm

(1) For all available packages, see the orderable addendum at the end of the data sheet.

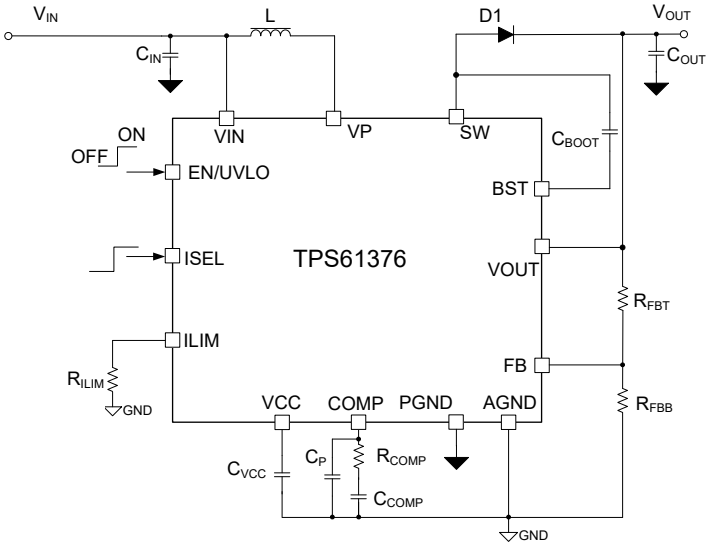

Typical Application Circuit

An IMPORTANT NOTICE at the end of this data sheet addresses availability, warranty, changes, use in safety-critical applications, intellectual property matters and other important disclaimers. PRODUCTION DATA.

Table of Contents

1 Features....1
2 Applications....1
3 Description....1
4 Revision History....2
5 Device Comparison Table....3
6 Pin Configuration and Functions....4
7 Specifications....5
7.1 Absolute Maximum Ratings....5
7.2 ESD Ratings....5
7.3 Recommended Operating Conditions....5
7.4 Thermal Information....5
7.5 Electrical Characteristics....6
7.6 Typical Characteristics....8
8 Detailed Description....10
8.1 Overview....10
8.2 Functional Block Diagram....10
8.3 Feature Description....10
8.4 Device Functional Modes....12
9 Application and Implementation....14
9.1 Application Information....14
9.2 Typical Application....14
9.3 Power Supply Recommendations....21
9.4 Layout....21
10 Device and Documentation Support....24
10.1 Device Support....24
10.2 Receiving Notification of Documentation Updates....24
10.3 Support Resources....24
10.4 Trademarks....24
10.5 Electrostatic Discharge Caution....24
10.6 Glossary....24
11 Mechanical, Packaging, and Orderable Information....24

4 Revision History

NOTE: Page numbers for previous revisions may differ from page numbers in the current version.

Changes from Revision * (January 2022) to Revision A (September 2022)	Page
• Changed device status from Advance Information to Production Data	1

Copyright © 2022 Texas Instruments Incorporated

5 Device Comparison Table

PART NUMBER	FREQUENCY
TPS61376	1.2 MHz
TPS613761	650 kHz

6 Pin Configuration and Functions

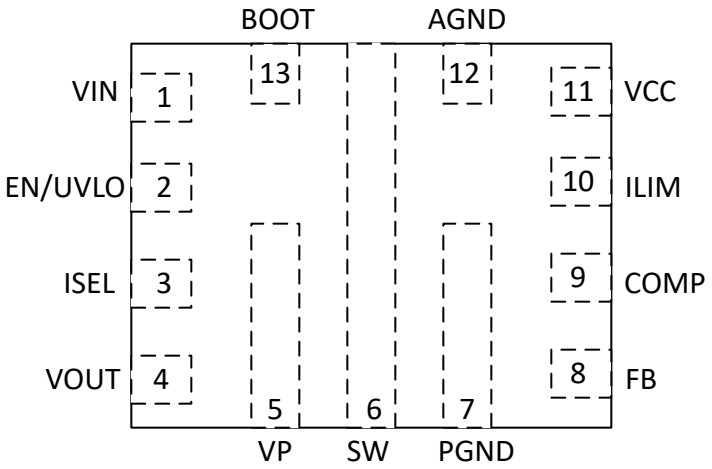

Figure 6-1. 13-Pin RYH VQFN Package (Top View)

Table 6-1. Pin Functions

PIN		I/O	DESCRIPTION
NAME	NUMBER		
VIN	1	I	IC power supply input
EN/UVLO	2	I	Enable logic input and programmable input voltage undervoltage lockout (UVLO) input. Logic high level enables the device. Logic low level disables the device and turns it into shutdown mode. The converter start-up and shutdown levels can be programmed by connecting this pin to the supply voltage through a resistor divider.
ISEL	3	I	Scale the ISO FET to improve input average current limit accuracy and adjust peak switching current limit value. ISEL = low when setting I_{limit} ≤ 750 mA ISEL = high, when setting I_{limit} > 750 mA
VOUT	4	PWR	Boost converter output
VP	5	PWR	Drain of the ISO MOSFET
SW	6	PWR	The switching node pin. It is connected to the drain of the internal low-side power MOSFET and the source of the internal ISO power MOSFET.
PGND	7	PWR	Power ground of the IC
FB	8	I	Output voltage feedback pin. Connect to the center tape of a resistor divider to program the output voltage.
COMP	9	O	Output of the internal error amplifier. Connect the loop compensation network between this pin and the AGND pin.
ILIM	10	I	Input average current limit setting pin. Use a resistor between this pin and AGND to set the desired input average current limit threshold.
VCC	11	O	Output of the internal regulator. A ceramic capacitor of more than 1 µF is required between this pin and AGND.
AGND	12	PWR	Analog ground of the IC
BOOT	13	O	Power supply for ISO MOSFET gate driver. A ceramic capacitor of more than 0.47 µF must be connected between this pin and the SW pin.

Copyright © 2022 Texas Instruments Incorporated

7 Specifications

7.1 Absolute Maximum Ratings

over operating free-air temperature range (unless otherwise noted)[1]

		MIN	MAX	UNIT
Voltage range at terminals [2]	VIN, EN/UVLO	-0.3	25	V
	SW, VOUT, VP	–0.3	30	V
	BST	–0.3	SW + 6	V
	ISEL, FB, ILIM, VCC, COMP	–0.3	6	V
T_J [3]	Operating junction temperature	–40	150	°C
T_{stg}	Storage temperature	–65	150	°C

(1) Stresses beyond those listed under *Absolute Maximum Ratings* may cause permanent damage to the device. These are stress ratings only, which do not imply functional operation of the device at these or any other conditions beyond those indicated under *Recommended Operating Conditions*. Exposure to absolute-maximum-rated conditions for extended periods may affect device reliability.
(2) All voltage values are with respect to network ground terminal.
(3) High junction temperatures degrade operating lifetime. Operating lifetime is de-rated for junction temperatures greater than 125°C

7.2 ESD Ratings

			VALUE	UNIT
$V_{(ESD)}$ [1]	Electrostatic discharge	Human-body model (HBM), per ANSI/ESDA/JEDEC JS-001[2]	±2000	V
		Charged-device model (CDM), per JEDEC specification JESD22-C101[3]	±750	

(1) Electrostatic discharge (ESD) to measure device sensitivity and immunity to damage caused by assembly line electrostatic discharges in to the device.
(2) Level listed above is the passing level per ANSI, ESDA, and JEDEC JS-001. JEDEC document JEP155 states that 500-V HBM allows safe manufacturing with a standard ESD control process. Manufacturing with less than 500-V HBM is possible with the necessary precautions.
(3) Level listed above is the passing level per EIA-JEDEC JESD22-C101. JEDEC document JEP157 states that 250-V CDM allows safe manufacturing with a standard ESD control process. Manufacturing with less than 250-V CDM is possible with the necessary precautions.

7.3 Recommended Operating Conditions

over operating free-air temperature range (unless otherwise noted)

		MIN	NOM	MAX	UNIT
V_{IN}	Input voltage	2.9		23	V
V_{OUT}	Output voltage	4.5		25	V
L	Inductance, effective value	2.2	4.7	10	µH
C_I	Input capacitance, effective value		10		µF
C_O	Output capacitance, effective value	10		2000	µF
T_J	Operating junction temperature	–40		125	°C

7.4 Thermal Information

THERMAL METRIC[1]		TPS61376 VQFN 13 PINS	UNIT
$R_{\theta JA}$	Junction-to-ambient thermal resistance	64.9	°C/W
$R_{\theta JC(top)}$	Junction-to-case (top) thermal resistance	50.4	°C/W
$R_{\theta JB}$	Junction-to-board thermal resistance	15.4	°C/W
ψ_{JT}	Junction-to-top characterization parameter	1.3	°C/W
ψ_{JB}	Junction-to-board characterization parameter	15.1	°C/W

(1) For more information about traditional and new thermal metrics, see the *Semiconductor and IC Package Thermal Metrics* application report, SPRA953.

Copyright © 2022 Texas Instruments Incorporated

7.5 Electrical Characteristics

T_J = -40 to 125°C, L = 4.7 µH, V_{IN} = 5 V and V_{OUT} = 12 V. Typical values are at T_J = 25°C, (unless otherwise noted)

PARAMETER	PARAMETER	TEST CONDITIONS	MIN	TYP	MAX	UNIT
POWER SUPPLY						
V_{IN}	Input voltage range		2.9		23	V
V_{IN_UVLO}	VIN under voltage lockout threshold	V_{IN} rising		2.8	2.9	V
		V_{IN} falling		2.6	2.7	V
V_{IN_HYS}	VIN UVLO hysteresis			200		mV
I_Q	Quiescent current into V_{OUT} pin	IC enabled, no load, no switching V_{IN} =2.9V to 5.25V, V_{OUT} = 25 V, V_{FB} = V_{REF} + 0.1 V		80	110	µA
I_Q	Quiescent current into V_{OUT} pin	IC enabled, no load, no switching V_{IN} = 5.5 V to 23 V, V_{OUT} = 25 V, V_{FB} = V_{REF} + 0.1 V		2	8	µA
	Quiescent current into V_{IN} pin	IC enabled, no load, no switching V_{IN} =2.9V to 5.25V, V_{FB} = V_{REF} + 0.1 V		1.5	2	µA
I_Q	Quiescent current into V_{IN} pin	IC enabled, no load, no switching V_{IN} = 5.5 V to 23 V, V_{FB} = V_{REF} + 0.1 V		80	110	µA
V_{CC_UVLO}	VCC UVLO threshold	V_{CC} rising		2.75		V
V_{CC_HYS}	VCC UVLO hysteresis	V_{CC} hysteresis		160		mV
V_{CC}	VCC regulation	I_{VCC} = 4 mA, V_{OUT} = 12 V		4.80		V
I_{SD}	Shutdown current into V_{IN} pin	IC disabled, V_{IN} = 2.9 V to 23 V, EN = GND			1.25	µA
I_{SW_LKG}	Leakage current into SW	IC disabled, VP = 0 V, SW = 25 V,T_J up to 85°C			2	uA
I_{VP_LKG}	Leakage current into VP	IC disabled, VP = 25 V, SW = 0 V,T_J up to 85°C			2	µA
I_{FB_LKG}	Leakage current into FB	IC disabled, T_J up to 85°C			16	nA
OUTPUT VOLTAGE						
V_{OVP}	Output over-voltage protection threshold	V_{IN} = 3.3 V, V_{OUT} rising	26.5	27.5	28.6	V
V_{OVP_HYS}	Output over-voltage protection hysteresis	V_{IN} = 3.3 V, OVP threshold		0.9		V
VOLTAGE REFERENCE						
V_{REF}	Reference Voltage at FB pin	T_J = -40 to 125°C	0.985	1	1.015	V
POWER SWITCH						
$R_{DS(on)}$	Low-side MOSFET on resistance	V_{CC} = 4.85 V,		50		mΩ
$R_{DS(on)}$	ISO MOSFET on resistance	V_{CC} = 4.85 V, ISEL = high		40		mΩ
$R_{DS(on)}$	ISO MOSFET on resistance(scale)	V_{CC} = 4.85 V, ISEL = low		160		mΩ
CURRENT LIMIT						
I_{LIM_SW}	Peak switching current limit	R_{LIM} = 14.4 kΩ , ISEL=high ,V_{IN}=2.9V to 23V	3.76	4.5	5.35	A
I_{LIM_SW}	Peak switching current limit	R_{LIM} = 14.4 kΩ , ISEL=low ,V_{IN}=2.9V to 23V	1.7	2.5	3.3	A
$I_{LIM_DC_Range}$	Input DC current limit range		0.1		3	A
$I_{LIM_DC_Accuracy}$	Input DC current limit 1.5 A to 3.0 A	VIN = 5 V, VOUT = 12 V, T_J = 25°C	-2.5		2.5	%
$I_{LIM_DC_Accuracy}$	Input DC current limit 0.75 A to 1.5 A	VIN = 5 V, VOUT = 12 V, T_J = 25°C	-5		5	%
$I_{LIM_DC_Accuracy}$	Input DC current limit 0.1 A to 0.75 A	VIN = 5 V, VOUT = 12 V, T_J = 25°C	-10		10	%
$I_{LIM_DC_Accuracy}$	Input DC current limit 0.75 A to 3.0 A	VIN = 2.9 V to 23 V, VOUT = 4.5 V to 25 V, T_J = -40 to 125°C	-5		5	%
$I_{LIM_DC_Accuracy}$	Input DC current limit 0.2 A to 0.75 A	VIN = 2.9 V to 23 V, VOUT = 4.5 V to 25 V, T_J = -40 to 125°C	-10		10	%
$I_{LIM_DC_Accuracy}$	Input DC current limit 0.1 A to 0.2 A	VIN = 2.9 V to 23 V, VOUT = 4.5 V to 25 V, T_J = -40 to 125°C	-20		20	%
SWITCHING FREQUENCY						

Copyright © 2022 Texas Instruments Incorporated

7.5 Electrical Characteristics (continued)

T_J = -40 to 125°C, L = 4.7 µH, V_{IN} = 5 V and V_{OUT} = 12 V. Typical values are at T_J = 25°C, (unless otherwise noted)

PARAMETER	PARAMETER	TEST CONDITIONS	MIN	TYP	MAX	UNIT
Fsw	TPS61376 Switching frequency	V_{IN}=2.9V to 23V, V_{OUT} = 4.5V to 25V		1200		kHz
Fsw	TPS613761 Switching frequency	V_{IN}=2.9V to 23V, V_{OUT} = 4.5V to 25V		650		kHz
T_{SS}	Soft-start time			4		ms
t_{OFF_min}	Minimum off time			120		ns
t_{ON_min}	Minimum on time			65		ns
ERROR AMPLIFIER						
I_{SINK}	COMP pin sink current			20		uA
I_{SOURCE}	COMP pin source current			20		uA
V_{CCLPH}	COMP pin high clamp voltage			1.6		V
V_{CCLPL}	COMP pin low clamp voltage			0.5		V
G_{mEA}	Error amplifier trans conductance			240		uS
LOGIC INTERFACE						
V_{EN_H}	EN Logic high threshold				0.812	V
V_{EN_L}	EN Logic low threshold		0.36			V
V_{EN_L}	EN threshold hysteresis			120		mV
V_{UVLO}	UVLO rising threshold		0.790	0.813	0.835	V
I_{UVLO_HYS}	Sourcing current at the EN/UVLO pin		1.75	2	2.25	µA
VI_H	ISEL pins Logic high threshold				0.84	V
VI_L	ISEL pins Logic Low threshold		0.36			V
R_{DOWN}	ISEL pins internal pull down resistor			800		kΩ
THERMAL SHUTDOWN						
t_{SD_R}	Thermal shutdown rising threshold	TJ rising		150		°C
t_{SD_F}	Thermal shutdown falling threshold	TJ falling		130		°C

Copyright © 2022 Texas Instruments Incorporated

7.6 Typical Characteristics

TPS61376 Fsw= 1.2 MHz, T_A = 25°C, unless otherwise noted.

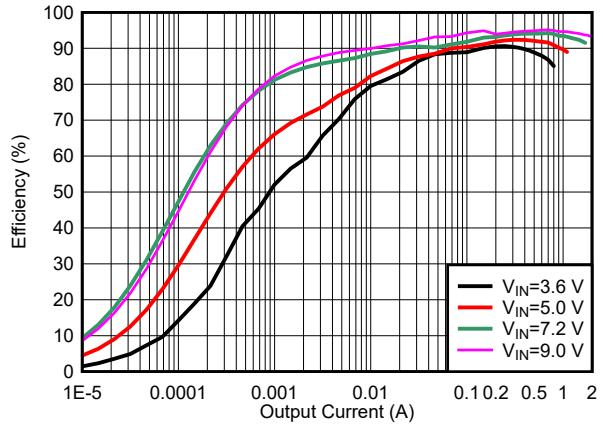

V_{IN} = 3.6 V, 5.0 V, 7.2 V, 9.0 V V_{OUT} = 12 V

Figure 7-1. Efficiency vs Output Current V_{OUT} = 12 V

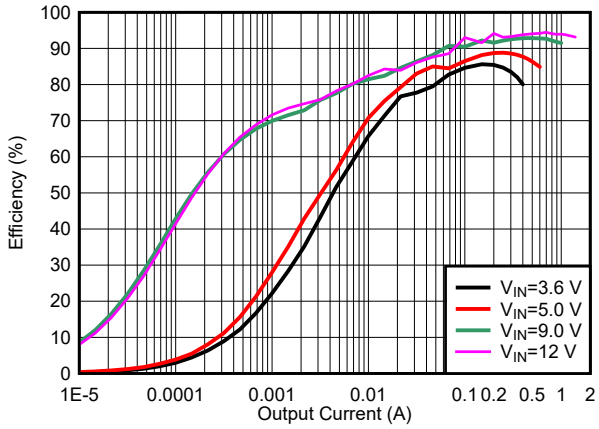

V_{IN} = 3.6 V, 5.0 V, 9.0 V, 12 V V_{OUT} = 24 V

Figure 7-2. Efficiency vs Output Current, V_{OUT} = 24 V

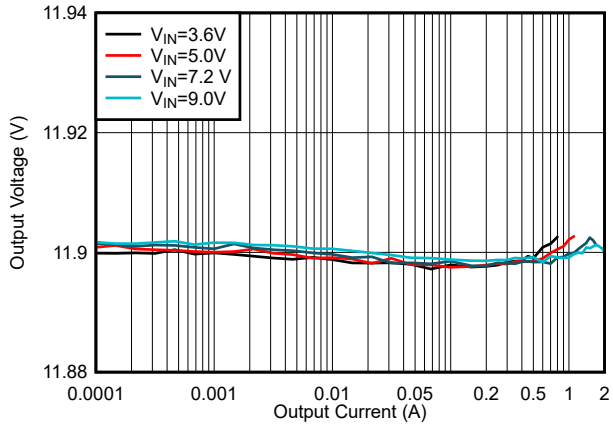

V_{IN} = 3.6 V, 5.0 V, 7.2 V, 9.0 V V_{OUT} = 12 V

Figure 7-3. Load regulation, V_{OUT} = 12 V

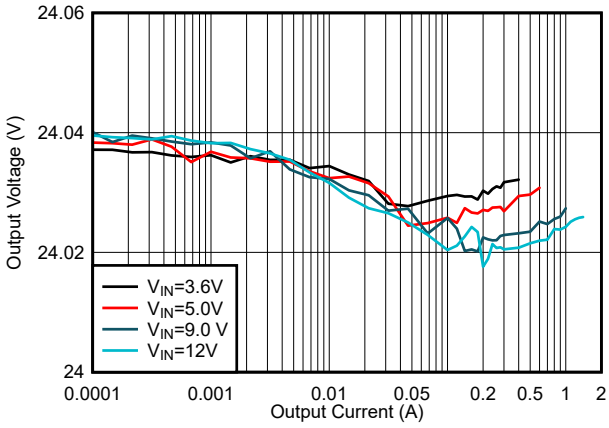

V_{IN} = 3.6 V, 5.0 V, 9.0 V, 12 V V_{OUT} = 24 V

Figure 7-4. Load regulation, V_{OUT} = 24 V

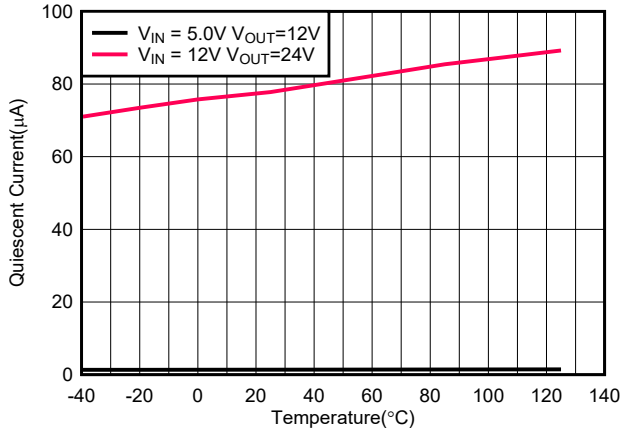

V_{IN} = 5.0 V;12 V V_{OUT} = 12 V;24 V

Figure 7-5. Quiescent Current into VIN vs Temperature

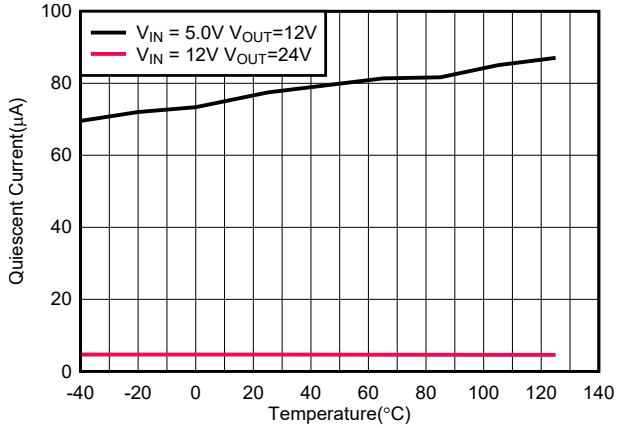

V_{IN} = 5.0 V;12 V V_{OUT} = 12 V;24 V

Figure 7-6. Quiescent Current into VOUT vs Temperature

Copyright © 2022 Texas Instruments Incorporated

7.6 Typical Characteristics (continued)

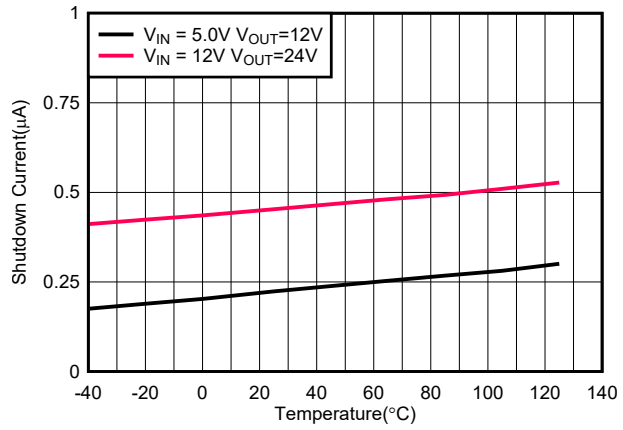

Figure 7-7. Shutdown Current vs Temperature

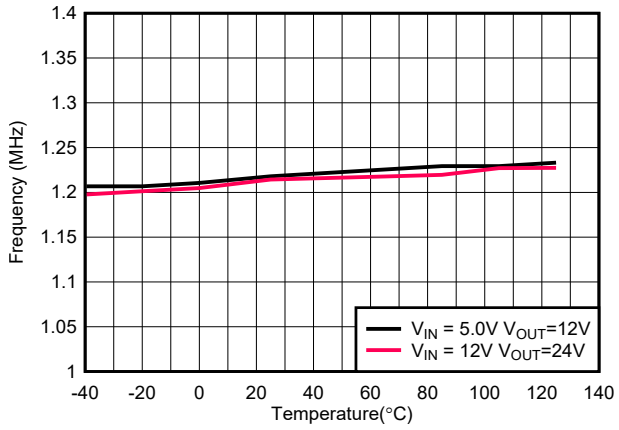

Figure 7-8. Switching Frequency vs Temperature

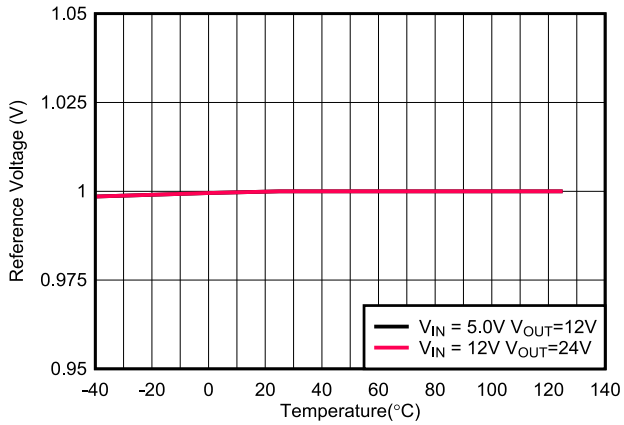

Figure 7-9. Reference Voltage vs Temperature

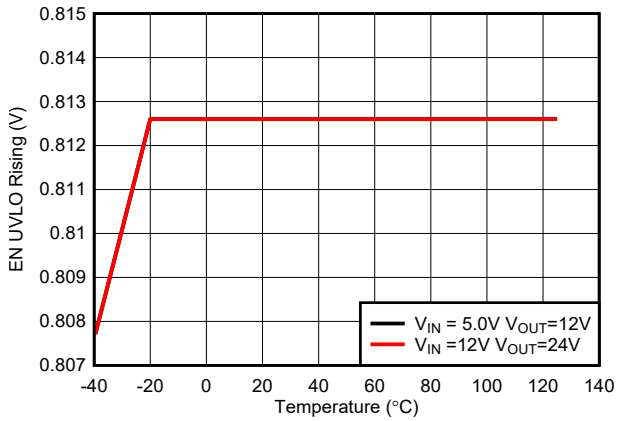

Figure 7-10. EN/UVLO rising Voltage vs Temperature

8 Detailed Description

8.1 Overview

The TPS61376 is a high voltage non-synchronous boost converter with input average current limit and load disconnect functions. The input average current limit threshold can be programmed through the ILIM pin from 0.1 A to 3.0 A. The isolation FET between the VP and SW pin will completely cut off the path between input and output when the device is disabled. The TPS61376 has a wide input voltage range from 2.9 V to 23 V and output voltage covers up to 25 V. The TPS61376 implements the peak current mode with the adaptive off-time control topology. When the ISEL pin is logic high, the peak switching current limit is 4.5 A(typ). When the ISEL pin is logic low, the peak switching current limit will change form 4.5 A(typ) to 2.5 A(typ). The device works in PWM mode at moderate to heavy load conditions. At the light load conditions, the device enters PFM mode to maintain high efficiency over the entire load current range. The TPS61376 also integrates robust protection features including output overvoltage protection, cycle-by-cycle overcurrent protection and thermal shutdown.

8.2 Functional Block Diagram

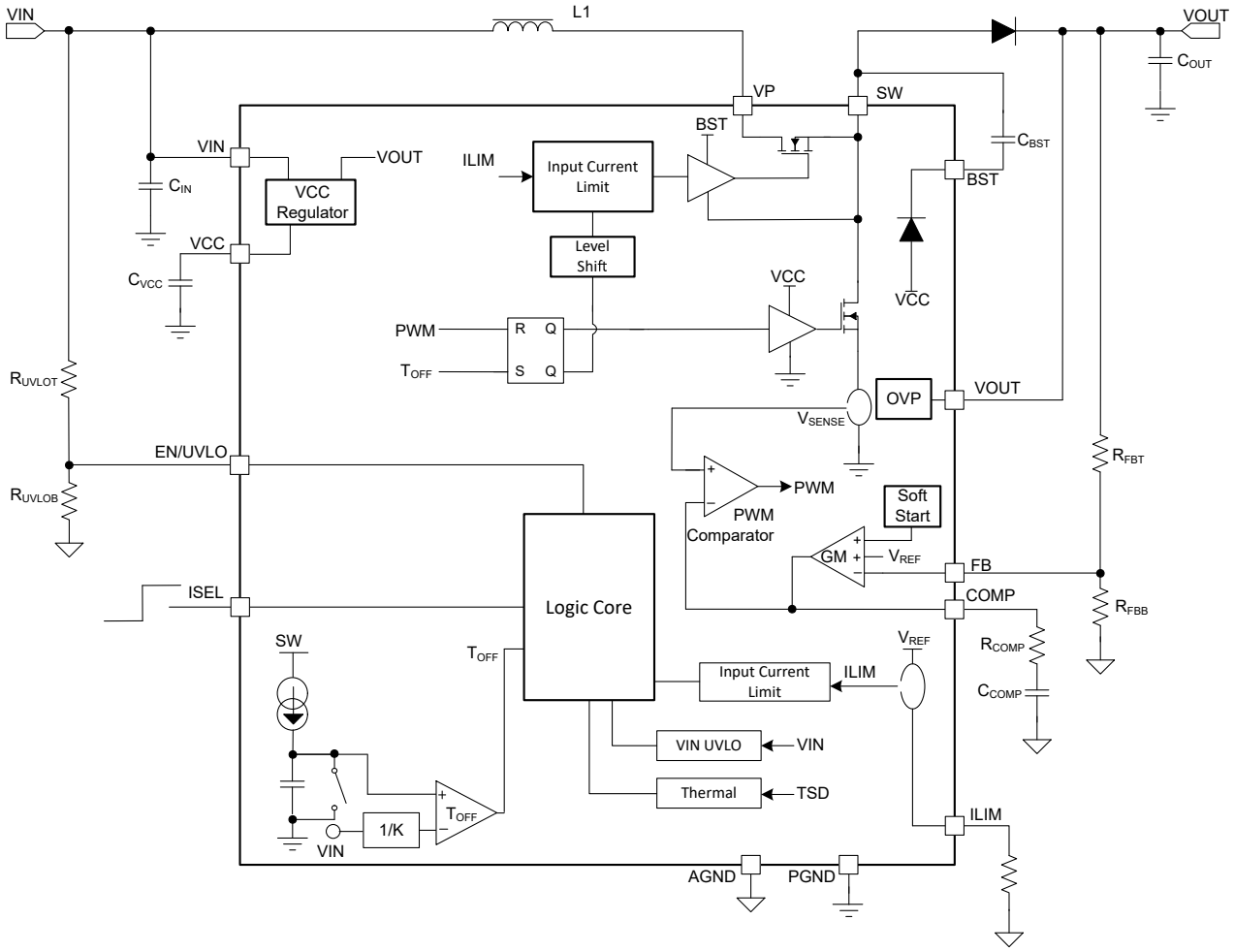

8.3 Feature Description

8.3.1 VCC Power Supply

The internal LDO of TPS61376 outputs a regulated voltage of 4.8 V with 10-mA output current capability. When the input voltage at the VIN pin is below 5.25 V, the internal LDO is powered by the VOUT pin, when the input voltage at the VIN pin is above 5.5 V, the internal LDO is powered by the VIN pin. A ceramic capacitor is connected between the VCC pin and AGND pin to stabilize the VCC voltage and also decouple the noise on the VCC pin. The value of this ceramic capacitor should be above 1 µF. A ceramic capacitor with an X7R or X5R grade dielectric with a voltage rating higher than 10 V is recommended.

Copyright © 2022 Texas Instruments Incorporated

8.3.2 Enable and Programmable UVLO

The TPS61376 has a dual function enable and UVLO circuit. When the input voltage at the VIN pin is above the input UVLO rising threshold of 2.8 V and the EN/UVLO pin is pulled above rising threshold, the TPS61376 is enabled and starts switching. The EN/UVLO pin has an accurate UVLO voltage threshold to support programmable input under-voltage lockout with hysteresis. A hysteresis current I_{UVLO_HYS} is sourced out of the EN/UVLO pin to provide hysteresis that prevents on/off chattering in the presence of input voltage noise. By using resistor divider as shown in Figure 8-1 , the turn on threshold can be calculated by using Equation 1.

$$V_{IN(UVLO_ON)} = V_{UVLO} \times \left(1 + \frac{R1}{R2}\right) \quad (1)$$

where

- V_{UVLO} is the UVLO threshold of 0.813 V at the EN/UVLO pin

The hysteresis between the UVLO turn on threshold and turn off threshold is set by the upper resistor in the EN/UVLO resistor divider and is given by Equation 2

$$\Delta V_{IN(UVLO)} = I_{UVLO_HYS} \times R1 \quad (2)$$

where

- I_{UVLO} is the sourcing current from the EN/UVLO pin when the voltage at the EN/UVLO pin is above V_{UVLO}

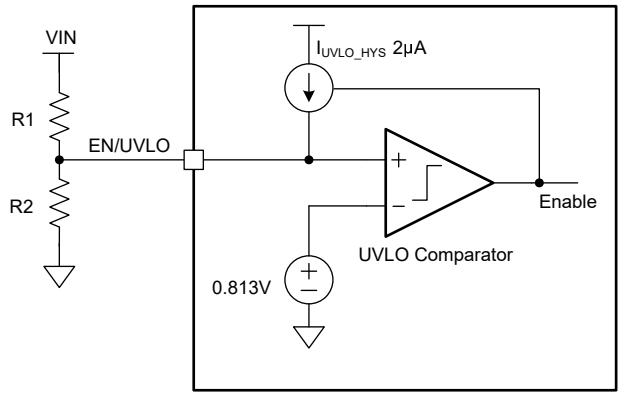

Figure 8-1. Programmable UVLO with Resistor Divider at EN/UVLO Pin

8.3.3 Soft Start and Inrush Current Control During Start-up

The TPS61376 has a soft-start and input average current limit function to prevent high inrush current during start-up. When the EN pin is pulled high, the TPS61376 starts to ramp up the output voltage by ramping an internal reference voltage from 0 V to the reference voltage within typical 4 ms. During start-up when Vin is higher than Vout, the ISO FET between VP and SW pin will limit the current across the inductor. This current will increase linearly as the Vin and Vout delta decreases. When Vout is higher than Vin, TPS61376 will regulate the input average current programmed via ILIM pin.

8.3.4 Switching Frequency

The TPS61376 uses adaptive constant off-time peak current control topology to regulate the output voltage. In moderate to heavy load conditions, the TPS61376 works in pulse width modulation (PWM) mode. The switching frequency in PWM mode is 1.2 MHz (650 KHz for TPS613761). At light load conditions, the TPS61376 works in power-save mode with pulse frequency modulation (PFM). The PFM mode brings high efficiency at the light load.

8.3.5 Adjustable input average Current Limit

The TPS61376 has integrated input average current limit function internally, the average current limit can be set by a resistor from the ILIM pin to AGND. The current limit can be programmed from 0.1 A to 3.0 A. It is recommended to set ISEL pin logic low when setting input average current limit below 750 mA. With ISEL pin

Copyright © 2022 Texas Instruments Incorporated

logic low, TPS61376 will scale the ISO FET to increase the on resistance to improve the input average current accuracy. Meanwhile with ISEL pin logic low, the peak switching current limit will change from 4.5 A(typ) to 2.5 A(typ). The relationship between the input average current limit and the resistor is shown in Equation 3 and Equation 4.

$$I_{LIM} = \frac{43.2K}{R_{LIM}} \text{ with ISEL pin logic high} \quad (3)$$

$$I_{LIM} = \frac{10.8K}{R_{LIM}} \text{ with ISEL pin logic low} \quad (4)$$

where

- R_{LIM} is the resistance between the ILIM pin and the AGND pin.
- I_{LIM} is the input average current limit.

For instance, the input average current limit is 3.0 A if the R_{LIM} is 14.4 kΩ with ISEL pin logic high. This pin cannot be left floating or connected to VCC.

8.3.6 Shut Down and Load Disconnect

When the input voltage is below the UVLO threshold or the EN pin is pulled low, The TPS61376 is in shutdown mode and all the functions are disabled. The TPS61376 integrates a load disconnect function, the ISO FET between the VP and SW pin will completely cut off the path between input and output when the device is disabled.

8.3.7 Overvoltage Protection

If the output voltage at the VOUT pin is detected above 27.5 V (typ), the TPS61376 stops switching immediately until the voltage at the VOUT pin drops the hysteresis value lower than the output overvoltage protection threshold. This function prevents overvoltage on the output and secures the circuits connected to the output from excessive overvoltage.

8.3.8 Thermal Shutdown

A thermal shutdown is implemented to prevent damages due to excessive heat and power dissipation. Typically, the thermal shutdown happens at a junction temperature of 150°C. When the thermal shutdown is triggered, the device stops switching until the junction temperature falls below typically 130°C, then the device starts switching again.

8.4 Device Functional Modes

8.4.1 PWM Mode

The TPS61376 operates at a quasi-constant frequency pulse width modulation (PWM) in moderate to heavy load condition before trigger the input average current limit. Based on the VIN to VOUT ratio, a circuit predicts the required off-time of the switching cycle. At the beginning of each switching cycle, the low-side N-MOSFET switch, shown in Functional Block Diagram, is turned on, and the inductor current ramps up to a peak current that is determined by the output of the internal error amplifier. After the peak current is reached, the current comparator trips, then it turns off the low-side N-MOSFET switch and the inductor current goes through the schottky diode. Because the output voltage is higher than the input voltage, the inductor current decreases. Until the calculated off-time is reached the low-side switch turns on again and the switching cycle is repeated.

8.4.2 Auto PFM Mode

The TPS61376 provides a seamless transition from PWM to PFM operation with smooth on-time/off-time (SOO) mode and enables automatic pulse-skipping mode that provides excellent efficiency over a wide load range. As load current decreasing or VIN rising, the output of the internal error amplifier decreases to lower the inductor peak current, delivering less power to the load. When the output of the error amplifier goes down and reaches a threshold of about 350-mA peak current, the output of the error amplifier is clamped at this value and does not decrease any more, the TPS61376 extends its off-time of the switching period to deliver less energy to the output and regulate the output voltage to the target.

Copyright © 2022 Texas Instruments Incorporated

With SOO mode, the TPS61376 keeps the output voltage equal to the setting voltage in PFM mode. In addition, the output voltage ripple is much smaller at light load due to low peak current. Refer to Figure 8-2.

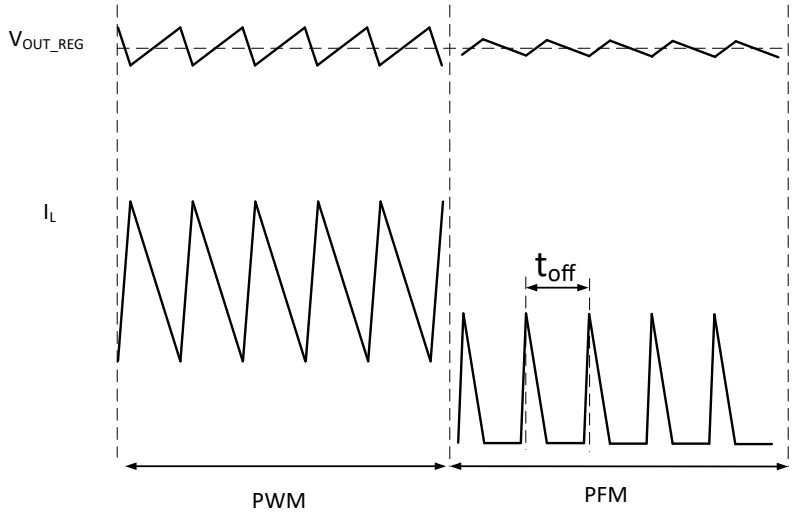

Figure 8-2. Auto PFM Mode Diagram

9 Application and Implementation

Note

Information in the following applications sections is not part of the TI component specification, and TI does not warrant its accuracy or completeness. TI's customers are responsible for determining suitability of components for their purposes, as well as validating and testing their design implementation to confirm system functionality.

9.1 Application Information

The TPS61376 is designed for output voltage up to 25 V with up to 3-A input average current limit. The TPS61376 operates at a quasi-constant frequency pulse-width modulation (PWM) in moderate to heavy load condition. In light load condition, the converter operates in PFM mode. The PFM mode brings high efficiency over the entire load range. The converter uses the adaptive constant off-time peak current control scheme, which provides excellent line and load transient response with minimal output capacitance. The TPS61376 can work with different inductor and output capacitor combinations by adjusting external loop compensation.

9.2 Typical Application

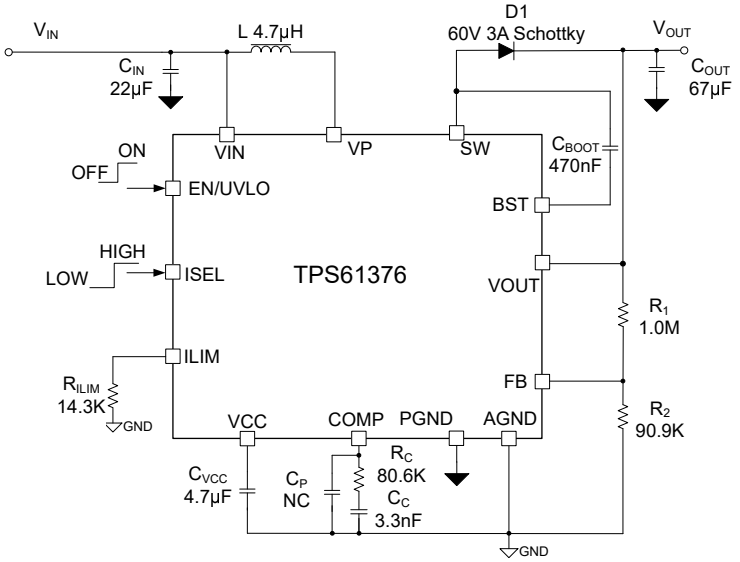

Figure 9-1. TPS61376 3.3-V to 8.4-V V_{IN} ;12V V_{OUT} 0.5-A Output Converter

9.2.1 Design Requirements

Table 9-1. Design Parameters

DESIGN PARAMETERS	EXAMPLE VALUES
Input voltage range	3.3 to 8.4 V
Output voltage	12 V
Output voltage ripple	100 mV peak to peak
Output current rating	0.5 A

Copyright © 2022 Texas Instruments Incorporated

9.2.2 Detailed Design Procedure

9.2.2.1 Setting Output Voltage

The output voltage is set by an external resistor divider (R1, R2 in the Figure 9-1 circuit diagram). For the best accuracy, R2 should be smaller than 500 kΩ to ensure the current flowing through R2 is at least 100 times larger than the FB pin leakage current. Changing R2 to lower value increases the immunity against noise injection. Changing R2 to higher values reduces the quiescent current to achieve higher efficiency at light load.

The value of R1 is then calculated as:

$$R_1 = \frac{(V_{OUT} - V_{REF}) \times R_2}{V_{REF}} \tag{5}$$

9.2.2.2 Inductor Selection

The selection of the inductor affects the steady state of the power supply operation, transient behavior, loop stability, and boost converter efficiency, the inductor is the most important component in switching power regulator design. The three most important specifications to the performance of the inductor are the inductance value, DC resistance, and saturation current.

The TPS61376 is designed to work with inductor values between 2.2 µH and 10 µH. A 2.2-µH inductor is typically available in a smaller or lower-profile package, while a 10-µH inductor produces lower inductor current ripple. If the boost output current is limited by the peak current protection of the IC, using a bigger inductance can maximize the output current capability of the converter.

Inductor values can have ±20% or even ±30% tolerance with 0-A bias current. When the inductor current approaches saturation level, its inductance can decrease 20% to 35% from the value at 0-A bias current, depending on how the inductor vendor defines saturation current. When selecting an inductor, make sure its rated current, especially the saturation current, is larger than boost converter peak current under all operating conditions.

Normally, it is advisable to work with an inductor peak-to-peak current of less than 40% of the average inductor current for maximum output current. Follow Equation 6 to Equation 8 to calculate the average, peak and ripple current of the inductor. To calculate the current in the worst case, use the minimum input voltage, maximum output voltage, and maximum load current of the application. To leave enough design margin, TI recommends using the minimum switching frequency, the inductor value with –30% tolerance, and a low-power conversion efficiency for the calculation.

In a boost regulator, calculate the inductor DC current as in Equation 6.

$$I_{DC} = \frac{V_{OUT} \times I_{OUT}}{V_{IN} \times \eta} \tag{6}$$

where

- V_{OUT} is the output voltage of the boost regulator.
- I_{OUT} is the output current of the boost regulator.
- V_{IN} is the input voltage of the boost regulator.
- η is the power conversion efficiency.

Calculate the inductor current peak-to-peak ripple as in Equation 7.

$$I_{PP} = \frac{1}{L \times \left(\frac{1}{V_{OUT} - V_{IN}} + \frac{1}{V_{IN}}\right) \times f_{SW}} \tag{7}$$

where

- I_{PP} is the inductor peak-to-peak ripple.

- L is the inductor value.
- f_{SW} is the switching frequency.
- V_{OUT} is the output voltage.
- V_{IN} is the input voltage.

Therefore, the peak current, I_{Lpeak}, seen by the inductor is calculated with Equation 8.

$$I_{Lpeak} = I_{DC} + \frac{I_{PP}}{2} \tag{8}$$

With ISEL pin logic high, the peak switching current limit is 4.5 A(typ), when the ISEL pin logic low, the peak switching current limit will change from 4.5 A(typ) to 2.5 A(typ). It is important that the peak current does not exceed the inductor saturation current.

For a given physical inductor size, increasing inductance usually results in an inductor with lower saturation current. The total losses of the coil consists of the DC resistance (DCR) loss and the following frequency-dependent loss:

- The losses in the core material (magnetic hysteresis loss, especially at high switching frequencies)
- Additional losses in the conductor from the skin effect (current displacement at high frequencies)
- Magnetic field losses of the neighboring windings (proximity effect)

For a certain inductor, the larger current ripple (smaller inductor) generates the higher DC and also the frequency-dependent loss. Usually, a data sheet of an inductor does not provide the core loss information. If needed, consult the inductor vendor for detailed information. An inductor with lower DCR is basically recommended for higher efficiency. However, it is usually a tradeoff between the loss and foot print. The table below lists some recommended inductors.

Table 9-2. Recommended Inductors

PART NUMBER	L (µH)	DCR TYP (mΩ)	SATURATION CURRENT (A)	SIZE (L × W × H mm)	VENDOR[(1)]
XGL5050-222ME	2.2	6.8	10.7	5.28 x 5.48 x 5.1	Coilcraft
XGL5050-472ME	4.7	13.9	7.0	5.28 x 5.48 x 5.1	Coilcraft
XGL6060-103ME	10	18.5	7.3	6.51 x 6.71 x 6.1	Coilcraft
XGL4020-222ME	2.2	19.5	6.2	4.0 x 4.0 x 2.1	Coilcraft
XGL4020-472ME	4.7	43	4.1	4.0 x 4.0 x 2.1	Coilcraft
XGL4020-822ME	8.2	71	3.2	4.0 x 4.0 x 2.1	Coilcraft

(1) See the *Third-party Products Disclaimer*.

9.2.2.3 Bootstrap Capacitor Selection

The bootstrap capacitor between the BST and SW pin supplies the gate current to charge the ISO FET device gate during the turn on of each cycle. The gate current also supplies charge for the bootstrap capacitor. The recommended value of the bootstrap capacitor is 0.47 µF to 1 µF. C_{BST} must be a good quality, low-ESR ceramic capacitor located at the pins of the device to minimize potentially damaging voltage transients caused by trace inductance. A value of 0.47 µF was selected for this design example.

9.2.2.4 Input Capacitor Selection

Multilayer ceramic capacitors are an excellent choice for the input decoupling of the step-up converter since they have extremely low ESR and are available in small footprints. Input capacitors must be located as close as possible to the device. While a 22-µF input capacitor or equivalent is sufficient for the most applications, larger values can be used to reduce input current ripple.

Take care when using only ceramic input capacitors. When a ceramic capacitor is used at the input and the power is being supplied through long wires, such as from a wall adapter, a load step at the output can induce ringing at the VIN pin. This ringing can couple to the output and be mistaken as loop instability or can even damage the device. Additional "bulk" capacitance (electrolytic or tantalum) in this circumstance, must be placed

Copyright © 2022 Texas Instruments Incorporated

between C_{IN} and the power source lead to reduce ringing that can occur between the inductance of the power source leads and C_{IN}.

9.2.2.5 Output Capacitor Selection

The output capacitor is mainly selected to meet the requirements at load transient or steady state. The loop is compensated for the output capacitor selected. The output ripple voltage is related to the equivalent series resistance (ESR) of the capacitor and its capacitance. Assuming a capacitor with zero ESR, the minimum capacitance needed for a given ripple can be calculated by Equation 9:

$$C_{OUT} = \frac{I_{OUT} \times (V_{OUT} - V_{IN})}{f_{SW} \times \Delta V \times V_{OUT}} \tag{9}$$

where

- C_{OUT} is the output capacitor
- I_{OUT} is the output current
- V_{OUT} is the output voltage
- V_{IN} is the input voltage
- Δ_V is the output voltage ripple required
- f_{SW} is the switching frequency

The additional output ripple component caused by ESR is calculated by Equation 10:

$$\Delta V_{ESR} = I_{Lpeak} \times R_{ESR} \tag{10}$$

where

- ΔV_{ESR} is the output voltage ripple caused by ESR
- R_{ESR} is the resistor in series with the output capacitor

For the ceramic capacitor, the ESR ripple can be neglected. However, for the tantalum or electrolytic capacitors, it must be considered if used.

The minimum ceramic output capacitance needed to meet a load transient requirement can be estimated using Equation 11:

$$C_{OUT} = \frac{\Delta I_{STEP}}{2\pi \times f_{BW} \times \Delta V_{TRAN}} \tag{11}$$

where

- ΔI_{STEP} is the transient load current step
- ΔV_{TRAN} is the allowed voltage dip for the load current step
- f_{BW} is the control loop bandwidth (that is, the frequency where the control loop gain crosses zero)

Take care when evaluating the derating of a ceramic capacitor under the DC bias. Ceramic capacitors can derate by as much as 70% of the capacitance at the respective rated voltage. Therefore, enough margins on the voltage rating must be considered to ensure adequate capacitance at the required output voltage.

9.2.2.6 Diode Selection

A Schottky diode is the preferred type for D1 due to its low forward voltage drop and small reverse recovery charge. Low reverse leakage current is important parameter when selecting the Schottky diode. The diode must be rated to handle the maximum output voltage plus any switching node ringing. Also, it must be able to handle the average output current.

Copyright © 2022 Texas Instruments Incorporated

9.2.2.7 Loop Stability

The TPS61376 requires external compensation, which allows the loop response to be optimized for each application. The COMP pin is the output of the internal error amplifier. An external compensation network, comprised of resistor R_C, and ceramic capacitors C_C and C_P, is connected to the COMP pin.

The power stage small signal loop response of constant off-time (COT) with peak current control can be modeled by Equation 12.

$$G_{PS}(S)=K_{COMP}\times\frac{R_O\times(1-D)}{2}\times\frac{\left(1+\frac{S}{2\pi f_{ESRZ}}\right)\times\left(1-\frac{S}{2\pi f_{RHPZ}}\right)}{1+\frac{S}{2\pi f_P}} \tag{12}$$

where

- D is the switching duty cycle.
- R_O is the output load resistance.
- K_{COMP} is power stage trans-conductance (inductor peak current / comp voltage), which is 13.5 A/V.

$$f_P=\frac{2}{2\pi\times R_O\times C_O} \tag{13}$$

where

- C_O is effective output capacitance.

$$f_{ESRZ}=\frac{1}{2\pi\times R_{ESR}\times C_O} \tag{14}$$

where

- R_{ESR} is the equivalent series resistance of the output capacitor.

$$f_{RHPZ}=\frac{R_O\times(1-D)^2}{2\pi\times L} \tag{15}$$

The COMP pin is the output of the internal transconductance amplifier. Equation 16 shows the small signal transfer function of compensation network.

$$Gc(S)=\frac{G_{EA}\times R_{EA}\times V_{REF}}{V_{OUT}}\times\frac{\left(1+\frac{S}{2\times\pi\times f_{COMZ}}\right)}{\left(1+\frac{S}{2\times\pi\times f_{COMP1}}\right)\left(1+\frac{S}{2\times\pi\times f_{COMP2}}\right)} \tag{16}$$

where

- G_{EA} is the transconductance of the amplifier, which is 240 uS.
- R_{EA} is the output resistance of the amplifier, which is 100 MΩ.
- V_{REF} is the reference voltage at the FB pin.
- V_{OUT} is the output voltage.
- f_{COMP1}, f_{COMP2} are the frequency of the poles of the compensation network.
- f_{COMZ} is the zero's frequency of the compensation network.

The next step is to choose the loop crossover frequency, f_C. The higher frequency that the loop gain stays above zero before crossing over, the faster the loop response is. It is generally accepted that the loop gain cross

Copyright © 2022 Texas Instruments Incorporated

over no higher than the lower of either 1/10 of the switching frequency, f_{SW}, or 1/5 of the RHPZ frequency, f_{RHPZ}.

Then set the value of R_C, C_C, and C_P (in Figure 9-1) by following these equations.

$$R_C = \frac{2\pi \times V_{OUT} \times C_O \times f_C}{(1-D) \times V_{REF} \times G_{EA} \times K_{COMP}} \tag{17}$$

where

- f_C is the selected crossover frequency.

The value of C_C can be set by Equation 18.

$$C_C = \frac{R_O \times C_O}{2R_C} \tag{18}$$

The value of C_P can be set by Equation 19.

$$C_P = \frac{R_{ESR} \times C_O}{R_C} \tag{19}$$

If the calculated value of C_P is less than 10 pF, it can be left open.

Designing the loop for greater than 45° of phase margin and greater than 10-dB gain margin eliminates output voltage ringing during the line and load transient.

9.2.3 Application Curves

T_A = 25°C, C_{OUT} = 67 µF, ICL = 3.0 A, unless otherwise noted.

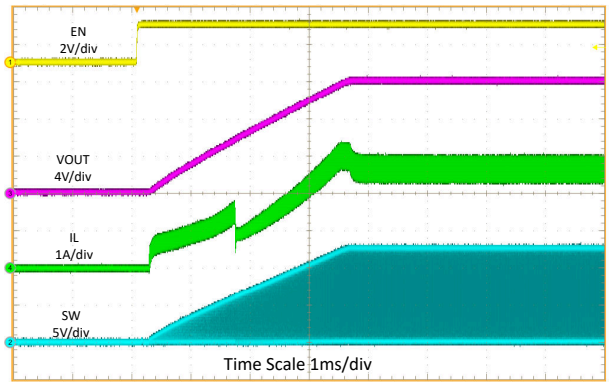

V_{IN} = 5 V V_{OUT} = 12 V R_{LOAD} = 12 Ω

Figure 9-2. Start-Up Waveforms

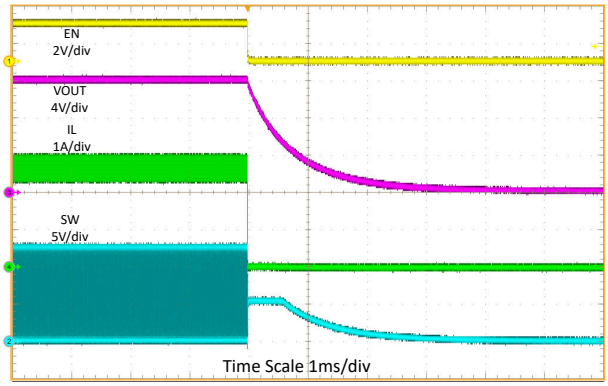

V_{IN} = 5 V V_{OUT} = 12 V R_{LOAD} = 12 Ω

Figure 9-3. Shutdown Waveforms

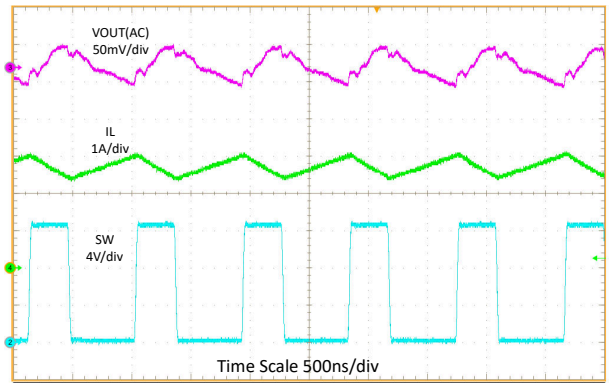

V_{IN} = 5 V V_{OUT} = 12 V I_{OUT} = 1.0 A

Figure 9-4. Switching Waveforms in CCM

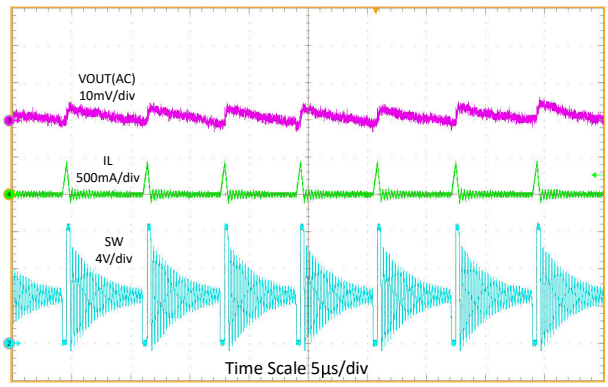

V_{IN} = 5 V V_{OUT} = 12 V I_{OUT} = 50 mA

Figure 9-5. Switching Waveforms in 50-mA Load

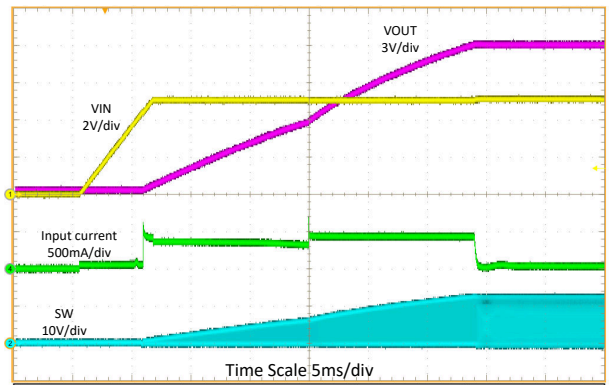

V_{IN} = 5.0 V V_{OUT} = 12 V I_{OUT} = 0 A,C_{OUT} = 540 µF

Figure 9-6. Start-Up with ICL 500-mA

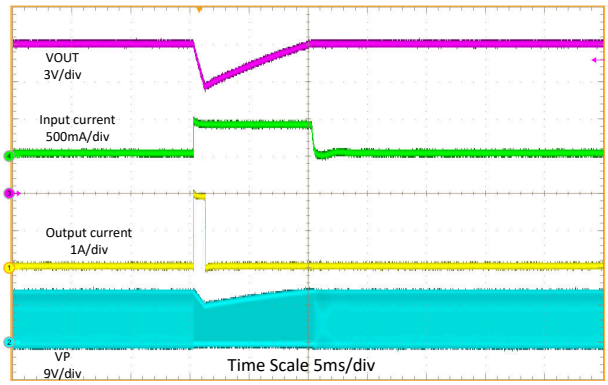

V_{IN} = 5.0 V V_{OUT} = 12 V Load = 0 A to 2 A,C_{OUT} = 540 µF

Figure 9-7. 2-A Load Pulse with ICL 500-mA

Copyright © 2022 Texas Instruments Incorporated

9.2.3 Application Curves (continued)

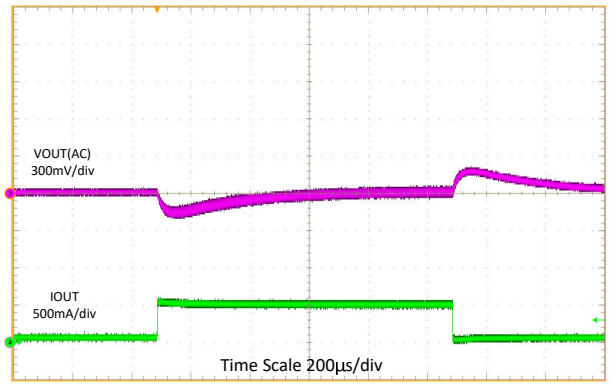

V_{IN} = 3.3 V V_{OUT} = 12 V

Figure 9-8. Load Transient (I_{OUT} = 0.1 to 0.5 A)

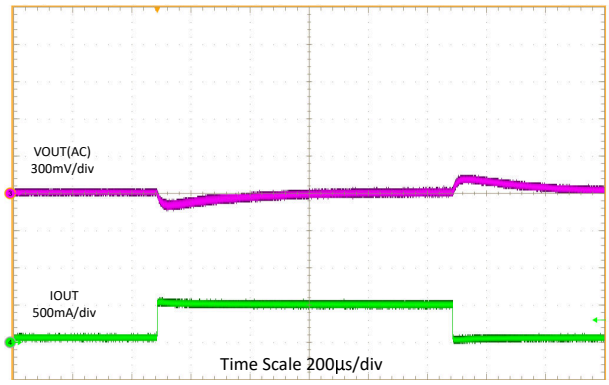

V_{IN} = 8.4 V V_{OUT} = 12 V

Figure 9-9. Load Transient (I_{OUT} = 0.1 to 0.5 A)

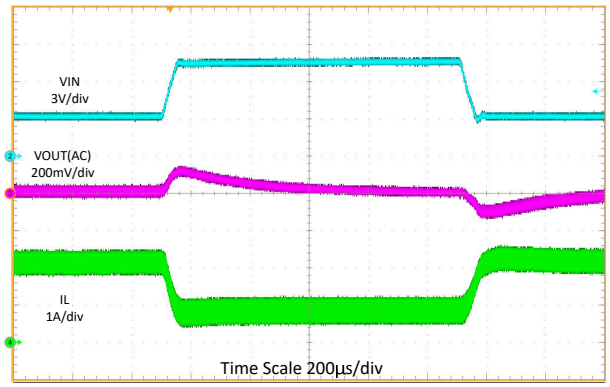

V_{OUT} = 12 V I_{OUT} = 0.5 A

Figure 9-10. Line Transient (V_{IN} = 3.3 V to 8.4 V)

9.3 Power Supply Recommendations

The device is designed to operate from an input voltage supply range between 2.9 V to 23 V. This input supply must be well regulated. If the input supply is located more than a few inches from the converter, additional bulk capacitance can be required in addition to the ceramic bypass capacitors. A typical choice is an electrolytic or tantalum capacitor with a value of 47 µF.

9.4 Layout

9.4.1 Layout Guidelines

As for all switching power supplies, especially those running at high switching frequency and high current, layout is an important design step. If the layout is not carefully done, the regulator can suffer from instability and noise problems. To maximize efficiency, switch rise and fall times are very fast. To prevent radiation of high-frequency noise (for example, EMI), proper layout of the high-frequency switching path is essential. Minimize the length and area of all traces connected to the SW pin, and always use a ground plane under the switching regulator to minimize interplane coupling.

The input capacitor needs to be close to the VIN pin and PGND pin in order to reduce the I_{input} supply ripple.

The power paths of SW, D1,output capacitor and PGND should be as small as possible, in order to reduce parasitic inductance.

The layout should also be done with well consideration of the thermal as this is a high power density device. The VP, SW, VOUT and PGND pins that improves the thermal capabilities of the package should be soldered with the large polygon, using thermal vias underneath the SW pin could improve thermal performance.

Copyright © 2022 Texas Instruments Incorporated

9.4.2 Layout Example

The bottom layer is a large ground plane connected to the PGND plane and AGND plane on top layer by vias.

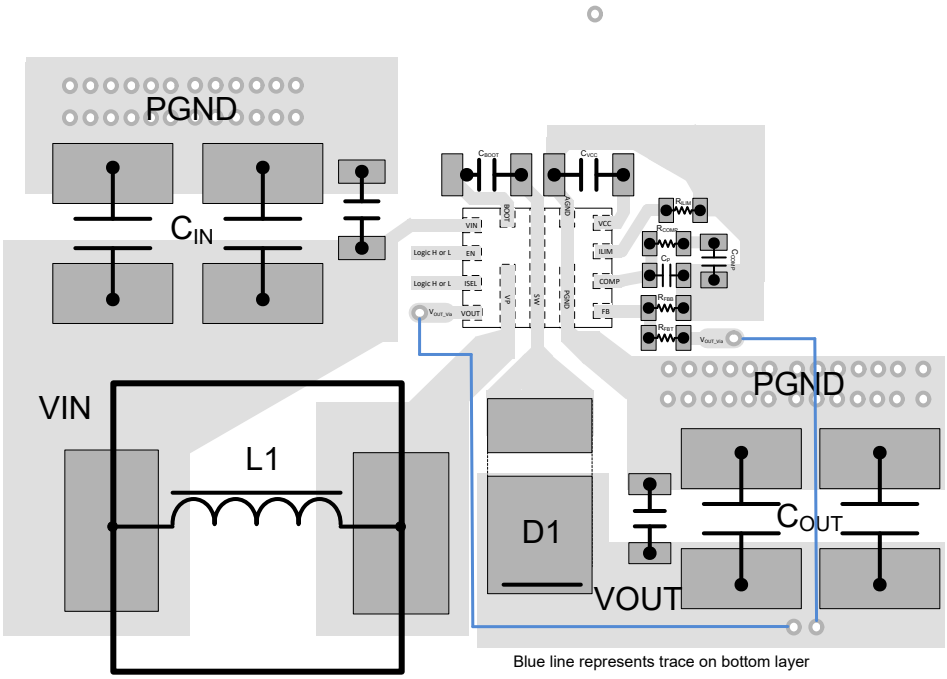

Figure 9-11. Layout Example

Copyright © 2022 Texas Instruments Incorporated

9.4.2.1 Thermal Considerations

The maximum IC junction temperature should be restricted to 125°C under normal operating conditions. Calculate the maximum allowable dissipation, $P_{D(max)}$, and keep the actual power dissipation less than or equal to $P_{D(max)}$. The maximum-power-dissipation limit is determined using Equation 20.

$$P_{D(max)} = \frac{125 - T_A}{R_{\theta JA}} \tag{20}$$

where

- T_A is the maximum ambient temperature for the application.
- $R_{\theta JA}$ is the junction-to-ambient thermal resistance given in the *Thermal Information* table.

The TPS61376 comes in a thermally-enhanced VQFN package. The real junction-to-ambient thermal resistance of the package greatly depends on the PCB type, layout, and thermal pad connection. Using thick PCB copper and soldering the thermal pad to a large ground plate enhance the thermal performance. Using more vias connects the ground plate on the top layer and bottom layer around the IC without solder mask also improves the thermal capability.

Copyright © 2022 Texas Instruments Incorporated

10 Device and Documentation Support

10.1 Device Support

10.1.1 Third-Party Products Disclaimer

TI'S PUBLICATION OF INFORMATION REGARDING THIRD-PARTY PRODUCTS OR SERVICES DOES NOT CONSTITUTE AN ENDORSEMENT REGARDING THE SUITABILITY OF SUCH PRODUCTS OR SERVICES OR A WARRANTY, REPRESENTATION OR ENDORSEMENT OF SUCH PRODUCTS OR SERVICES, EITHER ALONE OR IN COMBINATION WITH ANY TI PRODUCT OR SERVICE.

10.2 Receiving Notification of Documentation Updates

To receive notification of documentation updates, navigate to the device product folder on ti.com. Click on *Subscribe to updates* to register and receive a weekly digest of any product information that has changed. For change details, review the revision history included in any revised document.

10.3 Support Resources

TI E2E™ support forums are an engineer's go-to source for fast, verified answers and design help — straight from the experts. Search existing answers or ask your own question to get the quick design help you need.

Linked content is provided "AS IS" by the respective contributors. They do not constitute TI specifications and do not necessarily reflect TI's views; see TI's Terms of Use.

10.4 Trademarks

HotRod™ and TI E2E™ are trademarks of Texas Instruments.
All trademarks are the property of their respective owners.

10.5 Electrostatic Discharge Caution

This integrated circuit can be damaged by ESD. Texas Instruments recommends that all integrated circuits be handled with appropriate precautions. Failure to observe proper handling and installation procedures can cause damage.

ESD damage can range from subtle performance degradation to complete device failure. Precision integrated circuits may be more susceptible to damage because very small parametric changes could cause the device not to meet its published specifications.

10.6 Glossary

TI Glossary	This glossary lists and explains terms, acronyms, and definitions.

11 Mechanical, Packaging, and Orderable Information

The following pages include mechanical, packaging, and orderable information. This information is the most current data available for the designated devices. This data is subject to change without notice and revision of this document. For browser-based versions of this data sheet, refer to the left-hand navigation.

Copyright © 2022 Texas Instruments Incorporated

PACKAGING INFORMATION

Orderable Device	Status (1)	Package Type	Package Drawing	Pins	Package Qty	Eco Plan (2)	Lead finish/ Ball material (6)	MSL Peak Temp (3)	Op Temp (°C)	Device Marking (4/5)	Samples
TPS61376RYHR	ACTIVE	VQFN-HR	RYH	13	3000	RoHS & Green	NIPDAU	Level-2-260C-1 YEAR	-40 to 125	1376	Samples
XTPS61376RYHR	ACTIVE	VQFN-HR	RYH	13	3000	TBD	Call TI	Call TI	-40 to 125		Samples

(1) The marketing status values are defined as follows:
ACTIVE: Product device recommended for new designs.
LIFEBUY: TI has announced that the device will be discontinued, and a lifetime-buy period is in effect.
NRND: Not recommended for new designs. Device is in production to support existing customers, but TI does not recommend using this part in a new design.
PREVIEW: Device has been announced but is not in production. Samples may or may not be available.
OBSOLETE: TI has discontinued the production of the device.

(2) **RoHS:** TI defines "RoHS" to mean semiconductor products that are compliant with the current EU RoHS requirements for all 10 RoHS substances, including the requirement that RoHS substance do not exceed 0.1% by weight in homogeneous materials. Where designed to be soldered at high temperatures, "RoHS" products are suitable for use in specified lead-free processes. TI may reference these types of products as "Pb-Free".
RoHS Exempt: TI defines "RoHS Exempt" to mean products that contain lead but are compliant with EU RoHS pursuant to a specific EU RoHS exemption.
Green: TI defines "Green" to mean the content of Chlorine (Cl) and Bromine (Br) based flame retardants meet JS709B low halogen requirements of <=1000ppm threshold. Antimony trioxide based flame retardants must also meet the <=1000ppm threshold requirement.

(3) MSL, Peak Temp. - The Moisture Sensitivity Level rating according to the JEDEC industry standard classifications, and peak solder temperature.

(4) There may be additional marking, which relates to the logo, the lot trace code information, or the environmental category on the device.

(5) Multiple Device Markings will be inside parentheses. Only one Device Marking contained in parentheses and separated by a "~" will appear on a device. If a line is indented then it is a continuation of the previous line and the two combined represent the entire Device Marking for that device.

(6) Lead finish/Ball material - Orderable Devices may have multiple material finish options. Finish options are separated by a vertical ruled line. Lead finish/Ball material values may wrap to two lines if the finish value exceeds the maximum column width.

Important Information and Disclaimer: The information provided on this page represents TI's knowledge and belief as of the date that it is provided. TI bases its knowledge and belief on information provided by third parties, and makes no representation or warranty as to the accuracy of such information. Efforts are underway to better integrate information from third parties. TI has taken and continues to take reasonable steps to provide representative and accurate information but may not have conducted destructive testing or chemical analysis on incoming materials and chemicals. TI and TI suppliers consider certain information to be proprietary, and thus CAS numbers and other limited information may not be available for release.

In no event shall TI's liability arising out of such information exceed the total purchase price of the TI part(s) at issue in this document sold by TI to Customer on an annual basis.

IMPORTANT NOTICE AND DISCLAIMER

TI PROVIDES TECHNICAL AND RELIABILITY DATA (INCLUDING DATA SHEETS), DESIGN RESOURCES (INCLUDING REFERENCE DESIGNS), APPLICATION OR OTHER DESIGN ADVICE, WEB TOOLS, SAFETY INFORMATION, AND OTHER RESOURCES “AS IS” AND WITH ALL FAULTS, AND DISCLAIMS ALL WARRANTIES, EXPRESS AND IMPLIED, INCLUDING WITHOUT LIMITATION ANY IMPLIED WARRANTIES OF MERCHANTABILITY, FITNESS FOR A PARTICULAR PURPOSE OR NON-INFRINGEMENT OF THIRD PARTY INTELLECTUAL PROPERTY RIGHTS.

These resources are intended for skilled developers designing with TI products. You are solely responsible for (1) selecting the appropriate TI products for your application, (2) designing, validating and testing your application, and (3) ensuring your application meets applicable standards, and any other safety, security, regulatory or other requirements.

These resources are subject to change without notice. TI grants you permission to use these resources only for development of an application that uses the TI products described in the resource. Other reproduction and display of these resources is prohibited. No license is granted to any other TI intellectual property right or to any third party intellectual property right. TI disclaims responsibility for, and you will fully indemnify TI and its representatives against, any claims, damages, costs, losses, and liabilities arising out of your use of these resources.

TI’s products are provided subject to TI’s Terms of Sale or other applicable terms available either on ti.com or provided in conjunction with such TI products. TI’s provision of these resources does not expand or otherwise alter TI’s applicable warranties or warranty disclaimers for TI products.

TI objects to and rejects any additional or different terms you may have proposed.

Mailing Address: Texas Instruments, Post Office Box 655303, Dallas, Texas 75265
Copyright © 2022, Texas Instruments Incorporated