ISL68127

Digital Dual Output, 7-Phase Configurable, PWM Controller with PMBus

FN8748
Rev.1.00
Jun 26, 2017

The ISL68127 is a digital dual output, flexible multiphase (X+Y ≤ 7) PWM controller supporting the latest PMBus 1.3 specifications. Either of the outputs can be configured to support any desired phase assignments up to a maximum of seven phases across the two outputs (X+Y). For example, 6+1, 5+2, 4+2, 3+3, 3+2, or even a single output operation as a 7+0 configuration are supported. The ISL68127 uses Intersil's proprietary linear synthetic digital current modulation scheme to achieve the industry's best combination of transient response and ease of tuning while addressing the challenges of modern multiphase designs.

Device configuration and telemetry monitoring is accomplished using Intersil's intuitive PowerNavigator GUI. The ISL68127 device supports on-chip nonvolatile memory to store various configuration settings that are user-selectable through pin-strap, giving system designers increased power density to configure and deploy multiple configurations. The device supports an automatic phase add/drop feature to allow maximum efficiency across all load ranges. Thresholds for automatic phase add/drop are user-programmable using the powerful PowerNavigator GUI.

The ISL68127 supports a comprehensive fault management system to enable the design of highly reliable systems. From a multitiered overcurrent protection scheme, to the configurable power-good and output overvoltage/undervoltage fault thresholds and temperature monitoring, almost any need is accommodated.

With minimal external components, easy configuration, robust fault management, and highly accurate regulation capability, implementing a high-performance, multiphase regulator has never been easier.

Applications

- Networking equipment
- Telecom and datacom equipment
- Server and storage equipment
- Point-of-load power supply (Memory, DSP, ASIC, FPGA)

Features

- Advanced linear digital modulation scheme
  - Zero latency synthetic current control for excellent HF current balance
  - Dual edge modulation for fastest transient response
- Auto phase add/drop for excellent load vs efficiency profile
- PMBus 1.3 support
  - Telemetry - V_{IN}, V_{OUT}, I_{OUT}, power IN/OUT, temperature, and various fault status registers
  - Up to 1MHz bus interface
- Flexible phase configuration
  - 7+0, 6+1, 5+2, 4+3 phase operation
  - Operation using less than seven phases between two outputs is also supported
- Diode braking for overshoot reduction
- Differential remote voltage sensing supports ±0.5% closed loop system accuracy over load, line, and temperature
- Highly accurate current sensing for excellent load line regulation and accurate OCP
  - Supports the ISL99227 60A smart power stage
  - Supports DCR sense with integrated temperature compensation
- Comprehensive fault management enables high reliability systems
  - Pulse-by-pulse phase current limiting
  - Total output current protection
  - Output and input OV/UV
  - Open voltage sense detect
  - Black box recording capability for faults
- Intuitive configuration using the PowerNavigator GUI
  - NVM to store up to eight configurations
- Pb-free (RoHS compliant)

Related Literature

- For a full list of related documents, visit our web page
  - ISL68127 product page

Table of Contents

Ordering Information . . . 3
Pin Configuration . . . 3
Functional Pin Descriptions . . . 4
Driver, DrMOS, and Smart Power Stage Recommendation . . . 4
Internal Block Diagram . . . 5
Typical Application: 6+1 Configuration with ISL99227 SPS . . . 6
Typical Application: 4+3 Configuration with ISL99227 SPS . . . 7
Typical Application: 5+2 Configuration with DCR Sensing . . . 8
Typical Application: Phase Doubler 14-Phase VR with ISL6617A+SPS . . . 9
Absolute Maximum Ratings . . . 10
Thermal Information . . . 10
Recommended Operating Conditions . . . 10
Electrical Specifications . . . 10
Typical Performance Curves . . . 12
Functional Description . . . 12
Overview . . . 12
PWM Modulation Scheme . . . 12
PMBus Address Selection . . . 12
Phase Configuration . . . 12
Automatic Phase Add and Drop . . . 13
Output Voltage Configuration . . . 13
Switching Frequency . . . 13
Current Sensing . . . 13
Temperature Sensing . . . 15
Temperature Compensation . . . 15
Lossless Input Current and Power Sensing . . . 16
Voltage Regulation . . . 16
Current Feedback . . . 16
Power-On Reset (POR) . . . 16
Soft-Start Delay and Ramp Times . . . 16
Stored Configuration Selection . . . 16
Fault Monitoring and Protection . . . 17
Power-Good Signals . . . 17
Output Voltage Protection . . . 17
Output Current Protection . . . 17
Smart Power Stage OC Fault Detect . . . 18
Thermal Monitoring and Protection . . . 18
Layout and Design Considerations . . . 19
PMBus Operation . . . 20
PMBus Protocol . . . 21
PMBus Command Summary . . . 22
PMBus Use Guidelines . . . 23
PMBus Data Formats . . . 23
PMBus Command Detail . . . 24
Revision History . . . 46
About Intersil . . . 46
Package Outline Drawing . . . 47

Ordering Information

PART NUMBER (Notes 1, 2, 3)	PART MARKING	TEMP. RANGE (°C)	PACKAGE (RoHS COMPLIANT)	PKG. DWG. #
ISL68127IRAZ	ISL68127 IRZ	-40 to +85	48 Ld 6x6 QFN	L48.6x6B

NOTES:

1. Add "-T" suffix for 4k unit or "-T7A" suffix for 250 unit tape and reel options. Refer to TB347 for details on reel specifications.
2. These Intersil Pb-free plastic packaged products employ special Pb-free material sets, molding compounds/die attach materials and 100% matte tin plate plus anneal (e3 termination finish, which is RoHS compliant and compatible with both SnPb and Pb-free soldering operations). Intersil Pb-free products are MSL classified at Pb-free peak reflow temperatures that meet or exceed the Pb-free requirements of IPC/JEDEC J STD-020.
3. For Moisture Sensitivity Level (MSL), see product information page for ISL68127. For more information on MSL, see techbrief TB363.

TABLE 1. KEY DIFFERENCES BETWEEN FAMILY OF PARTS

PART NUMBER	PHASE CONFIGURATION OUTPUT X/OUTPUT Y	SPECIFICATION SUPPORTED	PACKAGE
ISL68137	X+Y ≤ 7	PMBus/AVSBus	QFN 48 Ld, 6x6mm
ISL68134	X+Y ≤ 4	PMBus/AVSBus	TQFN 40 Ld, 5x5mm
ISL68127	X+Y ≤ 7	PMBus	QFN 48 Ld, 6x6mm
ISL68124	X+Y ≤ 4	PMBus	TQFN 40 Ld, 5x5mm

Pin Configuration

ISL68127
(48 LD QFN)
TOP VIEW

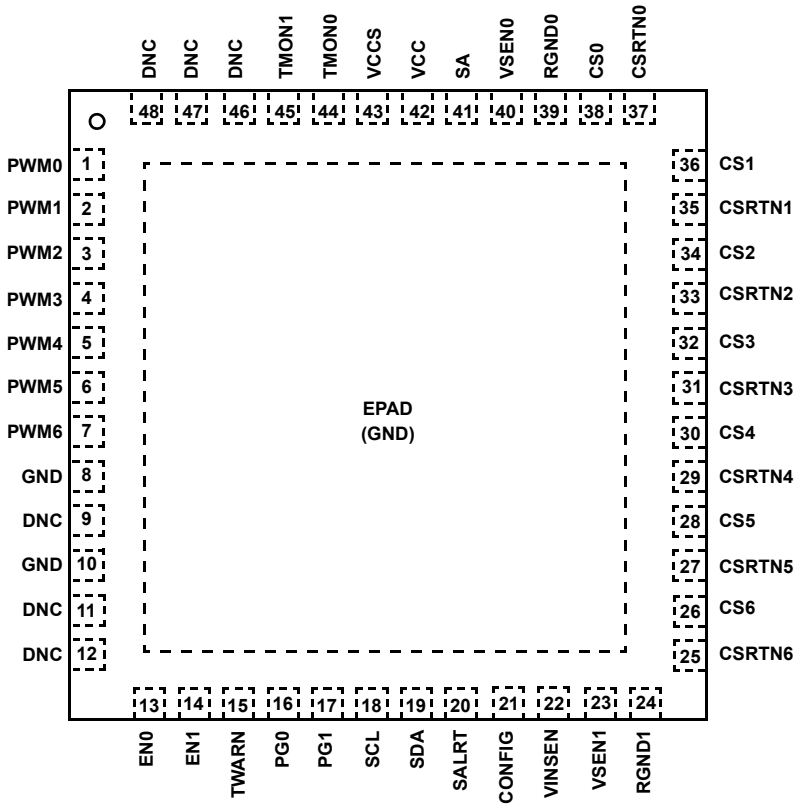

Functional Pin Descriptions

Refer to Table 4 on page 19 for design layout considerations.

PIN NUMBER	PIN NAME	DESCRIPTION
7, 6, 5, 4, 3, 2, 1	PWM[6:0]	Pulse width modulation outputs. Connect these pins to the PWM input pins of 3.3V logic-compatible Intersil smart power stages, driver IC(s), or power stages.
8, 10	GND	Ground pins. Connect directly to system GND plane.
9, 11, 12, 46, 47, 48	DNC	Do not connect any signals to these pins.
13	EN0	Input pin used for enable control of Output 0. Active high. Connect to ground if not used.
14	EN1	Input pin used for enable control of Output 1. Active high. Connect to ground if not used.
15	TWARN	Thermal warning flag. This open-drain output will be pulled low in the event of a sensed over-temperature at TMON pins without disabling the regulators. Maximum pull-up voltage is V_{CC}.
16	PG0	Open-drain, power-good indicators for Output 0. Maximum pull-up voltage is V_{CC}.
17	PG1	Open-drain, power-good indicators for Output 1. Maximum pull-up voltage is V_{CC}.
18	SCL	Serial clock signal pin for SMBus interface. Maximum pull-up voltage is V_{CC}.
19	SDA	Serial data signal pin for SMBus interface. Maximum pull-up voltage is V_{CC}.
20	SALRT	Serial alert signal pin for SMBus interface. Maximum pull-up voltage is V_{CC}.
21	CONFIG	Configuration ID selection pin. See Table 3 on page 16 for more details.
22	VINSEN	Input voltage sense pin. Connect to VIN through a resistor divider (typically 402k/10k) with a 10nF decoupling capacitor.
23	VSEN1	Positive differential voltage sense input for Output 1. Connect to positive remote sensing point. Connect to ground if not used.
24	RGND1	Negative differential voltage sense input for Output 1. Connect to negative remote sensing point. Connect to ground if not used.
25, 27, 29, 31, 33, 35, 37	CSRTN[6:0]	The CS and CSRTN pins are current sense inputs to individual phase differential amplifiers. Unused phases should have their respective current sense inputs grounded. The ISL68127 supports smart power stage, DCR, and resistor sensing. Connection details depend on the current sense method chosen.
26, 28, 30, 32, 34, 36, 38	CS[6:0]	
39	RGND0	Negative differential voltage sense input for Output 0. Connect to negative remote sensing point. Connect to ground if not used.
40	VSEN0	Positive differential voltage sense input for for Output 0. Connect to positive remote sensing point. Connect to ground if not used.
41	SA	PMBus address selection pin. See Table 2 on page 12 for more details.
42	VCC	Chip primary bias input. Connect this pin directly to a +3.3V supply with a high quality MLCC bypass capacitor.
43	VCCS	Internally generated 1.2V LDO logic supply from VCC. Decouple with 4.7µF or greater MLCC (X5R or better).
44	TMON0	Input pin for external temperature measurement at Output 0. Supports diode based temperature sensing as well as smart power stage sensing. Refer to "Temperature Compensation" on page 15 for more information.
45	TMON1	Input pin for external temperature measurement at Output 1. Supports diode based temperature sensing as well as smart power stage sensing. Refer to "Temperature Compensation" on page 15 for more information.
EPAD	GND	Package pad serves as GND return for all chip functions. Connect directly to system GND plane with multiple thermal vias.

Driver, DrMOS, and Smart Power Stage Recommendation

INTERSIL PART NUMBER	QUIESCENT CURRENT (mA)	GATE DRIVE VOLTAGE (V)	NUMBER OF DRIVERS	COMMENTS
ISL99227	4.85	5	Single	60A, 5x5 smart power stage
ISL99140	0.19	5	Single	40A, 6x6 DrMOS
ISL6596	0.19	5	Single	Connect ISL6596 VCTRL to 3.3V
ISL6617A	5	N/A	N/A	Phase Doubler with 5V PWM output to be compatible with 60A DrMOS or with 60A smart power stage. Supports up to a 14-phase design.

Internal Block Diagram

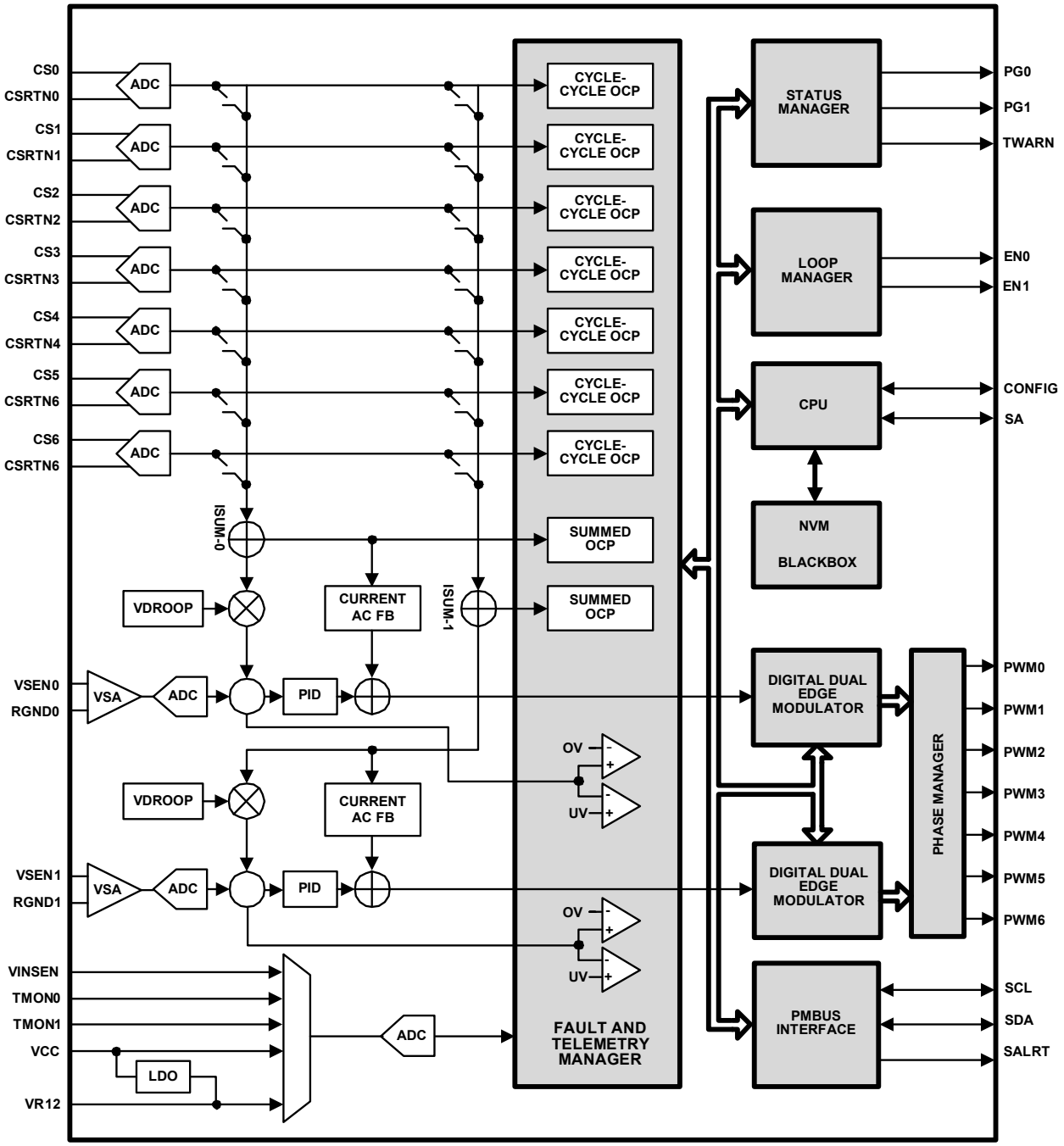

FIGURE 1. INTERNAL BLOCK DIAGRAM

Typical Application: 6+1 Configuration with ISL99227 SPS

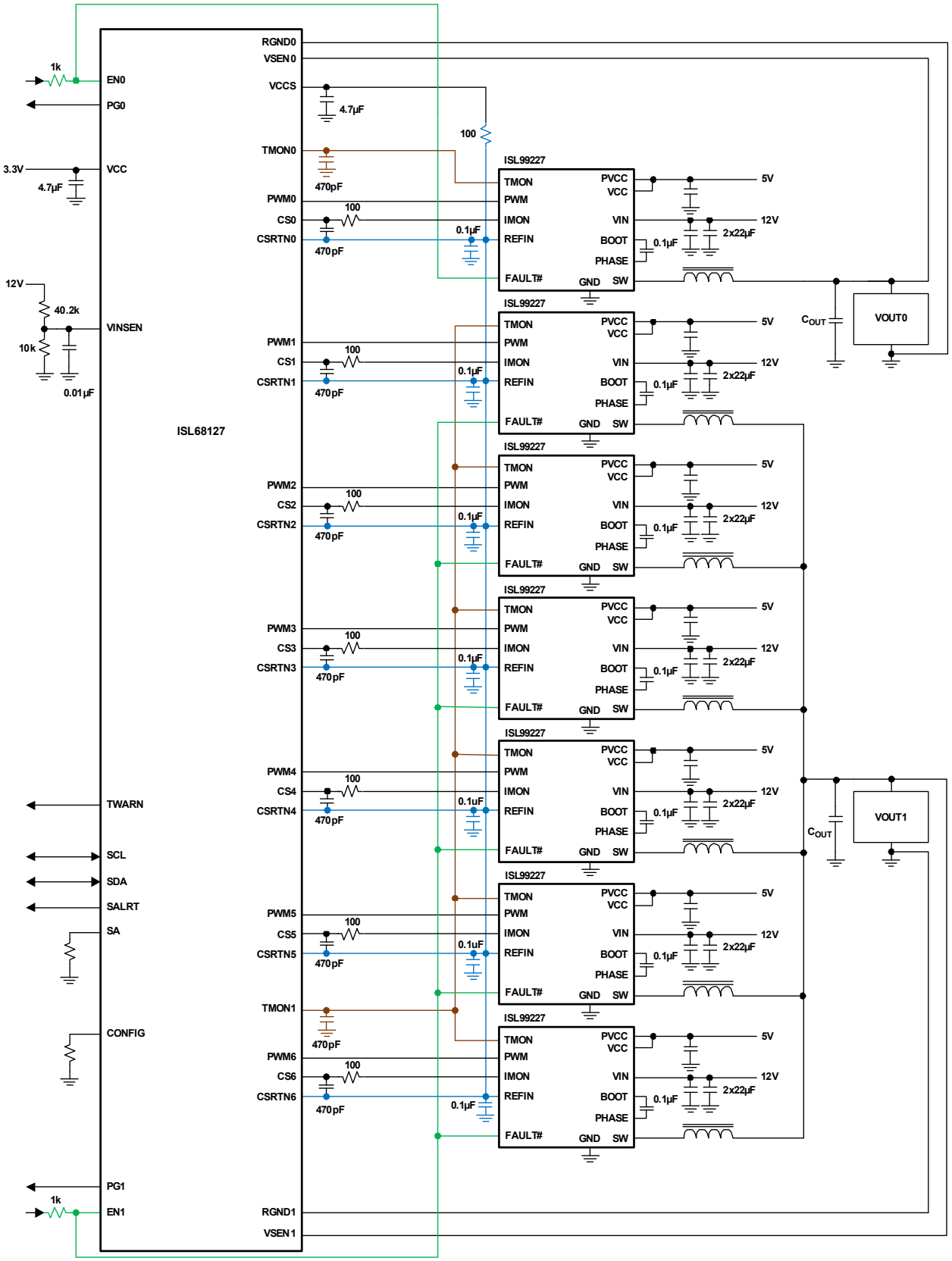

FIGURE 2. TYPICAL APPLICATION: 6+1 CONFIGURATION WITH ISL99227 SPS

Typical Application: 4+3 Configuration with ISL99227 SPS

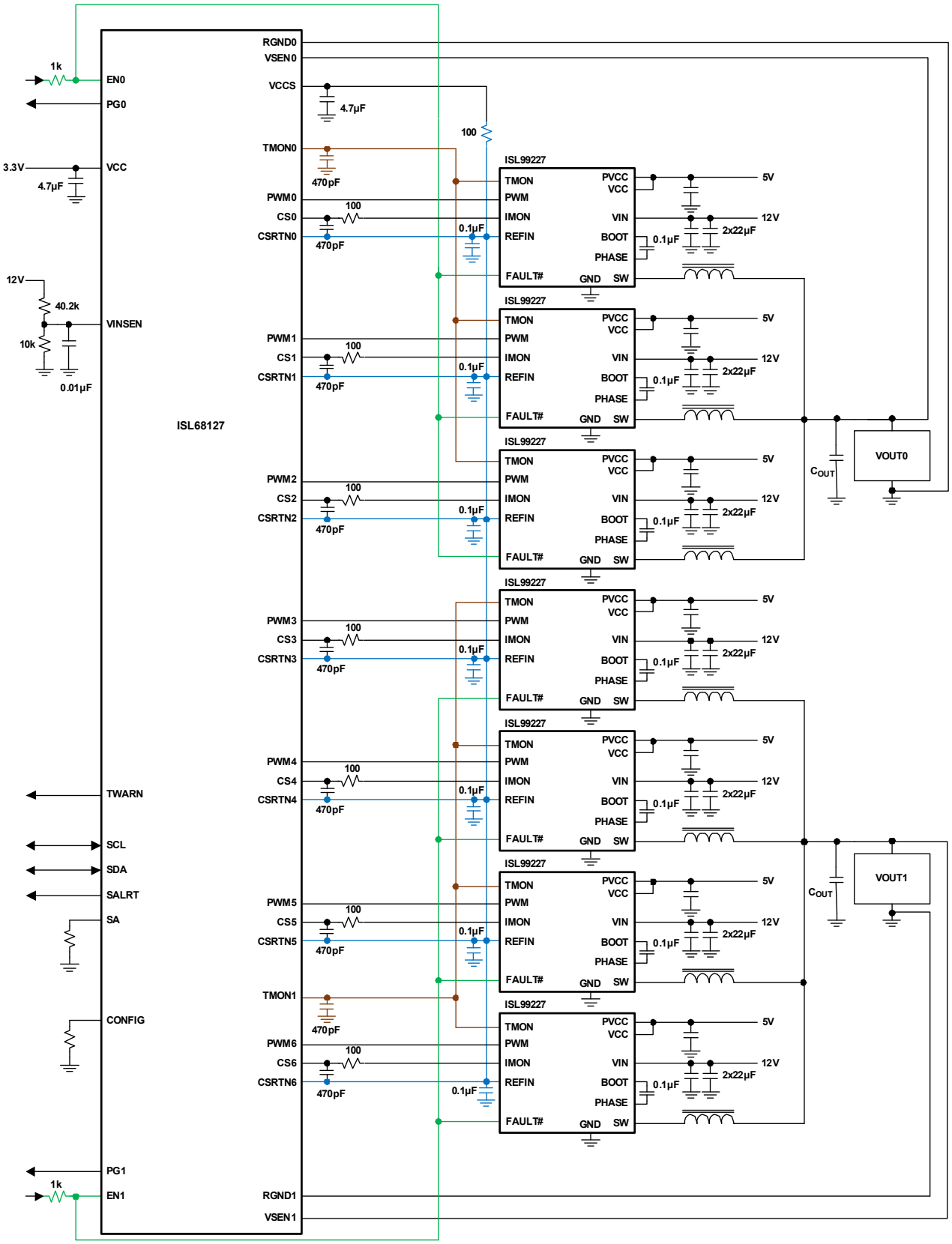

FIGURE 3. TYPICAL APPLICATION: 4+3 CONFIGURATION WITH ISL99227 SPS

Typical Application: 5+2 Configuration with DCR Sensing

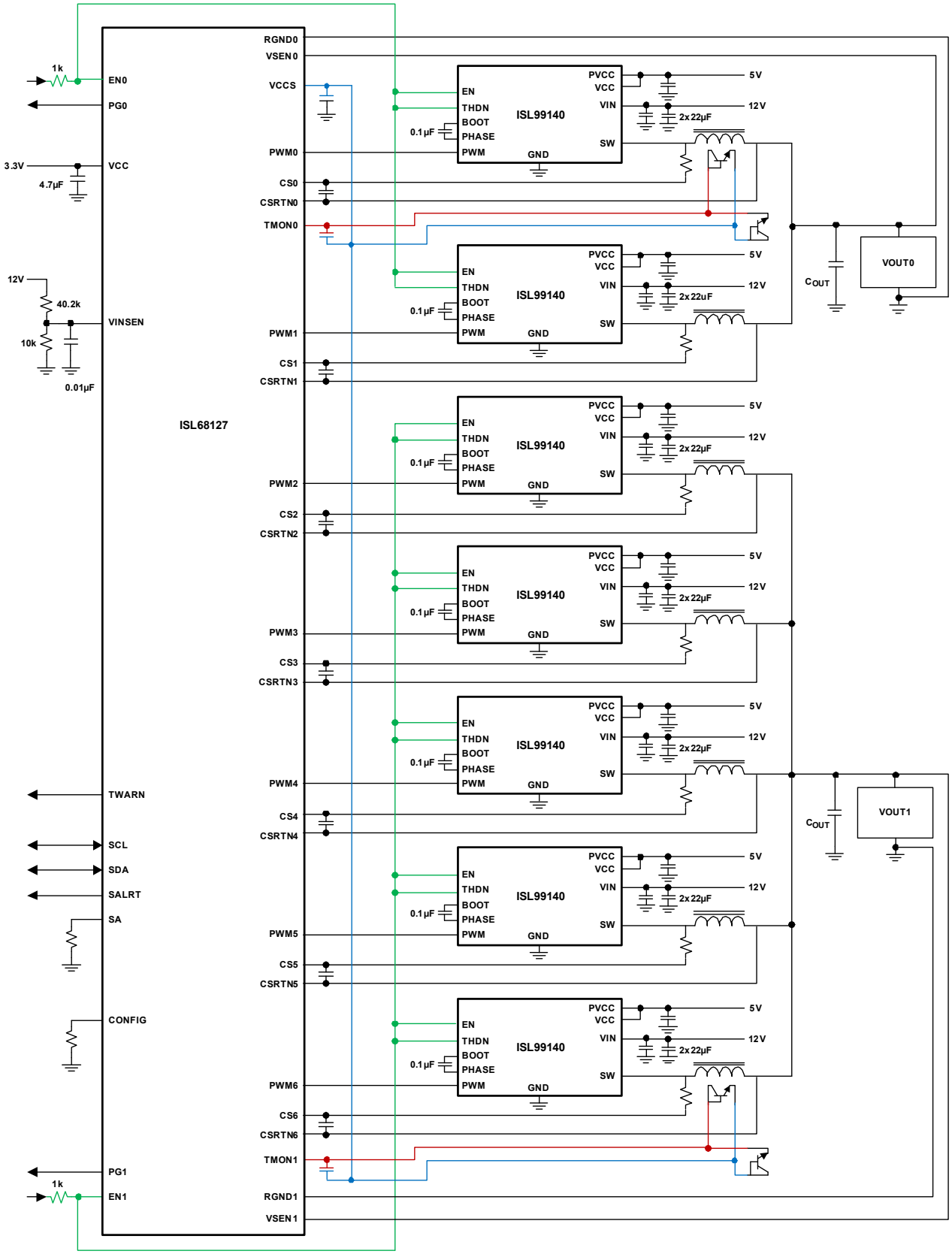

FIGURE 4. TYPICAL APPLICATION: 5+2 CONFIGURATION WITH DCR SENSING

Typical Application: Phase Doubler 14-Phase VR with ISL6617A+SPS

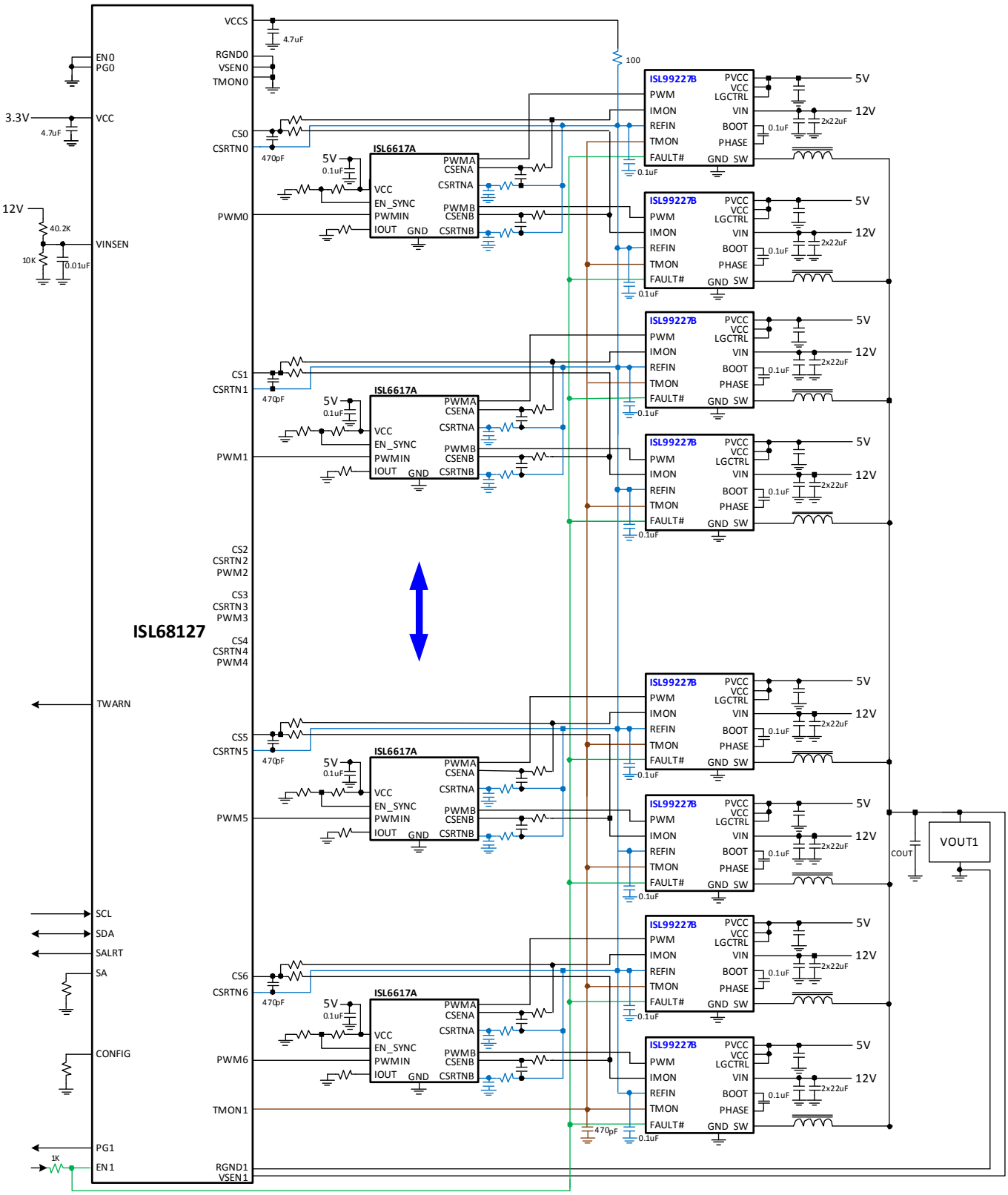

FIGURE 5. PHASE DOUBLER 14-PHASE VR WITH ISL6617A+SMART POWER STAGE

Absolute Maximum Ratings

VCC . . . . . +4.3V
VCCS . . . . . +1.6V
All Other Pins . . . . . (GND - 0.3V) to VCC + 0.3V
ESD Rating:
Human Body Model (Tested per JS-001-2014) 2kV
Charged Device Model (Tested per JS-001-2014) 1kV
Latch-Up (Tested per JESD-78D; Class 2, Level A) 100mA

Thermal Information

Thermal Resistance (Notes 4, 5)	θ_{JA} (°C/W)	θ_{JC} (°C/W)
48 Ld 6x6 QFN Package	27	1

Maximum Junction Temperature . . . . . +150°C
Maximum Storage Temperature Range . . . . . -65°C to +150°C
Pb-Free Reflow Profile . . . . . see TB493

Recommended Operating Conditions

Supply Voltage, V_{CC} . . . . . +3.3V ±5%
Ambient Temperature . . . . . -40°C to +85°C
Output Voltage . . . . . 0V to 3.05V

CAUTION: Do not operate at or near the maximum ratings listed for extended periods of time. Exposure to such conditions may adversely impact product reliability and result in failures not covered by warranty.

NOTES:

4. θ_{JA} is measured in free air with the component mounted on a high-effective thermal conductivity test board with "direct attach" features. See TB379.
5. For θ_{JC}, the "case temp" location is the center of the exposed metal pad on the package underside.

Electrical Specifications

Recommended operating conditions, V_{CC} = 3.3V, unless otherwise specified. **Boldface limits apply across the operating temperature range -40°C to +85°C.**

PARAMETER	TEST CONDITIONS	MIN (Note 7)	TYP	MAX (Note 7)	UNIT
V_{CC} SUPPLY CURRENT					
Nominal Supply Current	V_{CC} = 3.3VDC; EN1/2 = V_{IH}, f_{SW} = 400kHz		90.5		mA
Shutdown Supply Current	V_{CC} = 3.3VDC; EN1/2 = 0V, no switching		11.4		mA
VCCS LDO SUPPLY					
Output Voltage		**1.20**	1.25	**1.30**	V
Maximum Current Capability	Excluding internal load	**50**			mA
POWER-ON RESET AND INPUT VOLTAGE LOCKOUT					
V_{CC} Rising POR Threshold			2.7	**2.9**	V
V_{CC} Falling POR Threshold		**1.0**			V
Enable (EN0 and EN1) Input High Level		**2.55**			V
Enable (EN0 and EN1) Input Low Level				**0.8**	
Enable (EN0 and EN1) Input LOW to HIGH Ramp Delay (TON_DELAY)		**200**			µs
POR to Initialization Complete Time			30	**40**	ms
OUTPUT VOLTAGE CHARACTERISTICS (Note 6)					
Output Voltage Adjustment Range		**0.25**		**3.05**	V
Output Voltage Set-Point Accuracy	Set-point 0.8V to 3.05V	**-0.5**		**0.5**	%
	Set-point 0.25V to <0.8V	**-5**		**5**	mV
VOLTAGE SENSE AMPLIFIER					
Open Sense Current	Only during open pin check of initialization		22		µA
Input Impedance (VSEN - RGND)			200		kΩ
Maximum Common-Mode Input			V_{CC} - 0.2		V
Maximum Differential Input (VSEN - RGND)				**3.05**	V
CURRENT SENSE AND OVERCURRENT PROTECTION					
Maximum Common-Mode Input (SPS mode)	CSRTNx - GND		1.6		V
Maximum Common-Mode Input (DCR mode)	CSRTNx - GND		3.3		V
Current Sense Accuracy	ISEN to ADC accuracy	**-2**		**2**	%
Average Overcurrent Threshold Resolution			0.1		A
Cycle-by-Cycle Current Limiting Threshold Accuracy			0.1		A

Electrical Specifications Recommended operating conditions, V_{CC} = 3.3V, unless otherwise specified. **Boldface limits apply across the operating temperature range -40°C to +85°C. (Continued)**

PARAMETER	TEST CONDITIONS	MIN (Note 7)	TYP	MAX (Note 7)	UNIT
DIGITAL DROOP					
Droop Resolution			0.01		mV/A
OSCILLATORS					
Accuracy of Switching Frequency Setting	When set to 500kHz	**480**	500	**520**	kHz
		-4		**+4**	%
Switching Frequency Range		**200**		**1000**	kHz
SOFT-START RATE AND VOLTAGE TRANSITION RATE					
Minimum Soft-Start Ramp Rate	Programmable minimum rate		20		µs
Maximum Soft-Start Ramp Rate	Programmable maximum rate		10		ms
Soft-Start Ramp Rate Accuracy		**-4**		**4**	%
Minimum Transition Rate	Programmable minimum rate		0.1		mV/µs
Maximum Transition Rate	Programmable maximum rate		100		mV/µs
Transition Rate Accuracy		**-4**		**4**	%
PWM OUTPUT					
PWMx Output High Level	I_{OUT} = 4mA	**V_{CC} - 0.4**			V
PWMx Output Low Level	I_{OUT} = 4mA			**0.4**	V
PWMx Output Tri-State I_{OL}	V_{OH} = V_{CC}			**1**	µA
PWMx Output Tri-State I_{OH}	V_{OL} = 0V	**-1**			µA
THERMAL MONITORING AND PROTECTION					
Temperature Sensor Range		**-50**		**150**	°C
Temperature Sensor Accuracy	TMON to ADC accuracy	**-4.5**		**4.5**	%
TWARN Output Low Impedance		**4**	9	**13**	Ω
TWARN Hysteresis			3		°C
POWER-GOOD AND PROTECTION MONITORS					
PG Output Low Voltage	I_{OUT} = 8mA load			**0.4**	V
PG Leakage Current	With pull-up resistor externally connected to VCC		0.5	**1**	µA
Overvoltage Protection Threshold Resolution			1		mV
Undervoltage Protection Threshold Resolution			1		mV
Overvoltage Protection Threshold When Disabled			V_{CC} - 0.2		V
INPUT VOLTAGE SENSE					
Input Voltage Accuracy	VINSEN to ADC accuracy	**-2.5**		**2.5**	%
Input Voltage Protection Threshold Resolution			1		mV
SMBus/PMBus					
SALERT, SDA Output Low Level	I_{OUT} = 4mA			**0.4**	V
SCL, SDA Input High Level		**1.55**			V
SCL, SDA Input Low Level				**0.8**	V
SCL, SDA Input Hysteresis			2		mV
SCL Frequency Range		**0.05**		**2**	MHz

NOTES:

6. These parts are designed and adjusted for accuracy with all errors in the voltage loop included.
7. Compliance to datasheet limits is assured by one or more methods: production test, characterization, and/or design.

Typical Performance Curves

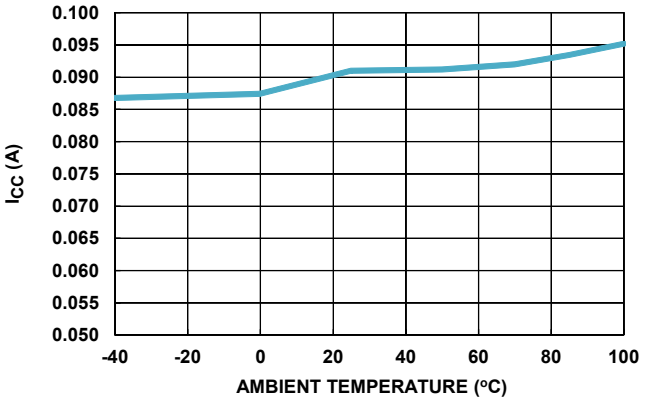

FIGURE 6. NOMINAL SUPPLY CURRENT vs TEMPERATURE

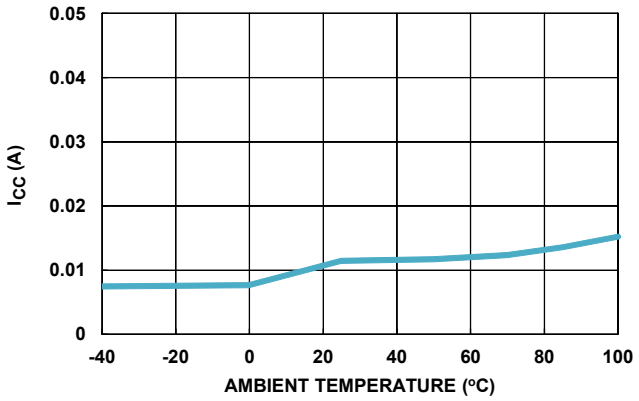

FIGURE 7. SHUTDOWN SUPPLY CURRENT vs TEMPERATURE

Functional Description

Overview

The ISL68127 is a digital dual output 7-phase PWM controller that can be programmed for a single output 7+0, dual output 6+1, 5+2, or 4+3 phase operation. Operation using less than seven phases between two outputs is also supported. Existing digital multiphase solutions use analog comparator based schemes (nonlinear) to bolster the inadequate transient response common to many digital multiphase solutions. The ISL68127 uses a linear voltage regulation scheme to address transient loads. As a result, it is much easier for users to configure and validate their designs when compared with nonlinear schemes. By combining a proprietary low noise and zero latency digital current sense scheme with cutting edge digital design techniques, Intersil is able to meet transient demands without resorting to nonlinear schemes. In addition, the ISL68127 can store up to eight user configurations in NVM and allows the user to select the desired configuration through pin-strap (CONFIG). The result is a system that is easy to configure and deploy.

A number of performance enhancing features are supported in the ISL68127. These include diode braking, automatic phase dropping, DCR/resistor/smart power stage current sense support, load line regulation, and multiple temperature sensing options.

To facilitate configuration development, the PowerNavigator GUI provides a step-by-step arrangement for setup and parametric adjustment. After a configuration has been set, the user can employ PowerNavigator to monitor telemetry or use the PMBus interface based on the supported command set.

PWM Modulation Scheme

The ISL68127 uses Intersil's proprietary linear synthetic current modulation scheme to improve transient performance. This is a unique, constant frequency, dual-edge PWM modulation scheme with both PWM leading and trailing edges being independently moved to give the best response to transient loads. Current balance is an inherent part of the regulation scheme. The modulation scheme is capable of overlapping pulses if the load profile demands such operation. In addition, the modulator is capable of adding or removing pulses from a given cycle in response to regulation demands while still managing maximum average frequency to safe levels. For DC load conditions, the operating frequency is constant.

PMBus Address Selection

When communicating with multiple PMBus devices on a single bus, each device must have its own unique address so the host can distinguish between the devices. The device address can be set using a 1% resistor on the SA pin according to the pin-strap options listed in Table 2.

TABLE 2. RESISTOR VALUES TO ADDRESS MAPPING

R SA (Ω)	PMBus ADDRESS	R SA (Ω)	PMBus ADDRESS
0	60h	1500	50h
180	61h	1800	51h
330	64h	2200	54h
470	65h	2700	55h
680	40h	3300	58h
820	41h	3900	59h
1000	44h	4700	5Ch
1200	45h	5600	5Dh

Phase Configuration

The ISL68127 supports up to two regulated outputs through seven configurable phases. Either output is capable of controlling up to seven phases in any arbitrary mix. Phase assignments are accomplished using the PowerNavigator GUI.

While the device supports arbitrary phase assignment, it is good practice to assign phases to Output 1 in descending sequential numerical order starting from Phase 6. For example, a 4-phase rail could consist of Phases 6, 5, 4, and 3. For Output 0, phases would be assigned starting from Phase 0 in ascending sequential numerical order.

Automatic Phase Add and Drop

To produce the most optimal efficiency across a wide range of output loading, the modulator supports automatic dropping or adding of phases. Use of automatic phase dropping is optional. If automatic phase dropping is enabled, the number of active phases at any time is determined solely by load current. During operation, phases of Output 1 will drop beginning with the lowest phase number assigned. Phase dropping begins with the highest assigned phase number. Figure 8 illustrates the typical characteristic of efficiency vs load current vs phase count.

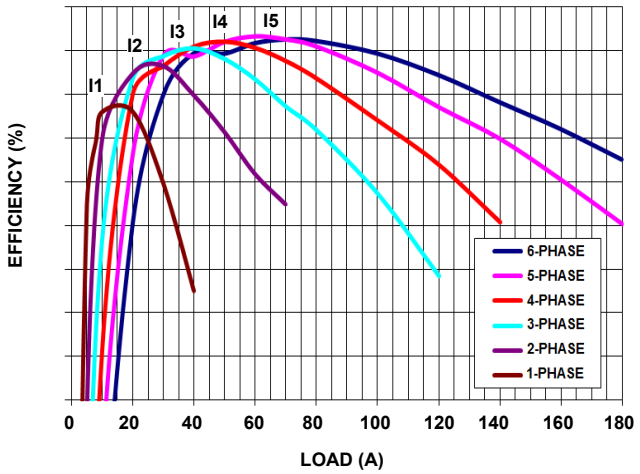

FIGURE 8. EFFICIENCY vs PHASE NUMBER

Phases are dropped one at a time with a user-programmed drop delay between drop events. As an example, suppose the delay is set to 1ms and three phases are active. If the load suddenly drops to a level needing only one phase, the ISL68127 will begin by dropping a phase after 1ms. An additional phase will be dropped each 1ms thereafter until only one phase remains.

In addition to the described load current add/drop thresholds, the fast phase add function provides a very rapid response to transient load conditions. This feature continuously monitors the system regulation error and, if it exceeds the user set threshold, all dropped phases will be readied for use. In this way, there is no delay if all phases are needed to support a load transient. The fast phase add threshold is set in the PowerNavigator GUI. Output current threshold for adding and dropping phases can also be configured.

To ensure dropped phases have sufficient boot capacitor charge to turn on the high-side MOSFET after a long period of disable, a boot refresh circuit turns on the low-side MOSFET of each dropped phase to refresh the boot capacitor. The frequency of the boot refresh is programmable using PowerNavigator.

Output Voltage Configuration

Output voltage set points and thresholds for each output can be configured using PowerNavigator. Parameters such as output voltage, V_{OUT} margin high/low, and V_{OUT} OV/UV fault thresholds can be configured. Additionally, output voltage and margin high/low can be adjusted during regulation using the PMBus commands VOUT_COMMAND, VOUT_MARGIN_HIGH, and VOUT_MARGIN_LOW for further tuning.

The following V_{OUT} relationships must be maintained for correct operation: VOUT_OV_FAULT_LIMIT > VOUT_COMMAND (VOUT_MARGIN_HIGH and VOUT_MARGIN_LOW, if used) > VOUT_UV_FAULT_LIMIT. Additionally, the V_{OUT} commands are bounded by VOUT_MAX and VOUT_MIN to provide protection against incorrect set points being sent to the device.

Switching Frequency

The switching frequency is user-configurable over a range of 200kHz to 1MHz.

Current Sensing

The ISL68127 supports DCR, resistor, and smart power stage current sensing. Connection to the various sense elements is accomplished through the CS and CSRTN pins. Current sensing inputs are high impedance differential inputs to reject noise and ground related inaccuracies.

To accommodate a wide range of effective sense resistance, information about the effective sense resistance and required per phase current capability is used by the GUI to properly configure the current sense circuitry.

INDUCTOR DCR SENSING

DCR sensing takes advantage of the fact that an inductor winding has a resistive component (DCR) that will drop a voltage proportional to the inductor current. Figure 9 shows that the DCR is treated as a lumped element with one terminal inaccessible for measurement. Fortunately, a simple R-C network as shown in Figure 10 is capable of reproducing the hidden DCR voltage. By simply matching the R-C time constant to the L/DCR time constant, it is possible to precisely recreate the DCR voltage across the capacitor. This means that VDCR(t) = VC(t), thus preserving even the high frequency characteristic of the DCR voltage.

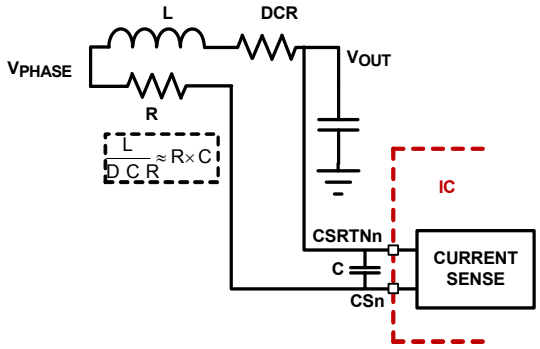

FIGURE 9. DCR SENSING CONFIGURATION

Modern inductors often have such low DCR values that the resulting signal is <10mV. To avoid noise problems, care must be taken in the PCB layout to properly place the R-C components and route the differential lines between controller and inductor. Figure 9 shows one PCB design method that places the R component near the inductor V_{PHASE} and the C component very close to the IC pins. This minimizes routing of the noisy V_{PHASE} and maximizes filtering near the IC. The lines between the inductor and IC should be routed as a pair on a single layer directly to the controller. Care must be taken to avoid routing the

pair near any switching signals including Phase, PWM etc. This is the method used by Intersil on evaluation board designs.

This method senses the resistance of a metal winding where the DCR value will increase with temperature. This must be compensated or the sensed (and reported) current will increase with temperature. To compensate the temperature effect, the ISL68127 provides temperature sensing options and an internal methodology to apply the correction.

RESISTIVE SENSING

For more accurate current sensing, a dedicated current sense resistor, R_{SENSE}, in series with each output inductor can serve as the current sense element. However, this technique reduces the overall converter efficiency due to the additional power loss on the current sense element, R_{SENSE}.

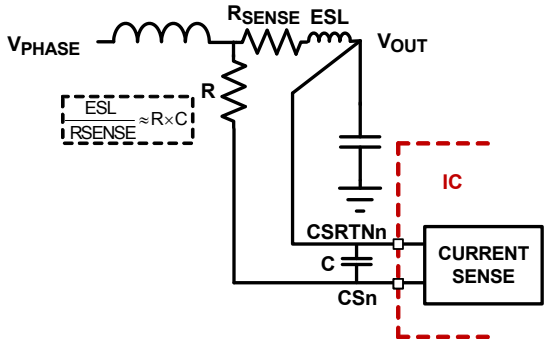

FIGURE 10. SENSE RESISTOR IN SERIES WITH INDUCTOR

A current sensing resistor has a distributed parasitic inductance, known as Equivalent Series Inductance (ESL), typically less than 4nH. Consider the ESL as a separate lumped quantity, as shown in Figure 10. The phase current I_L, flowing through the inductor, will also pass through the ESL. Similar to DCR sensing described previously, a simple R-C network across the current sense resistor extracts the R_{SENSE} voltage. Simply match the ESL/R_{SENSE} time constant to the R-C time constant.

Figure 11 shows the sensed waveforms with and without matching RC when using resistive sense. PCB layout should be treated similar to that described for DCR sense.

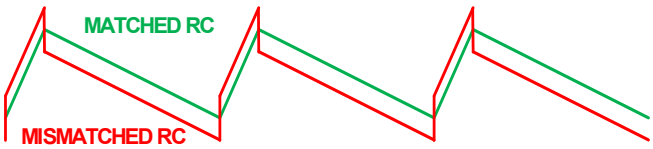

FIGURE 11. VOLTAGE ACROSS R WITH AND WITHOUT RC

L/DCR OR ESL/R_{SEN} MATCHING

Assuming the compensator design is correct, Figure 12 shows the expected load transient response waveforms if L/DCR or ESL/R_{SEN} is matching the R-C time constant. When the load current I_{OUT} has a square change, the output voltage V_{OUT} also has a square response, except for the potential overshoot at load release. However, there is always some uncertainty in the true parameter values involved in the time constant matching and therefore fine-tuning is generally required.

If the R-C time constant is too large or too small, $V_C(t)$ will not accurately represent real-time $I_{OUT}(t)$ and will worsen the transient response. Figure 13 shows the load transient response when the R-C timing constant is too small. In this condition, V_{OUT} will sag excessively upon load insertion and may create a system failure or early overcurrent trip. Figure 14 shows the transient response when the R-C timing constant is too large. V_{OUT} is sluggish in drooping to its final value. Use these general guides if fine-tuning is needed.

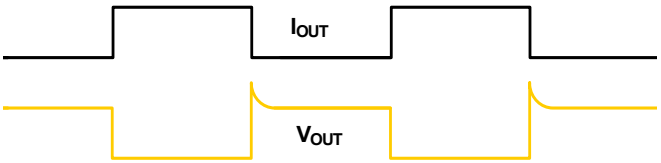

FIGURE 12. DESIRED LOAD TRANSIENT RESPONSE WAVEFORMS

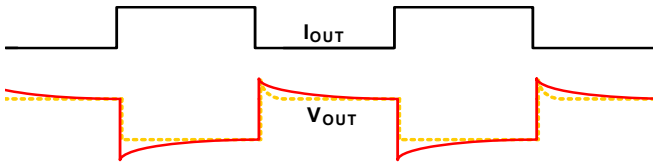

FIGURE 13. LOAD TRANSIENT RESPONSE WHEN R-C TIME CONSTANT IS TOO SMALL

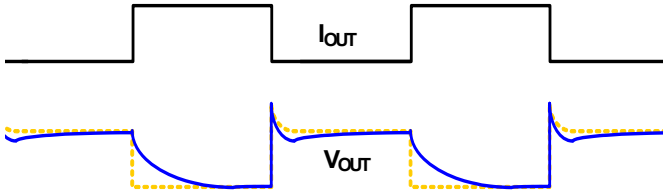

FIGURE 14. LOAD TRANSIENT RESPONSE WHEN R-C TIME CONSTANT IS TOO LARGE

SPS CURRENT SENSING

SPS current sense is accomplished by sensing each SPS IMON output individually using VCCS as a common reference. Connect all SPS IREF input pins and all ISL68127 CSRTNn input pins together and tie them to VCCS, then connect the SPS IMONn output pins to the corresponding ISL68127 CSn input pins. The signals should be run as differential pairs from the SPS back to the ISL68127.

Temperature Sensing

The ISL68127 supports temperature sensing through BJT or smart power stage sense elements. Support for BJT sense elements uses the well known delta Vbe method and allows up to two sensors (MMBT3906 or similar) on each temperature sense input, TMON0 and TMON1. Support for smart power stage uses a linear conversion algorithm and allows one sensor reading per pin. The conversion from voltage to temperature for smart power stage sensing is user-programmable using the PowerNavigator GUI.

SPS temperature sensing measures the temperature-dependent voltage output on the SPS TMON pin. All of the SPS devices attached to the Output 0 rail have their TMON pins connected to the ISL68127 TMON0 pin. All of the SPS devices attached to the Output 1 rail have their TMON pins connected to the ISL68127 TMON1 pin. The reported temperature is that of the highest temperature SPS of the group.

In addition to the external temperature sense, the IC senses its own die temperature, which can be monitored using PowerNavigator.

Sensed temperature is used in the system for faults, telemetry, and temperature compensation of sensed current.

Temperature Compensation

The ISL68127 supports inductor DCR sensing, which generally requires temperature compensation due to the copper wire used to form inductors. Copper has a positive temperature coefficient of approximately 0.39%/°C. Because the voltage across the inductor is sensed for the output current information, the sensed current has the same positive temperature coefficient as the inductor DCR.

Compensating current sense for temperature variation generally requires that the current sensing element temperature and its temperature coefficient is known. Although the temperature coefficient is generally obtained easily, actual current sense element temperature is essentially impossible to measure directly. Instead, a temperature sensor (a BJT for the ISL68127) placed near the inductors is measured and the current sense element (DCR) temperature is calculated from that measurement. Calculating current sense element temperature is equivalent to applying gain and offset corrections to the temperature sensor measurement. The ISL68127 supports both corrections.

Figure 15 depicts the block diagram of temperature compensation. A BJT placed near the inductors used for DCR sensing is monitored by the IC using the well known delta Vbe method of temperature sensing. T_{SENSE} is the direct measured temperature of the BJT. Because the BJT is not directly sensing DCR, corrections must be made so that T_{DCR} reflects the true DCR temperature. Corrections are applied according to the relationship shown in Equation 1, where k_{SLOPE} represents a gain scaling and T_{OFFSET} represents an offset correction. These parameters are provided by the designer using the PowerNavigator GUI:

$$T_{DCR} = k_{SLOPE} \bullet T_{SENSE} + T_{OFFSET} \quad \text{(EQ. 1)}$$

When T_{DCR} has been determined, the compensated DCR value can be determined according to Equation 2, where DCR_{25} is the DCR at +25°C and T_C is the temperature coefficient of copper (3900 ppm/°C). $T_{DCR} = T_{ACTUAL}$ here:

$$DCR_{CORR} = DCR_{25} \bullet (1 + T_C \bullet (T_{ACTUAL} - 25)) \quad \text{(EQ. 2)}$$

Thus, the temperature-compensated DCR is now used to determine the actual value of current in the DCR sense element.

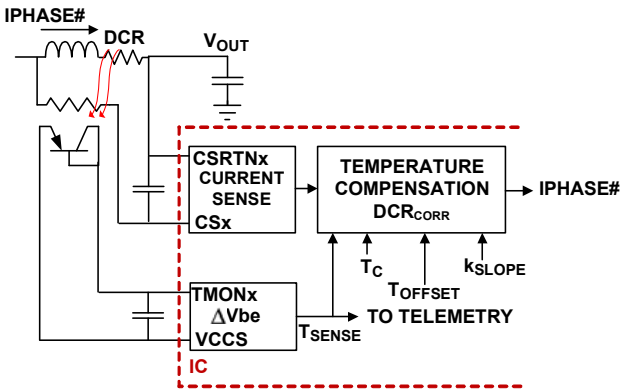

FIGURE 15. BLOCK DIAGRAM OF TEMPERATURE COMPENSATION

In the physical PCB design, the temperature sense diode (BJT) is placed close to the inductor of the phase that is never dropped during automatic phase drop operation. Additionally, a filter capacitor no larger than 500pF should be added near the IC between each TMONx pin and VCCS. This is shown in Figure 16.

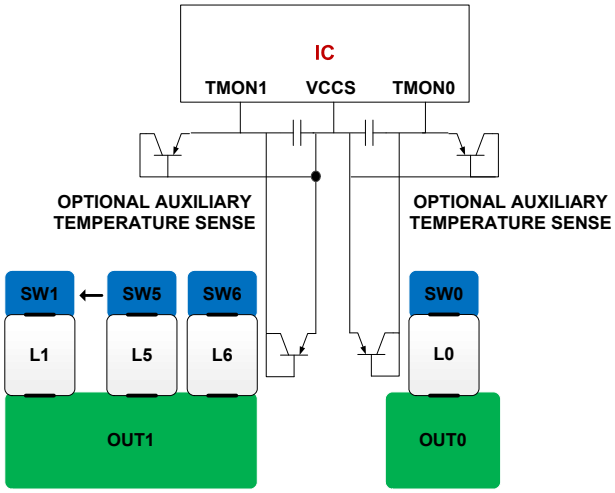

FIGURE 16. RECOMMENDED PLACEMENT OF TEMPERATURE SENSORS

Lossless Input Current and Power Sensing

Input current telemetry is provided through an input current synthesizer. By using the IC's ability to precisely determine its operational conditions, input current can be synthesized to a high degree of accuracy without the need for a lossy sense resistor. Fine-tuning of offset and gain are provided for in the GUI. Note that input current sense fine-tuning must be done after output current sense setup is finalized. With a precise knowledge of input current and voltage, input power can be computed.

Input current and power telemetry is accessed through PMBus and easily monitored in PowerNavigator. V_{IN} is monitored directly by the VINSEN pin through a 1:5 resistor divider as shown in Figure 17.

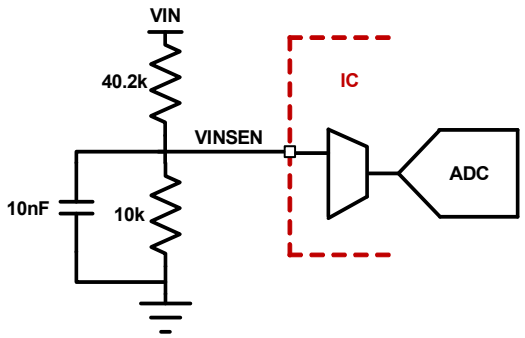

FIGURE 17. INPUT VOLTAGE SENSE CONFIGURATION

Voltage Regulation

Output voltage is sensed through the remote sense differential amplifier and digitized. From this point, the regulation loop is entirely digital. Traditional PID controls are used in conjunction with several enhanced methods to compensate the voltage regulation loop and tune the transient response.

Current Feedback

Current feedback in a voltage regulator is often used to ease the stability design of the voltage feedback path. Additionally, many microprocessors require the voltage regulator to have a controlled output resistance (known as load line or droop regulation) and this is accomplished using current feedback.

For applications requiring droop regulation, the designer simply specifies the output resistance desired using the PowerNavigator GUI.

Current feedback stability benefits are available for rails that do not specify droop regulation such as system agent. For these applications, the designer can enable AC current feedback in the GUI. With this configuration, the DC output voltage will be steady regardless of load current.

Power-On Reset (POR)

Initialization of the ISL68127 begins after V_{CC} crosses its rising POR threshold. When POR conditions are met, the internal 1.2V LDO is enabled and basic digital subsystem integrity checks begin. During this process, the controller will load the selected user configuration from NVM as indicated by the CONFIG pin resistor value, read V_{IN} UVLO thresholds from memory, and start the telemetry subsystem. With telemetry enabled, V_{IN} can be monitored to determine when it exceeds its user-programmable rising UVLO threshold. When V_{CC} and V_{IN} satisfy their respective voltage conditions, the controller is in its shutdown state. It will transition to its active state and begin soft-start when the state of EN0/EN1 command is at start-up. While in shutdown mode, the PWM outputs are held in a high-impedance state to ensure the drivers remain off.

Soft-Start Delay and Ramp Times

It may be necessary to set a delay from when an enable signal is received until the output voltage starts to ramp to its target value. In addition, the designer may wish to precisely set the time required for an output to ramp to its target value after the delay period has expired. These features can be used as part of an overall inrush current management strategy or to precisely control how fast a load IC is turned on. The ISL68127 gives the system designer several options for precisely and independently controlling both the delay and ramp time periods. The soft-start delay period begins when the EN pin is asserted and ends when the delay time expires.

The soft-start delay and ramp-up/down times can be configured using PowerNavigator. The device needs approximately 200µs after enable to initialize before starting to ramp up. When the soft-start ramp period is set to 0ms, the output ramps up as quickly as the output load capacitance and loop settings allow. It is recommended to set the ramps to a non-zero value to prevent inadvertent fault conditions due to excessive inrush current.

Stored Configuration Selection

As many as eight configurations can be stored and used at any time using the on-board nonvolatile memory. Configurations are assigned an identifier number between 0 and 7 at power-up. The device will load the configuration indicated by the 1% resistor value detected on the CONFIG pin. Resistor values are used to indicate use of one of the eight possible configurations. Table 3 provides the resistor value corresponding to each configuration identifier.

TABLE 3. RESISTOR VALUES TO CONFIGURATION MAPPING

R CONFIG (Ω)	CONFIG ID
6800	0
1800	1
2200	2
2700	3
3300	4
3900	5
4700	6
5600	7

Only the most recent configuration with a given number can be loaded. The device supports a total of eight stored operations. As an example, a configuration with the identifier 0 could be saved eight times or configurations with all eight identifiers could be stored one time each for a total of eight save operations.

PowerNavigator provides a simple interface to save and load configurations.

Fault Monitoring and Protection

The ISL68127 actively monitors temperature, input voltage, output voltage, and output current to detect and report fault conditions. Fault monitors trigger configurable protective measures to prevent damage to a load. The power-good indicators, PG0/PG1, are provided for linking to external system monitors.

A high level of flexibility is provided in the ISL68127 fault logic. Faults can be enabled or disabled individually. Each fault type can also be configured to either latch off or retry indefinitely.

Power-Good Signals

The PG0/PG1 pins are open-drain, power-good outputs that indicate completion of the soft-start sequence and output voltage of the associated rail within the expected regulation range.

The PG pins can be associated or disassociated with a number of the available fault types. This allows a system design to be tailored for virtually any condition. In addition, these power-good indicators will be pulled low when a fault (OCP or OVP) condition or UV condition is detected on the associated rail.

Output Voltage Protection

Output voltage is measured at the load sensing points differentially for regulation and the same measurement is used for OVP and UVP. The fault thresholds are set using PMBus commands. Figure 18 shows a simplified OVP/UVP block diagram. The output voltage comparisons are done in the digital domain.

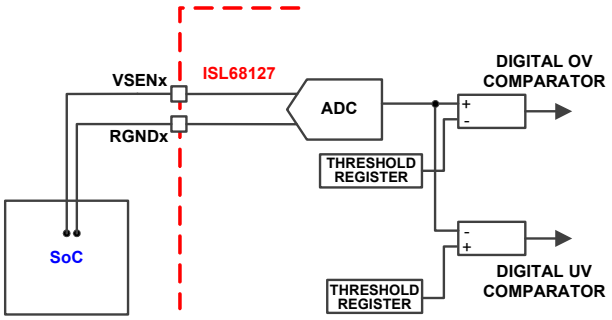

FIGURE 18. OVP, UVP COMPARATORS

The device responds to an output overvoltage condition by disabling the output, declaring a fault, setting the SALRT pin, setting the PG pin, and then pulsing the LFET until the output voltage has dropped below the threshold. Similarly, the device responds to an output undervoltage condition by disabling the output, declaring a fault, setting the SALRT pin, and setting the PG pin. The output will not restart until the EN pin is cycled (unless the device is configured to retry).

In addition, the ISL68127 features open pin sensing protection to detect an open of the output voltage sensing circuit. When this condition is detected, controller operation is suspended.

Output Current Protection

The ISL68127 offers a comprehensive overcurrent protection scheme. Each phase is protected from both excessive peak current and sustained current. In addition, the system is protected from sustained total output overcurrent.

Figure 19 depicts a block diagram of the system total output current protection scheme. In this scheme, the phase currents are summed to form ISUM. ISUM is then fed to dual response paths allowing the user to program separate LPF, threshold, and response time. One path is intended to allow response more quickly than the other path. With this system, the user can allow high peak total current for a short time and a lower level of current for a sustained time. Note that neither of these paths affect PWM activity on a cycle-by-cycle basis. The characteristics of each path are easily set in PowerNavigator.

In addition to total output current, the ISL68127 provides an individual phase peak current limit that will act on PWM in a cycle-by-cycle manner. This means that if a phase current is detected to exceed the OC threshold, the phase PWM signal will be inverted to move current away from the threshold. In addition to limiting positive or negative peak current on a cycle-by-cycle basis, individual phase OC can be configured to limit current indefinitely or to declare a fault after a programmable number of consecutive OC cycles. This feature is useful for applications where a fault shutdown of the system would not be acceptable but some ability to limit phase currents is desired. Figures 22 and 23 on page 18 depict this operation. If configured for indefinite current limit, the converter will act as a current source and V_{OUT} will not remain at its regulation point. It should be noted that in this case, V_{OUT} OV or UV protection action may occur, which could shut the regulator down.

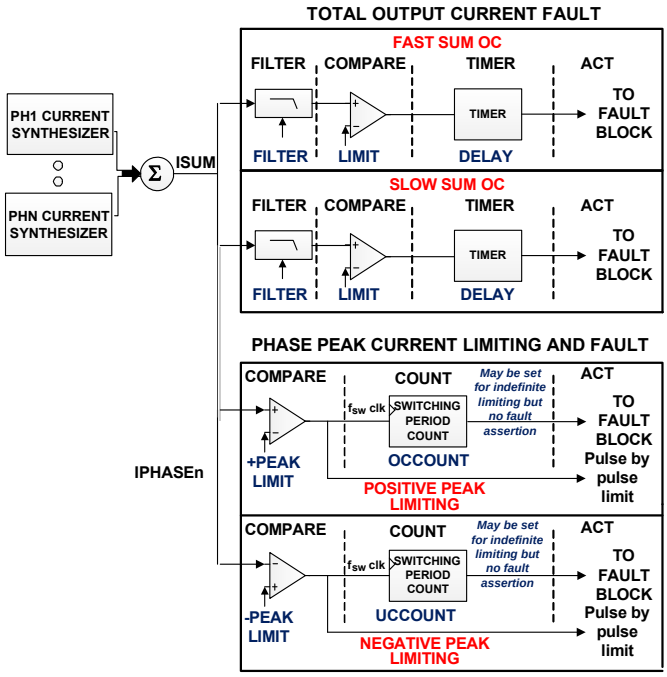

FIGURE 19. OCP FUNCTIONAL DIAGRAM

Example OCP_Fast and OCP_Slow waveforms are shown in Figures 20 and 21.

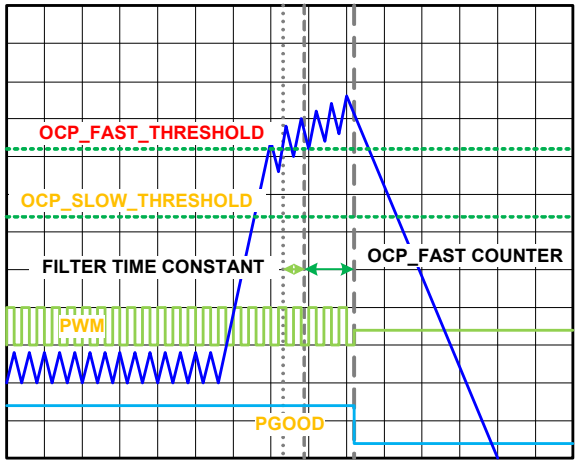

FIGURE 20. OCP_FAST

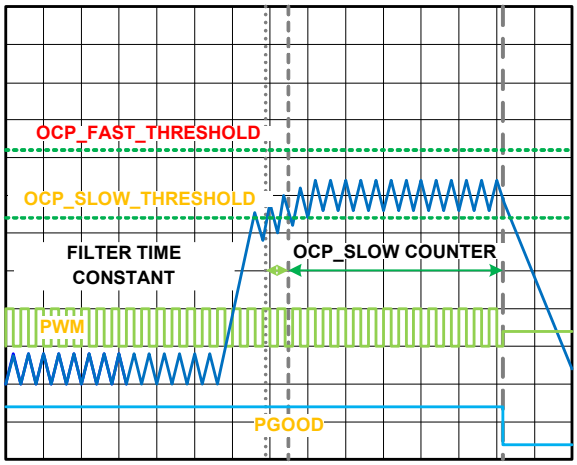

FIGURE 21. OCP_SLOW

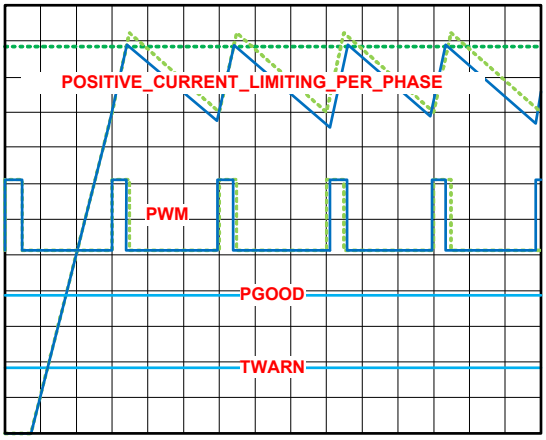

FIGURE 22. POSITIVE PEAK PHASE CURRENT LIMITING

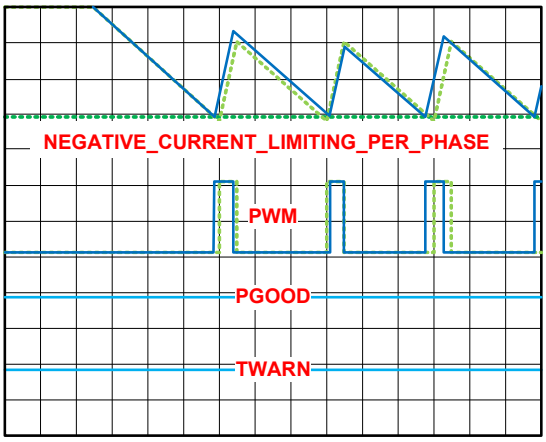

FIGURE 23. NEGATIVE PEAK PHASE CURRENT LIMITING

Smart Power Stage OC Fault Detect

Intersil Smart Power Stage (SPS) devices will output a large signal on their IMON lines if peak current exceeds their preprogrammed threshold. (For more detail about this functionality, refer to the relevant SPS datasheet.) The ISL68127 is equipped to detect this fault flag and immediately shut down. This detector is enabled on the GUI Overcurrent Fault setup screen.

This feature functions by detecting signals that exceed the current sense ADC full scale range. If this detector is disabled while using an Intersil SPS, the SPS Fault# signal must be connected to the controller Enable pin of the associated rail. This will ensure that and SPS OC event will be detected and the converter will shut down.

Thermal Monitoring and Protection

The TWARN pin indicates the temperature status of the voltage regulator. The TWARN pin is an open-drain output and an external pull-up resistor is required. This signal is valid only after the controller is enabled.

The TWARN signal can be used to inform the system that the temperature of the voltage regulator is too high and the load should reduce its power consumption. TWARN only indicates a thermal warning, not a fault.

The thermal monitoring function block diagram is shown in Figure 24 on page 19. The ISL68127 has two over-temperature thresholds, which allow both warning and fault indications. Each temperature sensor threshold can be independently programmed in the PowerNavigator GUI. Figure 25 on page 19 shows the thermal warning to TWARN and Figure 26 on page 19 shows the over-temperature fault to shutdown. PGOOD and TWARN can be configured to indicate these warning and fault thresholds using PowerNavigator.

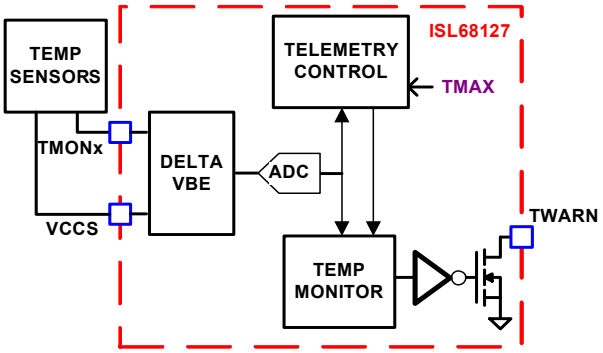

FIGURE 24. BLOCK DIAGRAM OF THERMAL MONITORING FUNCTION

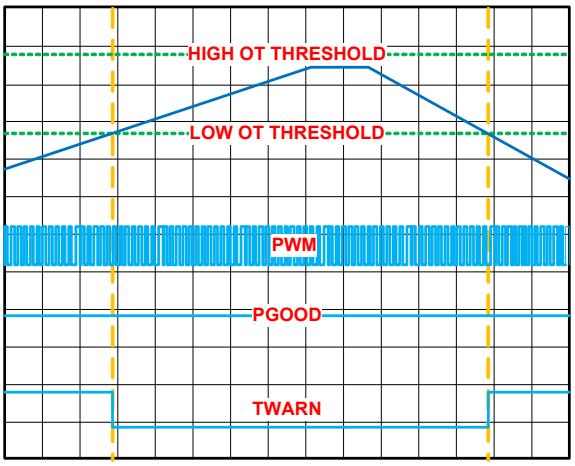

FIGURE 25. THERMAL WARNING TO TWARN

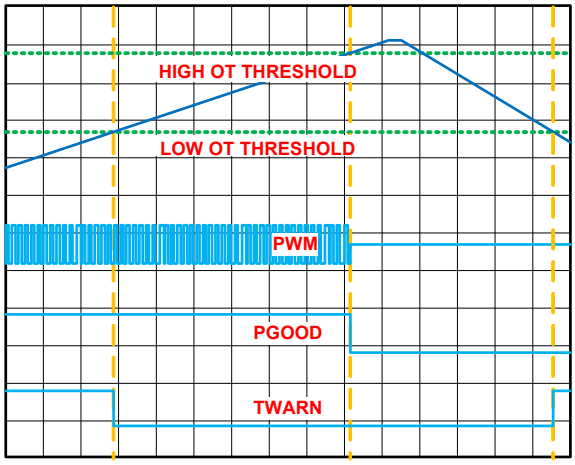

FIGURE 26. OVER-TEMPERATURE FAULT

Layout and Design Considerations

In addition to TB379, the following PCB layout and design strategies are intended to minimize noise coupling and the impact of board parasitic impedances on converter performance. In addition, these strategies will optimize the heat dissipating capabilities of the printed circuit board. This section highlights some important practices, which should be followed during the layout process.

Table 4 provides general guidance on best practices related to pin noise sensitivity. Good engineering judgment is required to implement designs based on criteria specific to the situation.

TABLE 4. PIN DESIGN AND/OR LAYOUT CONSIDERATIONS

PIN NAME	NOISE SENSITIVE	DESCRIPTION
VINSEN	Yes	Connects to the resistor divider between VIN and GND (see Figure 17). Filter VINSEN with 10nF to GND.
RGNDx VSENx	Yes	Treat each of the remote voltage sense pairs as differential signals in the PCB layout. They should be routed side by side on the same layer. They should not be routed in proximity to noisy signals like PWM or Phase. Tie to ground when not used.
PGx	No	Open-drain. 3.3V maximum pull-up voltage. Tie to ground when not used.
SCL, SDA, SALRT	Yes	50kHz to 2MHz signal during communication, pair up with SALRT and route carefully. 20 mils spacing within SDA, SALRT and SCL; and more than 30 mils to all other signals. Refer to the SMBus design guidelines and place proper termination resistance for impedance matching. Tie to ground when not used.
$TMON^X$	Yes	When diode sensing is used, VCCS is the return path for the delta Vbe currents. Use a separate VCCS route specifically for diode temp sense. A filter capacitor no greater than 500pF should be placed between each TMON pin and at VCCS pin near the IC. Tie to ground when not used.
TWARN	No	Open-drain. 3.3V maximum pull-up voltage.
VCC	Yes	Place at least 2.2µF MLCC decoupling capacitor directly at the pin.
VCCS	Yes	Place 4.7µF MLCC decoupling capacitor directly at the pin.
PWM	No	Avoid routing near noise sensitive analog lines such as current sense or voltage sense.
CSx CSRTNx	Yes	Treat each of the current sense pairs as differential signals in the PCB layout. They should be routed side by side on the same layer. They should not be routed in proximity to noisy signals like PWM or Phase. Proper routing of current sense is perhaps the most critical of all the layout tasks.
GND	Yes	This EPAD is the return of PWM output drivers. Use four or more vias to directly connect the EPAD to the power ground plane.
General Comments		The layer next to the top or bottom layer is preferred to be ground layers, while the signal layers can be sandwiched in the ground layers if possible.

PMBus Operation

The ISL68127 PMBus slave address is pin selectable using the SA pin and resistor value described in Table 2 on page 12. For proper operation, users should follow the PMBus protocol, as shown in "PMBus Protocol" on page 21. The supported PMBus addresses are in 8-bit format (including write and read bit). See Table 5. The least significant bit of the 8-bit address is for write (0h) and read (1h). PMBus commands are in the range from 0x00h to 0xFFh. For the ISL68127, Page 0 corresponds to Output 0 and Page 1 to Output 1. For reference purposes, the 7-bit format addresses are also summarized in Table 5.

TABLE 5. PMBus 8-BIT AND 7-BIT FORMAT ADDRESS (HEX)

8-BIT	7-BIT	8-BIT	7-BIT	8-BIT	7-BIT	8-BIT	7-BIT
80/81	40	A0/A1	50	B0/B1	58	C0/C1	60
82/83	41	A2/A3	51	B2/B3	59	C2/C3	61
88/89	44	A8/A9	54	B8/B9	5C	C8/C9	64
8A/8B	45	AA/AB	55	BA/BB	5D	CA/CB	65

The PMBus data formats follow PMBus specification version 1.3 and SMBus version 2.0.

Basic PMBus telemetry commands are summarized in "PMBus Command Summary" on page 22.

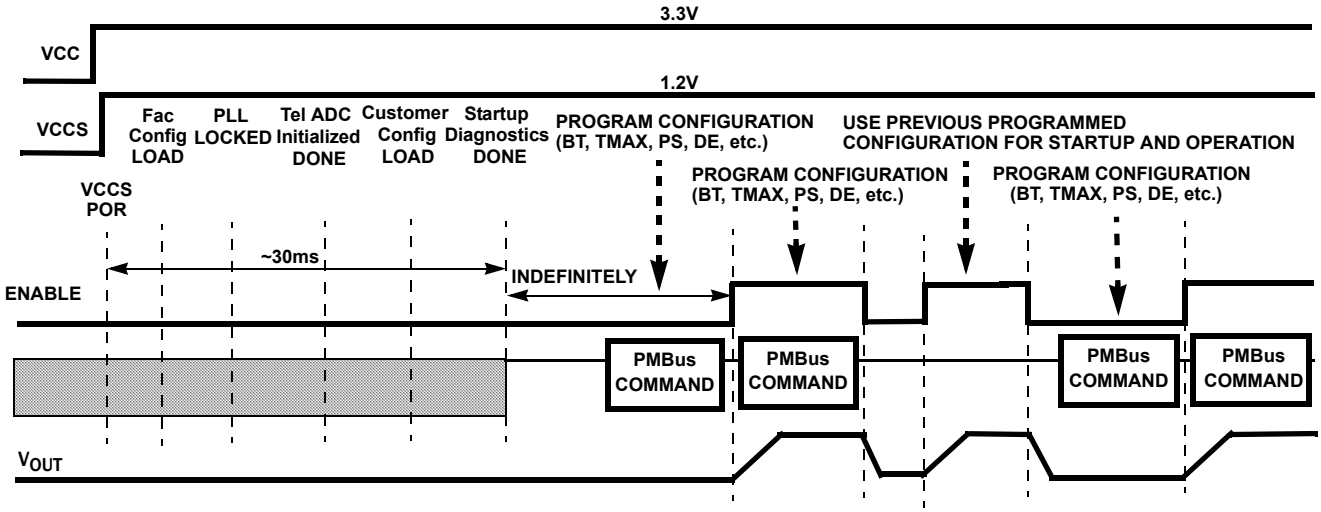

FIGURE 27. SIMPLIFIED PMBus INITIALIZATION TIMING DIAGRAM

PMBus Protocol

S: Start Condition
A: Acknowledge (“0”)
N: Not Acknowledge (“1”)
W: Write (“0”)
RS: Repeated Start Condition
R: Read (“1”)
PEC: Packet Error Checking
P: Stop Condition
Acknowledge or DATA from Slave, ISL68127 Controller

1. Send Byte Protocol

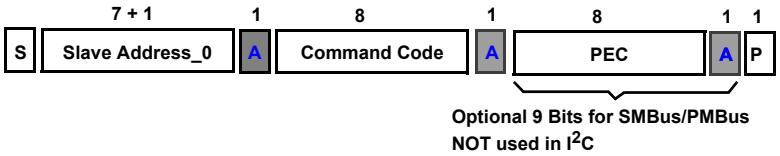

Example command: 03h Clear Faults
(This will clear all of the bits in Status Byte for the selected Rail)

2. Write Byte/Word Protocol

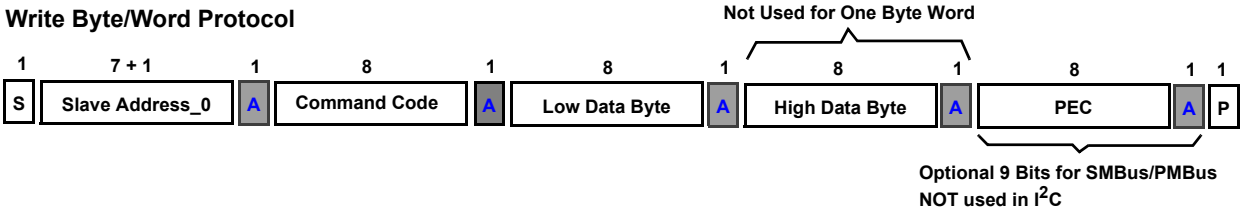

Example command: 21h VOUT_COMMAND

3. Read Byte/Word Protocol

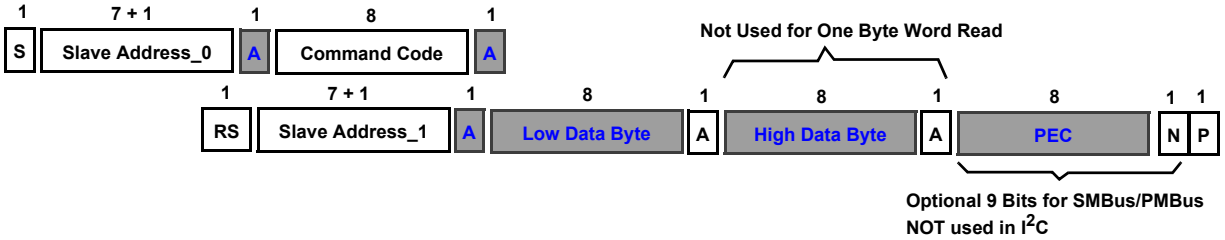

Example command: 8B READ_VOUT (Two words, read voltage of the selected rail).

STOP (P) bit is NOT allowed before the repeated START condition when “reading” contents of a register.

4. Group Command Protocol - No more than one command can be sent to the same Address

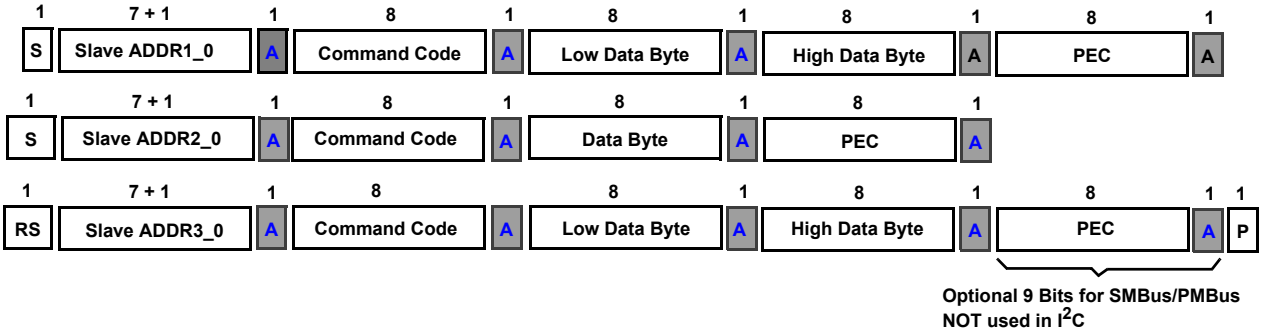

5. Alert Response Address (ARA, 0001_1001, 25h) for SMBus and PMBus, not used for I^2C

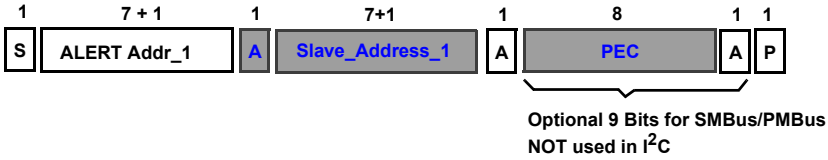

PMBus Command Summary

CODE	COMMAND NAME	DESCRIPTION	TYPE	DATA FORMAT	DEFAULT VALUE	DEFAULT SETTING
00h	PAGE	Selects Output 0, 1, or both	R/W	Bit Field	00h	Page 0
01h	OPERATION	Enable/disable, margin settings	R/W	Bit Field	08h	Off
02h	ON_OFF_CONFIG	On/off configuration settings	R/W	Bit Field	16h	ENABLE pin control
03h	CLEAR_FAULTS	Clears all fault bits in all registers and releases the SALRT pin	Write	N/A	N/A	
10h	WRITE_PROTECT	Write protection to sets of commands	R/W	Bit Field	00h	No write protection
20h	VOUT_MODE	Defines format for output voltage related commands	Read	Bit Field	40h	Direct format
21h	VOUT_COMMAND	Sets the nominal V_{OUT} target	R/W	Direct	0384h	900mV
22h	VOUT_TRIM	Applies trim voltage to V_{OUT} set-point	R/W	Direct	0000h	0mV
24h	VOUT_MAX	Absolute maximum voltage setting	R/W	Direct	08FCh	2300mV
25h	VOUT_MARGIN_HIGH	Sets V_{OUT} target during margin high	R/W	Direct	0640h	1600mV
26h	VOUT_MARGIN_LOW	Sets V_{OUT} target during margin low	R/W	Direct	00FAh	250mV
27h	VOUT_TRANSITION_RATE	Slew rate setting for V_{OUT} changes	R/W	Direct	0064h	10mV/µs
28h	VOUT_DROOP	Sets the load line (V/I slope) resistance for the output	R/W	Direct	0000h	0µV/A
2Bh	VOUT_MIN	Absolute minimum target voltage setting	R/W	Direct	0000h	0mV
40h	VOUT_OV_FAULT_LIMIT	Sets the V_{OUT} overvoltage fault threshold	R/W	Direct	076Ch	1900mV
44h	VOUT_UV_FAULT_LIMIT	Sets the V_{OUT} undervoltage fault threshold	R/W	Direct	0000h	0mV
4Fh	OT_FAULT_LIMIT	Sets the over-temperature fault threshold	R/W	Direct	007Dh	+125°C
51h	OT_WARN_LIMIT	Sets the over-temperature warn threshold	R/W	Direct	07D0h	+2000°C
55h	VIN_OV_FAULT_LIMIT	Sets the V_{IN} overvoltage fault threshold	R/W	Direct	36B0h	14,000mV
59h	VIN_UV_FAULT_LIMIT	Sets the V_{IN} undervoltage fault threshold	R/W	Direct	1F40h	8,000mV
5Bh	IIN_OC_FAULT_LIMIT	Sets the I_{IN} overcurrent fault threshold	R/W	Direct	0032h	50A
60h	TON_DELAY	Sets the delay time from enable to V_{OUT} rise	R/W	Direct	0014h	200µs
61h	TON_RISE	Turn-on rise time	R/W	Direct	01F4h	500µs
64h	TOFF_DELAY	Turn-off delay time	R/W	Direct	0000h	0µs
65h	TOFF_FALL	Turn-off fall time	R/W	Direct	01F4h	500µs
78h	STATUS_BYTE	First byte of STATUS_WORD	Read	Bit Field	N/A	N/A
79h	STATUS_WORD	Summary of critical faults	Read	Bit Field	N/A	N/A
7Ah	STATUS_VOUT	Reports V_{OUT} faults	Read	Bit Field	N/A	N/A
7Bh	STATUS_IOUT	Reports I_{OUT} faults	Read	Bit Field	N/A	N/A
7Ch	STATUS_INPUT	Reports input faults	Read	Bit Field	N/A	N/A
7Dh	STATUS_TEMPERATURE	Reports temperature warnings/faults	Read	Bit Field	N/A	N/A
7Eh	STATUS_CML	Reports communication, memory, logic errors	Read	Bit Field	N/A	N/A
80h	STATUS_MFR_SPECIFIC	Reports specific events	Read	Bit Field	N/A	N/A
88h	READ_VIN	Reports input voltage measurement	Read	Direct	N/A	N/A
89h	READ_IIN	Reports input current measurement	Read	Direct	N/A	N/A
8Bh	READ_VOUT	Reports output voltage measurement	Read	Direct	N/A	N/A
8Ch	READ_IOUT	Reports output current measurement	Read	Direct	N/A	N/A
8Dh	READ_TEMPERATURE_1	Reports power stage temperature measurement	Read	Direct	N/A	N/A

PMBus Command Summary (Continued)

CODE	COMMAND NAME	DESCRIPTION	TYPE	DATA FORMAT	DEFAULT VALUE	DEFAULT SETTING
8Eh	READ_TEMPERATURE_2	Reports TMON0 temperature measurement	Read	Direct	N/A	N/A
8Fh	READ_TEMPERATURE_3	Reports TMON1 temperature measurement	Read	Direct	N/A	N/A
96h	READ_POUT	Reports output power	Read	Direct	N/A	N/A
97h	READ_PIN	Reports input power	Read	Direct	N/A	N/A
98h	PMBUS_REVISION	Reports specific events	Read	Bit Field	33h	Revision 1.3
ADh	IC_DEVICE_ID	Reports device identification information	Block Read	Bit Field	49D22800h	ISL68127
AEh	IC_DEVICE_REV	Reports device revision information	Block Read	Bit Field	N/A	N/A
E7h	APPLY_SETTINGS	Instructs device to apply PMBus configuration changes	Write	Bit Field	N/A	N/A
F2h	RESTORE_CONFIG	Allows selection of configurations from NVM	Write	Bit Field	N/A	N/A

PMBus Use Guidelines

All commands can be read at any time.

Always disable the outputs when writing commands that change device settings. Exceptions to this rule are commands intended to be written while the device is enabled, for example, OPERATION.

PMBus Data Formats

Direct (D)

The Direct data format is a 2-byte two's complement binary integer.

Bit Field (BIT)

A breakdown of Bit Field is provided in "PMBus Command Detail" on page 24.

PMBus Command Detail

PAGE (00h)

Definition: Selects Controller 0, Controller 1, or both Controllers 0 and 1 to receive commands. All commands following this command will be received and acted on by the selected controller or controllers.

Data Length in Bytes: 1

Data Format: Bit Field

Type: R/W

Default Value: 00h

COMMAND	PAGE (00h)							
Format	Bit Field							
Bit Position	7	6	5	4	3	2	1	0
Access	R/W	R/W	R/W	R/W	R/W	R/W	R/W	R/W
Function	See Following Table							
Default Value	0	0	0	0	0	0	0	0

BITS 7:4	BITS 3:0	PAGE
0000	0000	0
0000	0001	1
1111	1111	Both

OPERATION (01h)

Definition: Sets enable state when configured for PMBus enable. Sets output voltage margin settings. The device always acts on faults during margin. The following table reflects the valid settings for the device.

Paged or Global: Paged

Data Length in Bytes: 1

Data Format: Bit Field

Type: R/W

Default Value: 08h

COMMAND	OPERATION (01h)							
Format	Bit Field							
Bit Position	7	6	5	4	3	2	1	0
Access	R/W	R/W	R/W	R/W	R/W	R/W	R/W	R/W
Function	See Following Table							
Default Value	0	0	0	0	1	0	0	0

BIT NUMBER	PURPOSE	BIT VALUE	MEANING
Bits 7:6	Enable/Disable	00	Immediate off (decay)
		01	Soft-off (Use TOFF_DELAY and TOFF_FALL)
		10	On
Bits 5:4	V_{OUT} Source	00	VOUT_COMMAND
		01	VOUT_MARGIN_LOW
		10	VOUT_MARGIN_HIGH
		11	Not used
Bits 3:2	Margin Response	10	Act on faults
Bit 1:0	Not Used	0	Not used

ON_OFF_CONFIG (02h)

Definition: Configures the interpretation of the OPERATION command and the ENABLE pin (EN).

Paged or Global: Global

Data Length in Bytes: 1

Data Format: Bit Field

Type: R/W

Default Value: 16h (ENABLE pin control)

COMMAND	ON_OFF_CONFIG (02h)							
Format	Bit Field							
Bit Position	7	6	5	4	3	2	1	0
Access	R/W	R/W	R/W	R/W	R/W	R/W	R/W	R/W
Function	See Following Table							
Default Value	0	0	0	0	0	0	0	0

BIT NUMBER	PURPOSE	BIT VALUE	MEANING
7:5	Not Used	000	Not Used
4:2	Sets the Source of Enable	000	Device always enabled regardless of pin or OPERATION command state
		101	Device starts from Enable pin only
		110	Device starts from OPERATION command only
		111	Device starts from OPERATION command AND Enable pin
1	Enable Pin Polarity	1	Active high only
0	Enable Pin Turn-Off Action	1	Turn off immediately with decay
		0	Use programmed TOFF_DELAY and TOFF_FALL settings

CLEAR_FAULTS (03h)

Definition: Clears all fault bits in all registers and releases the SALRT pin (if asserted) simultaneously. If a fault condition still exits, the bit will reassert immediately. This command will not restart a device if it is shut down, it will only clear the faults.

Paged or Global: Global

Data Length in Bytes: 0

Data Format: N/A

Type: Write Only

Default Value: N/A

WRITE_PROTECT (10h)

Definition: Sets the write protection of certain configuration commands.
Paged or Global: Global
Data Length in Bytes: 1
Data Format: Bit Field
Type: R/W
Default Value: 00h (Enable all writes)

COMMAND	WRITE_PROTECT (10h)							
Format	Bit Field							
Bit Position	7	6	5	4	3:0	2	1	0
Access	R/W	R/W	R/W	R/W	R/W	R/W	R/W	R/W
Function	See Following Table							
Default Value	0	0	0	0	0	0	0	0

SETTINGS	PROTECTION
40h	Disables all writes except to WRITE_PROTECT, OPERATION, CLEAR_FAULTS, PAGE
20h	Disables all writes except all above plus ON_OFF_CONFIG and VOUT_COMMAND, VOUT_TRIM
00h	Enables all writes

NOTE: Any settings other than the three shown in table will result in an invalid data fault.

VOUT_MODE (20h)

Definition: Returns the supported V_{OUT} mode. This device only supports absolute direct mode.
Paged or Global: Global
Data Length in Bytes: 1
Data Format: Bit Field
Type: Read Only
Default Value: 40h
Units: N/A
Equation: N/A

VOUT_COMMAND (21h)

Definition: Sets the value of V_{OUT} when the OPERATION command is configured for nominal operation.
Paged or Global: Paged
Data Length in Bytes: 2
Data Format: Direct
Type: R/W
Default Value: 0384h (900mV)
Units: mV
Equation: VOUT_COMMAND = (Direct value)
Range: VOUT_MIN to VOUT_MAX

COMMAND	VOUT_COMMAND (21h)															
Format	Direct															
Bit Position	15	14	13	12	11	10	9	8	7	6	5	4	3	2	1	0
Access	R/W	R/W	R/W	R/W	R/W	R/W	R/W	R/W	R/W	R/W	R/W	R/W	R/W	R/W	R/W	R/W
Function	Unsigned Integer															
Default Value	0	0	0	0	0	0	1	1	1	0	0	0	0	1	0	0

VOUT_TRIM (22h)

Definition: Sets a fixed trim voltage to the output voltage command value. This command is typically used to calibrate a device in the application circuit.

Paged or Global: Paged

Data Length in Bytes: 2

Data Format: Direct

Type: R/W

Default Value: 0000h (0mV)

Units: mV

Equation: VOUT_TRIM = (Direct value)

Range: ±250mV

COMMAND	VOUT_TRIM (22h)															
Format	Direct															
Bit Position	15	14	13	12	11	10	9	8	7	6	5	4	3	2	1	0
Access	R/W	R/W	R/W	R/W	R/W	R/W	R/W	R/W	R/W	R/W	R/W	R/W	R/W	R/W	R/W	R/W
Function	Two's Complement Integer															
Default Value	0	0	0	0	0	0	0	0	0	0	0	0	0	0	0	0

VOUT_MAX (24h)

Definition: Sets the maximum allowed V_{OUT} target regardless of any other commands or combinations.

Paged or Global: Paged

Data Length in Bytes: 2

Data Format: Direct

Type: R/W

Default Value: 08FCh (2300mV)

Units: mV

Equation: VOUT_MAX = (Direct value)

Range: 0mV to 3300mV

COMMAND	VOUT_MAX (24h)															
Format	Direct															
Bit Position	15	14	13	12	11	10	9	8	7	6	5	4	3	2	1	0
Access	R/W	R/W	R/W	R/W	R/W	R/W	R/W	R/W	R/W	R/W	R/W	R/W	R/W	R/W	R/W	R/W
Function	Unsigned Integer															
Default Value	0	0	0	0	1	0	0	0	1	1	1	1	1	1	0	0

VOUT_MARGIN_HIGH (25h)

Definition: Sets the value of V_{OUT} when the OPERATION command is configured for margin high.
Paged or Global: Paged
Data Length in Bytes: 2
Data Format: Direct
Type: R/W
Default Value: 0640h (1600mV)
Units: mV
Equation: VOUT_MARGIN_HIGH = (Direct value)
Range: VOUT_MIN to VOUT_MAX

COMMAND	VOUT_MARGIN_HIGH (25h)															
Format	Direct															
Bit Position	15	14	13	12	11	10	9	8	7	6	5	4	3	2	1	0
Access	R/W	R/W	R/W	R/W	R/W	R/W	R/W	R/W	R/W	R/W	R/W	R/W	R/W	R/W	R/W	R/W
Function	Unsigned Integer															
Default Value	0	0	0	0	0	1	1	0	0	1	0	0	0	0	0	0

VOUT_MARGIN_LOW (26h)

Definition: Sets the value of V_{OUT} when the OPERATION command is configured for margin low.
Paged or Global: Paged
Data Length in Bytes: 2
Data Format: Direct
Type: R/W
Default Value: 00FAh (250mV)
Units: mV
Equation: VOUT_MARGIN_LOW = (Direct value)
Range: VOUT_MIN to VOUT_MAX

COMMAND	VOUT_MARGIN_LOW (26h)															
Format	Direct															
Bit Position	15	14	13	12	11	10	9	8	7	6	5	4	3	2	1	0
Access	R/W	R/W	R/W	R/W	R/W	R/W	R/W	R/W	R/W	R/W	R/W	R/W	R/W	R/W	R/W	R/W
Function	Unsigned Integer															
Default Value	0	0	0	0	0	0	0	0	1	1	1	1	1	0	1	0

VOUT_TRANSITION_RATE (27h)

Definition: Sets the output voltage rate of change during regulation. Changes to this setting require a write to the APPLY_SETTINGS command before the change will take effect.
Paged or Global: Paged
Data Length in Bytes: 2
Data Format: Direct
Type: R/W
Default Value: 0064h (10mV/µs)
Units: µV/µs
Equation: VOUT_TRANSITION_RATE = (Direct value)*100
Range: 100µV/µs to 100mV/µs

COMMAND	VOUT_TRANSITION_RATE (27h)															
Format	Direct															
Bit Position	15	14	13	12	11	10	9	8	7	6	5	4	3	2	1	0
Access	R/W	R/W	R/W	R/W	R/W	R/W	R/W	R/W	R/W	R/W	R/W	R/W	R/W	R/W	R/W	R/W
Function	Unsigned Integer															
Default Value	0	0	0	0	0	0	0	0	0	1	1	0	0	1	0	0

VOUT_DROOP (28h)

Definition: Sets the output voltage rate of change during regulation. Changes to this setting require a write to the APPLY_SETTINGS command before the change will take effect.
Paged or Global: Paged
Data Length in Bytes: 2
Data Format: Direct
Type: R/W
Default Value: 0000h (0µV/A)
Units: µV/A
Equation: VOUT_DROOP = (Direct value)*10
Range: 0mV/A to 16mV/A

COMMAND	VOUT_DROOP (28h)															
Format	Direct															
Bit Position	15	14	13	12	11	10	9	8	7	6	5	4	3	2	1	0
Access	R/W	R/W	R/W	R/W	R/W	R/W	R/W	R/W	R/W	R/W	R/W	R/W	R/W	R/W	R/W	R/W
Function	Unsigned Integer															
Default Value	0	0	0	0	0	0	0	0	0	0	0	0	0	0	0	0

VOUT_MIN (2Bh)

Definition: Sets the minimum allowed V_{OUT} target regardless of any other commands or combinations.
Paged or Global: Paged
Data Length in Bytes: 2
Data Format: Direct
Type: R/W
Default Value: 0000h (0mV)
Units: mV
Equation: VOUT_MIN = (Direct value)
Range: 0V to VOUT_MAX

COMMAND	VOUT_MIN (2Bh)															
Format	Direct															
Bit Position	15	14	13	12	11	10	9	8	7	6	5	4	3	2	1	0
Access	R/W	R/W	R/W	R/W	R/W	R/W	R/W	R/W	R/W	R/W	R/W	R/W	R/W	R/W	R/W	R/W
Function	Unsigned Integer															
Default Value	0	0	0	0	0	0	0	0	0	0	0	0	0	0	0	0

VOUT_OV_FAULT_LIMIT (40h)

Definition: Sets the output overvoltage fault threshold. Changes to this setting require a write to the APPLY_SETTINGS command before the change will take effect.
Paged or Global: Paged
Data Length in Bytes: 2
Data Format: Direct
Type: R/W
Default Value: 076Ch (1900mV)
Units: mV
Equation: VOUT_OV_FAULT_LIMIT = (Direct value)
Range: 0V to VOUT_MAX

COMMAND	VOUT_OV_FAULT_LIMIT (40h)															
Format	Direct															
Bit Position	15	14	13	12	11	10	9	8	7	6	5	4	3	2	1	0
Access	R/W	R/W	R/W	R/W	R/W	R/W	R/W	R/W	R/W	R/W	R/W	R/W	R/W	R/W	R/W	R/W
Function	Unsigned Integer															
Default Value	0	0	0	0	0	1	1	1	0	1	1	0	1	1	0	0

VOUT_UV_FAULT_LIMIT (44h)

Definition: Sets the V_{OUT} undervoltage fault threshold. This fault is masked during ramp or when disabled.
Paged or Global: Paged
Data Length in Bytes: 2
Data Format: Direct
Type: R/W
Default Value: 0000h (0mV)
Units: mV
Equation: VOUT_UV_FAULT_LIMIT = (Direct value)
Range: 0V to VOUT_MAX

COMMAND	VOUT_UV_FAULT_LIMIT (44h)															
Format	Direct															
Bit Position	15	14	13	12	11	10	9	8	7	6	5	4	3	2	1	0
Access	R/W	R/W	R/W	R/W	R/W	R/W	R/W	R/W	R/W	R/W	R/W	R/W	R/W	R/W	R/W	R/W
Function	Unsigned Integer															
Default Value	0	0	0	0	0	0	0	0	0	0	0	0	0	0	0	0

OT_FAULT_LIMIT (4Fh)

Definition: Sets the power stage over-temperature fault limit.
Paged or Global: Paged
Data Length in Bytes: 2
Data Format: Direct
Type: R/W
Default Value: 007Dh (+125°C)
Units: °C
Equation: OT_FAULT_LIMIT = (Direct value)
Range: 0°C to +2000°C

COMMAND	OT_FAULT_LIMIT (4Fh)															
Format	Direct															
Bit Position	15	14	13	12	11	10	9	8	7	6	5	4	3	2	1	0
Access	R/W	R/W	R/W	R/W	R/W	R/W	R/W	R/W	R/W	R/W	R/W	R/W	R/W	R/W	R/W	R/W
Function	Two's Complement Integer															
Default Value	0	0	0	0	0	0	0	0	0	1	1	1	1	1	0	1

OT_WARN_LIMIT (51h)

Definition: Sets the system over-temperature warn limit. If any measured temperature exceeds this value, the device will:

- Set the TEMPERATURE bit in STATUS_BYTE and STATUS_WORD
- Set the OT_WARNING bit in STATUS_TEMPERATURE
- Set the SALRT pin
- Set the TWARN pin

Paged or Global: Paged
Data Length in Bytes: 2
Data Format: Direct
Type: R/W
Default Value: 07D0h (+2000°C)
Units: °C
Equation: OT_WARN_LIMIT = (Direct value)
Range: 0°C to +2000°C

COMMAND	OT_WARN_LIMIT (51h)															
Format	Direct															
Bit Position	15	14	13	12	11	10	9	8	7	6	5	4	3	2	1	0
Access	R/W	R/W	R/W	R/W	R/W	R/W	R/W	R/W	R/W	R/W	R/W	R/W	R/W	R/W	R/W	R/W
Function	Two's Complement Integer															
Default Value	0	0	0	0	0	1	1	1	1	1	0	1	0	0	0	0

VIN_OV_FAULT_LIMIT (55h)

Definition: Sets the V_{IN} overvoltage fault threshold. Changes to this setting require a write to the APPLY_SETTINGS command before the change will take effect.
Paged or Global: Global
Data Length in Bytes: 2
Data Format: Direct
Type: R/W
Default Value: 36B0h (14,000mV)
Units: mV
Equation: VIN_OV_FAULT_LIMIT = (Direct value)
Range: 0mV to 16,000mV

COMMAND	VIN_OV_FAULT_LIMIT (55h)															
Format	Direct															
Bit Position	15	14	13	12	11	10	9	8	7	6	5	4	3	2	1	0
Access	R/W	R/W	R/W	R/W	R/W	R/W	R/W	R/W	R/W	R/W	R/W	R/W	R/W	R/W	R/W	R/W
Function	Unsigned Integer															
Default Value	0	0	1	1	0	1	1	0	1	0	1	1	0	0	0	0

VIN_UV_FAULT_LIMIT (59h)

Definition: Sets the V_{IN} undervoltage fault threshold. Also referred to as Undervoltage Lockout (UVLO). Changes to this setting require a write to the APPLY_SETTINGS command before the change will take effect.

Paged or Global: Global

Data Length in Bytes: 2

Data Format: Direct

Type: R/W

Default Value: 1F40h (8,000mV)

Units: mV

Equation: VIN_UV_FAULT_LIMIT = (Direct value)

Range: 0mV to 16,000mV

COMMAND	VIN_UV_FAULT_LIMIT (59h)															
Format	Direct															
Bit Position	15	14	13	12	11	10	9	8	7	6	5	4	3	2	1	0
Access	R/W	R/W	R/W	R/W	R/W	R/W	R/W	R/W	R/W	R/W	R/W	R/W	R/W	R/W	R/W	R/W
Function	Unsigned Integer															
Default Value	0	0	0	1	1	1	1	1	0	1	0	0	0	0	0	0

IIN_OC_FAULT_LIMIT (5Bh)

Definition: Sets the I_{IN} overcurrent fault threshold. Changes to this setting require a write to the APPLY_SETTINGS command before the change will take effect.

Paged or Global: Global

Data Length in Bytes: 2

Data Format: Direct

Type: R/W

Default Value: 0032h (50A)

Units: A

Equation: IIN_OC_FAULT_LIMIT = (Direct value)

Range: 0A to 50A

COMMAND	IIN_OC_FAULT_LIMIT (5Bh)															
Format	Direct															
Bit Position	15	14	13	12	11	10	9	8	7	6	5	4	3	2	1	0
Access	R/W	R/W	R/W	R/W	R/W	R/W	R/W	R/W	R/W	R/W	R/W	R/W	R/W	R/W	R/W	R/W
Function	Unsigned Integer															
Default Value	0	0	0	0	0	0	0	0	0	0	1	1	0	0	1	0

TON_DELAY (60h)

Definition: Sets the delay time of V_{OUT} during enable.
Paged or Global: Paged
Data Length in Bytes: 2
Data Format: Direct
Type: R/W
Default Value: 0014h (200µs)
Units: µs
Equation: TON_DELAY = (Direct value)*10
Range: 200µs to 655,340µs

COMMAND	TON_DELAY (60h)															
Format	Direct															
Bit Position	15	14	13	12	11	10	9	8	7	6	5	4	3	2	1	0
Access	R/W	R/W	R/W	R/W	R/W	R/W	R/W	R/W	R/W	R/W	R/W	R/W	R/W	R/W	R/W	R/W
Function	Unsigned Integer															
Default Value	0	0	0	0	0	0	0	0	0	0	0	1	0	1	0	0

TON_RISE (61h)

Definition: Sets the rise time of V_{OUT} during enable. Changes to this setting require a write to the APPLY_SETTINGS command before the change will take effect. This function uses the value of V_{OUT} to calculate rise time, so APPLY_SETTINGS must be sent after any change to the V_{OUT} target for accurate rise time.
Paged or Global: Paged
Data Length in Bytes: 2
Data Format: Direct
Type: R/W
Default Value: 01F4h (500µs)
Units: µs
Equation: TON_RISE = (Direct value)
Range: 0µs to 10,000µs

COMMAND	TON_RISE (61h)															
Format	Direct															
Bit Position	15	14	13	12	11	10	9	8	7	6	5	4	3	2	1	0
Access	R/W	R/W	R/W	R/W	R/W	R/W	R/W	R/W	R/W	R/W	R/W	R/W	R/W	R/W	R/W	R/W
Function	Unsigned Integer															
Default Value	0	0	0	0	0	0	0	1	1	1	1	1	0	1	0	0

TOFF_DELAY (64h)

Definition: Sets the delay time of V_{OUT} during disable.
Paged or Global: Paged
Data Length in Bytes: 2
Data Format: Direct
Type: R/W
Default Value: 0000h (0µs)
Units: µs
Equation: TOFF_DELAY = (Direct value) * 10
Range: 0µs to 10,000µs

COMMAND	TOFF_DELAY (64h)															
Format	Direct															
Bit Position	15	14	13	12	11	10	9	8	7	6	5	4	3	2	1	0
Access	R/W	R/W	R/W	R/W	R/W	R/W	R/W	R/W	R/W	R/W	R/W	R/W	R/W	R/W	R/W	R/W
Function	Unsigned Integer															
Default Value	0	0	0	0	0	0	0	0	0	0	0	0	0	0	0	0

TOFF_FALL (65h)

Definition: Sets the fall time of V_{OUT} during disable. Changes to this setting require a write to the APPLY_SETTINGS command before the change will take effect. This function uses the value of V_{OUT} to calculate fall time, so APPLY_SETTINGS must be sent after any change to the V_{OUT} target for accurate fall time.
Paged or Global: Paged
Data Length in Bytes: 2
Data Format: Direct
Type: R/W
Default Value: 01F4h (500µs)
Units: µs
Equation: TOFF_FALL = (Direct value)
Range: 0 to 10,000µs

COMMAND	TOFF_FALL (65h)															
Format	Direct															
Bit Position	15	14	13	12	11	10	9	8	7	6	5	4	3	2	1	0
Access	R/W	R/W	R/W	R/W	R/W	R/W	R/W	R/W	R/W	R/W	R/W	R/W	R/W	R/W	R/W	R/W
Function	Unsigned Integer															
Default Value	0	0	0	0	0	0	0	1	1	1	1	1	0	1	0	0

STATUS_BYTE (78h)

Definition: Returns a summary of the unit's fault status. Based on the information in this byte, the host can get more information by reading the appropriate status registers. A fault in either output will be reported here.

Paged or Global: Global

Data Length in Bytes: 2

Data Format: Bit Field

Type: Read Only

Default Value: N/A

COMMAND	STATUS_BYTE (78h)							
Format	Bit Field							
Bit Position	7	6	5	4	3	2	1	0
Access	R	R	R	R	R	R	R	R
Function	See Following Table							

BIT NUMBER	STATUS BIT NAME	MEANING
7	Not Used	Not used
6	OFF	This bit is asserted if the unit is not providing power to the output, regardless of the reason, including simply not being enabled.
5	VOUT_OV_FAULT	An output overvoltage fault has occurred.
4	IOUT_OC_FAULT	An output overcurrent fault has occurred.
3	VIN_UV_FAULT	An input undervoltage fault has occurred.
2	TEMPERATURE	A temperature fault or warning has occurred.
1	CML	A communications, memory, or logic fault has occurred.
0	None of the Above	A status change other than those listed above has occurred.

STATUS_WORD (79h)

Definition: Returns a summary of the device's fault status. Based on the information in these bytes, the host can get more information by reading the appropriate status registers. A fault in either output will be reported here. The low byte of the STATUS_WORD contains the same information as the STATUS_BYTE (78h) command.

Paged or Global: Global

Data Length in Bytes: 2

Data Format: Bit Field

Type: Read Only

Default Value: N/A

COMMAND	STATUS_WORD (79h)															
Format	Bit Field															
Bit Position	15	14	13	12	11	10	9	8	7	6	5	4	3	2	1	0
Access	R	R	R	R	R	R	R	R	R	R	R	R	R	R	R	R
Function	See Following Table															

BIT NUMBER	STATUS BIT NAME	MEANING
15	V_{OUT}	An output voltage fault has occurred.
14	IOUT	An output current fault has occurred.
13	INPUT	An input voltage fault has occurred.
12	MFR_SPECIFIC	A manufacturer specific event has occurred.
11	POWER_GOOD #	The POWER_GOOD signal, if present, is negated. (Note 8)
10:7	Not Used	Not used
6	OFF	This bit is asserted if the unit is not providing power to the output, regardless of the reason, including simply not being enabled.
5	VOUT_OV_FAULT	An output overvoltage fault has occurred.
4	IOUT_OC_FAULT	An output overcurrent fault has occurred.
3	VIN_UV_FAULT	An input undervoltage fault has occurred.
2	TEMPERATURE	A temperature fault or warning has occurred.
1	CML	A communications, memory, or logic fault has occurred.
0	None of the Above	A status change other than those listed above has occurred.

NOTE:

8. If the POWER_GOOD# bit is set, this indicates that the POWER_GOOD signal, if present, is signaling that the output power is not good.

STATUS_VOUT (7Ah)

Definition: Returns a summary of output voltage faults.
Paged or Global: Paged
Data Length in Bytes: 1
Data Format: Bit Field
Type: Read Only
Default Value: N/A

COMMAND	STATUS_VOUT (7Ah)							
Format	Bit Field							
Bit Position	7	6	5	4	3	2	1	0
Access	R	R	R	R	R	R	R	R
Function	See Following Table							

BIT NUMBER	STATUS BIT NAME	MEANING
7	VOUT_OV_FAULT	Indicates an output overvoltage fault.
6:5	Not Used	Not used
4	VOUT_UV_FAULT	Indicates an output undervoltage fault.
3	VOUT_MAX Warning	Indicates an output voltage maximum warning.
2:0	Not Used	Not used

STATUS_IOUT (7Bh)

Definition: Returns a summary of output current faults.
Paged or Global: Paged
Data Length in Bytes: 1
Data Format: Bit Field
Type: Read Only
Default Value: N/A

COMMAND	STATUS_IOUT (7Bh)							
Format	Bit Field							
Bit Position	7	6	5	4	3	2	1	0
Access	R	R	R	R	R	R	R	R
Function	See Following Table							

BIT NUMBER	MEANING
7	An output overcurrent fault has occurred.
6	An output overcurrent and undervoltage fault has occurred.
5:4	Not used
3	A current share fault has occurred.
2:0	Not used

STATUS_INPUT (7Ch)

Definition: Returns a summary of input voltage faults.
Paged or Global: Global
Data Length in Bytes: 1
Data Format: Bit Field
Type: Read Only
Default Value: N/A

COMMAND	STATUS_INPUT (7Ch)							
Format	Bit Field							
Bit Position	7	6	5	4	3	2	1	0
Access	R	R	R	R	R	R	R	R
Function	See Following Table							

BIT NUMBER	MEANING
7	An input overvoltage fault has occurred.
6:5	Not used
4	An input undervoltage fault has occurred. This fault is initially masked until V_{IN} exceeds the UV threshold.
3	Not used
2	An input overcurrent fault has occurred.
1:0	Not used

STATUS_TEMPERATURE (7Dh)

Definition: Returns a summary of temperature related faults.
Paged or Global: Global
Data Length in Bytes: 1
Data Format: Bit Field
Type: Read Only
Default Value: N/A

COMMAND	STATUS_TEMPERATURE (7Dh)							
Format	Bit Field							
Bit Position	7	6	5	4	3	2	1	0
Access	R	R	R	R	R	R	R	R
Function	See Following Table							

BIT NUMBER	MEANING
7	An over-temperature fault has occurred.
6	An over-temperature warning has occurred.
5	Not used
4	An under-temperature fault has occurred.
3:0	Not used

STATUS_CML (7Eh)

Definition: Returns a summary of any communications, logic, and/or memory errors.
Paged or Global: Global
Data Length in Bytes: 1
Data Format: Bit Field
Type: Read Only
Default Value: N/A

COMMAND	STATUS_CML (7Eh)							
Format	Bit Field							
Bit Position	7	6	5	4	3	2	1	0
Access	R	R	R	R	R	R	R	R
Function	See Following Table							

BIT NUMBER	MEANING
7	Invalid or unsupported PMBus Command was received.
6	The PMBus command was sent with invalid or unsupported data.
5	A packet error was detected in the PMBus command.
4	Memory fault detected.
3	Processor fault detected.
2	Not used
1	A communication fault other than the ones listed in this table has occurred.
0	A memory or logic fault not listed above was detected.

STATUS_MFR_SPECIFIC (80h)

Definition: Returns the status of specific information detailed as follows.
Paged or Global: Global
Data Length in Bytes: 1
Data Format: Bit Field
Type: Read Only
Default Value: N/A

COMMAND	STATUS_MFR_SPECIFIC (80h)							
Format	Bit Field							
Bit Position	7	6	5	4	3	2	1	0
Access	R	R	R	R	R	R	R	R
Function	See Following Table							

BIT	MEANING
7:2	Not used
1	OTP NVM memory is full.
0	Not used

READ_VIN (88h)

Definition: Returns the input voltage reading.
Paged or Global: Global
Data Length in Bytes: 2
Data Format: Direct
Type: Read Only
Default Value: N/A
Units: mV
Equation: READ_VIN = (Direct value)

COMMAND	READ_VIN (88h)															
Format	Direct															
Bit Position	15	14	13	12	11	10	9	8	7	6	5	4	3	2	1	0
Access	R	R	R	R	R	R	R	R	R	R	R	R	R	R	R	R
Function	Two's Complement Integer															

READ_IIN (89h)

Definition: Returns the input current reading.
Paged or Global: Global
Data Length in Bytes: 2
Data Format: Direct
Type: Read Only
Default Value: N/A
Units: A
Equation: READ_IIN = (Direct value)/100

COMMAND	READ_IIN (89h)															
Format	Direct															
Bit Position	15	14	13	12	11	10	9	8	7	6	5	4	3	2	1	0
Access	R	R	R	R	R	R	R	R	R	R	R	R	R	R	R	R
Function	Two's Complement Integer															

READ_VOUT (8Bh)

Definition: Returns the output voltage reading.
Paged or Global: Paged
Data Length in Bytes: 2
Data Format: Direct
Type: Read Only
Default Value: N/A
Units: mV
Equation: READ_VOUT = (Direct value)

COMMAND	READ_VOUT (8Bh)															
Format	Direct															
Bit Position	15	14	13	12	11	10	9	8	7	6	5	4	3	2	1	0
Access	R	R	R	R	R	R	R	R	R	R	R	R	R	R	R	R
Function	Two's Complement Integer															

READ_IOUT (8Ch)

Definition: Returns the output current reading.
Paged or Global: Paged
Data Length in Bytes: 2
Data Format: Direct
Type: Read Only
Default Value: N/A
Units: A
Equation: READ_IOUT = (Direct value)/10

COMMAND	READ_IOUT (8Ch)															
Format	Direct															
Bit Position	15	14	13	12	11	10	9	8	7	6	5	4	3	2	1	0
Access	R	R	R	R	R	R	R	R	R	R	R	R	R	R	R	R
Function	Two's Complement Integer															

READ_TEMPERATURE_1 (8Dh)

Definition: Returns the temperature reading of the power stage.
Paged or Global: Paged
Data Length in Bytes: 2
Data Format: Direct
Type: Read Only
Default Value: N/A
Units: °C
Equation: READ_TEMPERATURE_1 = (Direct value)

COMMAND	READ_TEMPERATURE_1 (8Dh)															
Format	Direct															
Bit Position	15	14	13	12	11	10	9	8	7	6	5	4	3	2	1	0
Access	R	R	R	R	R	R	R	R	R	R	R	R	R	R	R	R
Function	Two's Complement Integer															

READ_TEMPERATURE_2 (8Eh)

Definition: Returns the temperature reading from a remote diode connected to TMON0 when configured for diode sensing.
Paged or Global: Global
Data Length in Bytes: 2
Data Format: Direct
Type: Read Only
Default Value: N/A
Units: °C
Equation: READ_TEMPERATURE_2 = (Direct value)

COMMAND	READ_TEMPERATURE_2 (8Eh)															
Format	Direct															
Bit Position	15	14	13	12	11	10	9	8	7	6	5	4	3	2	1	0
Access	R	R	R	R	R	R	R	R	R	R	R	R	R	R	R	R
Function	Two's Complement Integer															

READ_TEMPERATURE_3 (8Fh)

Definition: Returns the temperature reading from a remote diode connected to TMON1 when configured for diode sensing.
Paged or Global: Global
Data Length in Bytes: 2
Data Format: Direct
Type: Read Only
Default Value: N/A
Units: °C
Equation: READ_TEMPERATURE_3 = (Direct value)

COMMAND	READ_TEMPERATURE_3 (8Fh)															
Format	Direct															
Bit Position	15	14	13	12	11	10	9	8	7	6	5	4	3	2	1	0
Access	R	R	R	R	R	R	R	R	R	R	R	R	R	R	R	R
Function	Two's Complement Integer															

READ_POUT (96h)

Definition: Returns the output power.
Paged or Global: Paged
Data Length in Bytes: 2
Data Format: Direct
Type: Read Only
Default Value: N/A
Units: W
Equation: READ_POUT = (Direct value)

COMMAND	READ_POUT (96h)															
Format	Direct															
Bit Position	15	14	13	12	11	10	9	8	7	6	5	4	3	2	1	0
Access	R	R	R	R	R	R	R	R	R	R	R	R	R	R	R	R
Function	Two's Complement Integer															

READ_PIN (97h)

Definition: Returns the input power.
Paged or Global: Global
Data Length in Bytes: 2
Data Format: Direct
Type: Read Only
Default Value: N/A
Units: W
Equation: READ_PIN = (Direct value)

COMMAND	READ_PIN (97h)															
Format	Direct															
Bit Position	15	14	13	12	11	10	9	8	7	6	5	4	3	2	1	0
Access	R	R	R	R	R	R	R	R	R	R	R	R	R	R	R	R
Function	Two's Complement Integer															

PMBUS_REVISION (98h)

Definition: Returns the revision of the PMBus Specification to which the device is compliant.
Data Length in Bytes: 1
Data Format: Bit Field
Type: Read Only
Default Value: 33h (Part 1 Revision 1.3, Part 2 Revision 1.3)

COMMAND	PMBUS_REVISION (98h)							
Format	Bit Field							
Bit Position	7	6	5	4	3	2	1	0
Access	R	R	R	R	R	R	R	R
Function	See Following Table							
Default Value	0	0	1	1	0	0	1	1

BITS 7:4	PART 1 REVISION	BITS 3:0	PART 2 REVISION
0000	1.0	0000	1.0
0001	1.1	0001	1.1
0010	1.2	0010	1.2
0011	1.3	0011	1.3

IC_DEVICE_ID (ADh)

Definition: Returns device identification information.
Paged or Global: Global
Data Length in Bytes: 4
Data Format: Bit Field
Type: Block Read
Default Value: 49D22800h

COMMAND	IC_DEVICE_ID (ADh)			
Format	Block Read			
Byte Position	3	2	1	0
Function	MFR Code	ID High Byte	ID Low Byte	Reserved
Default Value	49h	D2h	28h	00h

IC_DEVICE_REV (AEh)

Definition: Returns device revision information.
Paged or Global: Global
Data Length in Bytes: 4
Data Format: Bit Field
Type: Block Read
Default Value: N/A

COMMAND	IC_DEVICE_REV (AEh)			
Format	Block Read			
Bit Position	23:16	15:8	7:4	3:0
Function	Firmware Revision	Factory Configuration	Chip Foundry Site	IC Revision
Default Value	N/A	N/A	N/A	N/A

APPLY_SETTINGS (E7h)

Definition: Instructs the controller to use new PMBus parameters. Send 01h to this command after making one or more changes to certain PMBus threshold commands that require rescaling of operational values. The commands that require this are VOUT_TRANSITION_RATE, VOUT_DROOP, VOUT_OV_FAULT_LIMIT, VIN_OV_FAULT_LIMIT, VIN_UV_FAULT_LIMIT, IIN_OC_FAULT_LIMIT, TON_RISE, and TOFF_FALL.

Paged or Global: Global

Data Length in Bytes: 2

Data Format: Bit Field

Type: Write Only

Default Value: 01h

RESTORE_CONFIG (F2h)

Definition: Identifies the configuration to be restored from NVM and loads the store's settings into the device's active memory. This command must only be sent while the outputs are disabled.

Paged or Global: Global

Data Length in Bytes: 1

Data Format: BIT

Type: Write Only

Default Value: N/A

COMMAND	RESTORE_CONFIG (F2h)							
Format	Bit Field							
Bit Position	7	6	5	4	3	2	1	0
Access	R/W	R/W	R/W	R/W	R/W	R/W	R/W	R/W
Function	See Following Table							
Default Value	N/A	N/A	N/A	N/A	N/A	N/A	N/A	N/A

BIT NUMBER	STATUS BIT NAME	MEANING
7:4	Reserved	Reserved
3:0	CONFIG	Selected configuration to restore

Revision History

The revision history provided is for informational purposes only and is believed to be accurate, but not warranted. Please visit our website to make sure you have the latest revision.

DATE	REVISION	CHANGE
Jun 26, 2017	FN8748.1	Applied new header and footer. Updated “READ_PIN (97h)” on page 43, changed “Paged” to “Global”. Updated the “About Intersil” section. Updated Figure 5 on page 9. Updated “Enable (EN0 and EN1) Input High Level” on page 10. Removed the typical value and added a minimum value of 2.55V. Added an entry for “Enable (EN0 and EN1) Input Low Level” on page 10 with a maximum of 0.8V. Added an entry for “SCL, SDA Input High Level” on page 11 with a minimum value of 1.55V. Removed the entry for “SCL, SDA Input High/Low Threshold”. Added an entry for “SCL, SDA Input Low Level” on page 11 with a maximum value of 0.8V. Changed “STATUS_CML” on page 22, bit 1 from “PMBus command tried to write to a read only or protected command, or a communication fault other than the ones listed in this table has occurred” to “A communication fault other than the ones listed in this table has occurred”. Changed “Two’s Complement Integer” to “Unsigned Integer” for the following PMBus commands: - VOUT_COMMAND - VOUT_MAX - VOUT_MARGIN_HIGH - VOUT_MARGIN_LOW - VOUT_TRANSITION_RATE - VOUT_DROOP - VOUT_MIN - VOUT_OV_FAULT_LIMIT - VOUT_UV_FAULT_LIMIT - VIN_OV_FAULT_LIMIT - VIN_UV_FAULT_LIMIT - IIN_OC_FAULT_LIMIT - TON_DELAY - TON_RISE - TOFF_DELAY - TOFF_FALL
Sep 28, 2016	FN8748.0	Initial release

About Intersil

Intersil Corporation is a leading provider of innovative power management and precision analog solutions. The company's products address some of the largest markets within the industrial and infrastructure, mobile computing, and high-end consumer markets.

For the most updated datasheet, application notes, related documentation, and related parts, see the respective product information page found at www.intersil.com.

For a listing of definitions and abbreviations of common terms used in our documents, visit www.intersil.com/glossary.

You can report errors or suggestions for improving this datasheet by visiting www.intersil.com/ask.

Reliability reports are also available from our website at www.intersil.com/support.

© Copyright Intersil Americas LLC 2016-2017. All Rights Reserved.
All trademarks and registered trademarks are the property of their respective owners.

For additional products, see www.intersil.com/en/products.html

Intersil products are manufactured, assembled and tested utilizing ISO9001 quality systems as noted in the quality certifications found at www.intersil.com/en/support/qualandreliability.html

Intersil products are sold by description only. Intersil may modify the circuit design and/or specifications of products at any time without notice, provided that such modification does not, in Intersil's sole judgment, affect the form, fit or function of the product. Accordingly, the reader is cautioned to verify that datasheets are current before placing orders. Information furnished by Intersil is believed to be accurate and reliable. However, no responsibility is assumed by Intersil or its subsidiaries for its use; nor for any infringements of patents or other rights of third parties which may result from its use. No license is granted by implication or otherwise under any patent or patent rights of Intersil or its subsidiaries.

For information regarding Intersil Corporation and its products, see www.intersil.com

Package Outline Drawing

For the most recent package outline drawing, see L48.6x6B.

L48.6x6B

48 LEAD QUAD FLAT NO-LEAD PLASTIC PACKAGE

Rev 0, 9/09

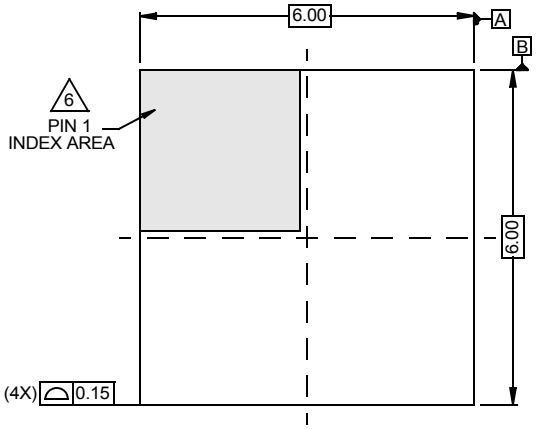

TOP VIEW

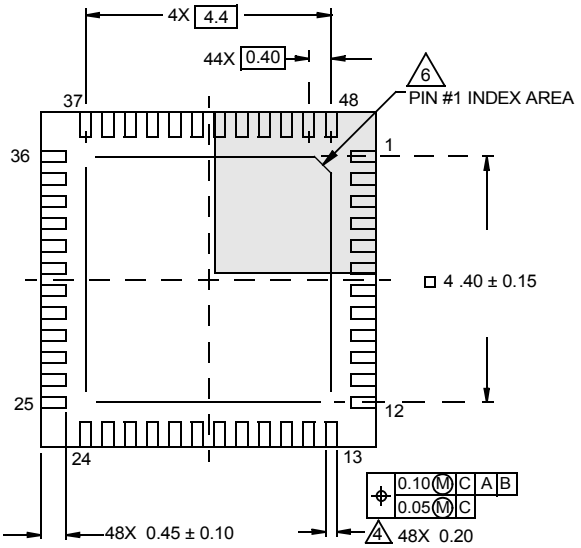

BOTTOM VIEW

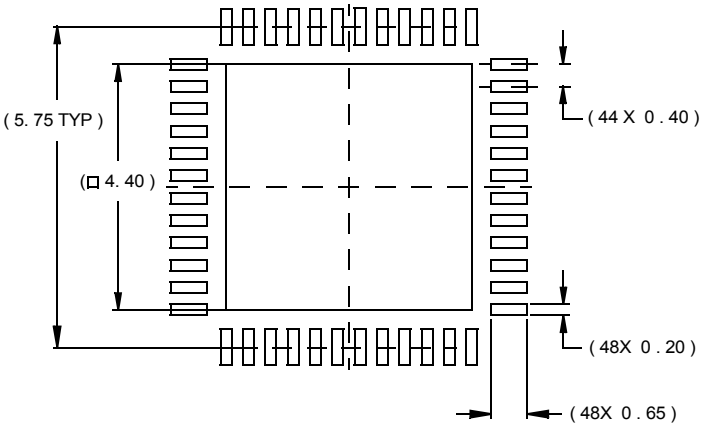

TYPICAL RECOMMENDED LAND PATTERN

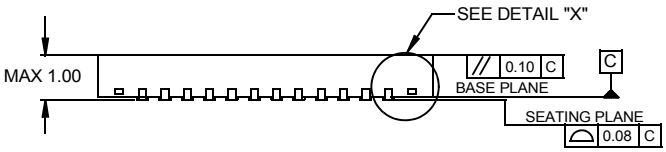

SIDE VIEW

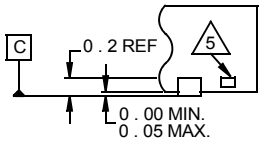

DETAIL "X"

NOTES:

1. Dimensions are in millimeters.
   Dimensions in ( ) for Reference Only.
2. Dimensioning and tolerancing conform to AMSE Y14.5m-1994.
3. Unless otherwise specified, tolerance : Decimal ± 0.05
4. Dimension applies to the metallized terminal and is measured between 0.15mm and 0.30mm from the terminal tip.
5. Tiebar shown (if present) is a non-functional feature.
6. The configuration of the pin #1 identifier is optional, but must be located within the zone indicated. The pin #1 identifier may be either a mold or mark feature.